CHAMBERLAIN®

Belt Drive Garage Door Opener

Models
HD920EV • 349544 • WD962KEV • WD962KPEV

FOR RESIDENTIAL USE ONLY

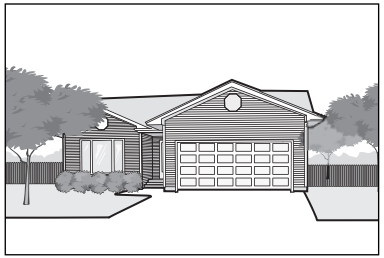

- **Please read this manual and the enclosed safety materials carefully!**
- **Fasten the manual near the garage door after installation.**
- **The door WILL NOT CLOSE unless the Protector System® is connected and properly aligned.**
- **Periodic checks of the garage door opener are required to ensure safe operation.**
- **The model number label is located on the left side panel of your garage door opener.**
- **This garage door opener is compatible with MyQ™ and Security+ 2.0™ accessories.**
- **DO NOT enable the Timer-To-Close feature if you are installing the garage door opener on a one-piece door. The Timer-To-Close is to be used ONLY with sectional doors.**

Write down the following information for future reference:

Model Number:

Serial Number:

Date of Purchase:

/ /

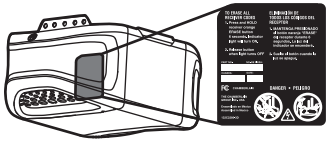

EverCharge® STANDBY POWER SYSTEM

c UL us

www.chamberlain.com

The Chamberlain Group, Inc.
845 Larch Avenue
Elmhurst, Illinois 60126-1196

CONTENTS

Preparation

Safety Symbol and Signal Word Review

This garage door opener has been designed and tested to offer safe service provided it is installed, operated, maintained and tested in strict accordance with the instructions and warnings contained in this manual.

When you see these Safety Symbols and Signal Words on the following pages, they will alert you to the possibility of ***serious injury or death*** if you do not comply with the warnings that accompany them. The hazard may come from something mechanical or from electric shock. Read the warnings carefully.

⚠ WARNING

Mechanical

⚠ WARNING

Electrical

When you see this Signal Word on the following pages, it will alert you to the possibility of damage to your garage door and/or the garage door opener if you do not comply with the cautionary statements that accompany it. Read them carefully.

CAUTION

Check the Door

1. Disable locks and remove any ropes connected to the garage door.
2. Lift the door halfway up. Release the door. If balanced, it should stay in place, supported entirely by its springs.
3. Raise and lower the door to check for binding or sticking. If your door binds, sticks, or is out of balance, call a trained door systems technician.
4. Check the seal on the bottom of the door. Any gap between the floor and the bottom of the door must not exceed 1/4 inch (6 mm). Otherwise, the safety reversal system may not work properly.
5. The opener should be installed above the center of the door. If there is a torsion spring or center bearing plate in the way of the header bracket, it may be installed within 4 feet (1.2 m) to the left or right of the door center. See Installing the Header Bracket section.

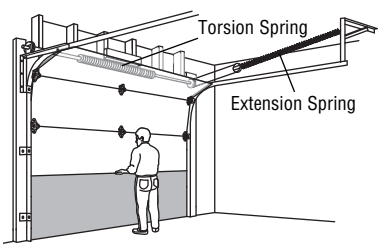

⚠ WARNING

To prevent possible SERIOUS INJURY or DEATH:

- ALWAYS call a trained door systems technician if garage door binds, sticks, or is out of balance. An unbalanced garage door may NOT reverse when required.
- NEVER try to loosen, move or adjust garage door, door springs, cables, pulleys, brackets or their hardware, ALL of which are under EXTREME tension.
- Disable ALL locks and remove ALL ropes connected to garage door BEFORE installing and operating garage door opener to avoid entanglement.

CAUTION

To prevent damage to garage door and opener:

- ALWAYS disable locks BEFORE installing and operating the opener.
- ONLY operate garage door opener at 120 V, 60 Hz to avoid malfunction and damage.

☑ Additional items you may need for installation:

Survey your garage area to see if you will need any of the following items:

☐ **A. (2) 2X4 PIECES OF WOOD**
May be used to fasten the header bracket to the structural supports. Also used to position the garage door opener during installation and for testing the safety reversing sensors.

☐ **B. SUPPORT BRACKET AND FASTENING HARDWARE**
Must be used if you have a finished ceiling in your garage.

☐ **C. EXTENSION BRACKETS (MODEL 41A5281) OR WOOD BLOCKS**
Depending upon garage construction, extension brackets or wood blocks may be needed to install the safety reversing sensor.

☐ **D. FASTENING HARDWARE**
Alternate floor mounting of the safety reversing sensor will require hardware not provided.

☐ **E. EMERGENCY KEY RELEASE (MODEL 7702CB)**
Required if you do not have an access door in addition to your garage door.

☐ **F. DOOR REINFORCEMENT**
Required if you have a lightweight steel, aluminum, fiberglass or glass panel door.

☐ **G. RAIL EXTENSION KIT**
Required if your garage door is more than 7 feet (2.13 m) high.

Overview/Carton Inventory

GARAGE DOOR OPENER ASSEMBLY

A. Header bracket
B. Pulley
C. Door bracket
D. Curved door arm
E. Straight door arm
(Packaged inside rail section)
F. Trolley
NOTE: *If the inner and outer trolley are packaged seperately, be sure to assemble the trolley before sliding onto rail.*
G. Emergency release rope and handle
H. Rail (1 front and 4 center sections)
I. Hanging brackets (2)
(Packaged inside rail section)
J. Garage door opener
K. Sprocket cover and screws
L. "U" bracket
M. Belt
N. Door control
O. White and red/white wire

The Protector System®

P. Safety reversing sensors
with 2 conductor white and white/black bell wire attached: Sending Sensor (1), Receiving Sensor (1), and Safety Sensor Brackets (2)
Q. Safety labels and literature

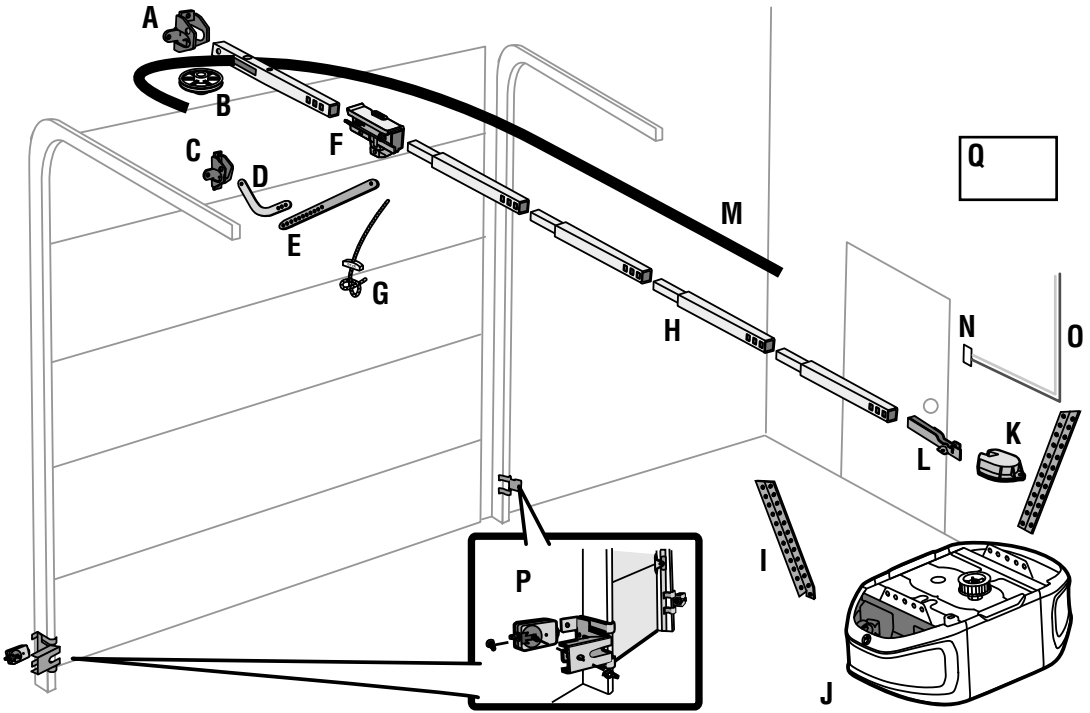

Overview/Carton Inventory

ASSEMBLY HARDWARE

H1 Threaded Shaft

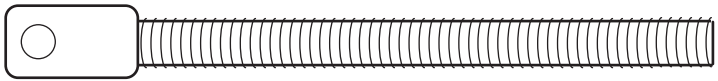

H2
Bolt 1/4"-20x1-3/4" (2)

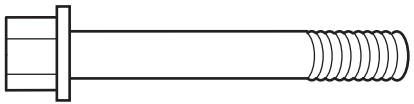

H3
Bolt

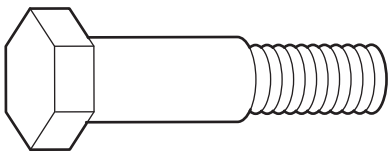

H7
Lock Washer 3/8"

H8
Spring Trolley Nut

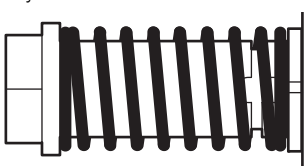

H4
Lock Nut 1/4"-20 (2)

H5
Master Link (2)

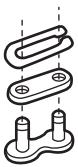

H6
Nut 3/8" (2)

H9
Hex Screw #8x3/8" (3)

INSTALLATION HARDWARE

H10
Lag Screw 5/16"-18x1-7/8" (2)

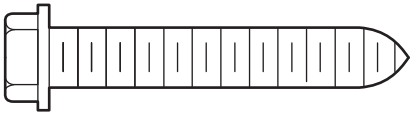

H11
Lag Screw 5/16"-9x1-5/8" (2)

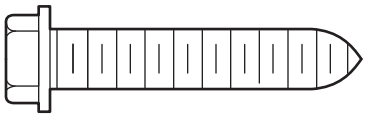

H12
Clevis Pin 5/16"x1-1/2"

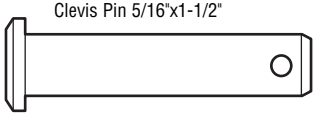

H13
Clevis Pin 5/16"x1-1/4"

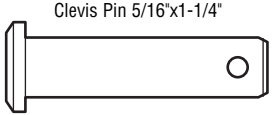

H14
Clevis Pin 5/16"x1"

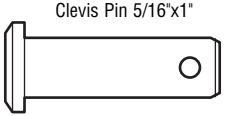

H15
Hex Bolt 5/16"-18x7/8" (4)

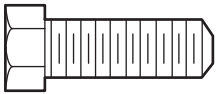

H16
Self-Threading Screw 1/4"-14x5/8" (2)

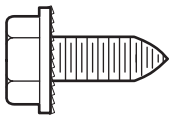

H17
Carriage Bolt 1/4"-20x1/2" (2)

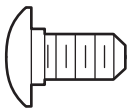

H18
Wing Nut 1/4"-20 (2)

H19
Ring Fastener (3)

H20
Nut 5/16"-18 (8)

H21
Lock Washer 5/16"-18 (8)

Overview/Carton Inventory

INCLUDED ACCESSORIES

Motion-Detecting Control Panel

Smart Control Panel®

Remote Control

NOTE: *Accessories will vary depending on the garage door opener model purchased. Depending on your specific model, other accessories may be included with your garage door opener. The instructions for these accessories will be attached to the accessory and are not included in this manual. The images throughout this manual are for reference and your product may look different.*

DOOR CONTROL HARDWARE

Screw
6ABx1-1/2" (2)

Screw
6-32x1" (2)

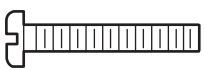

Screw
6ABx1-1/4" (2)

Drywall Anchors (2)

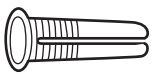

Insulated Staples (30)

Tools Needed

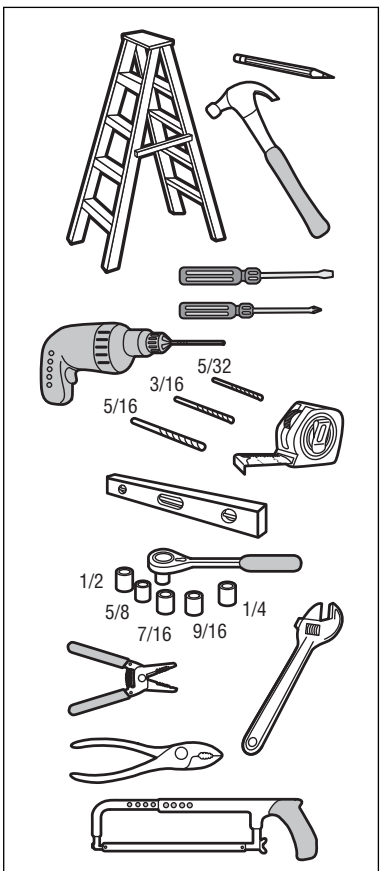

Assembly

1 Assemble the rail and trolley

CAUTION

To prevent INJURY from pinching, keep hands and fingers away from the joints while assembling the rail.

1.1 Carefully remove the straight door arm and hanging brackets packaged inside the front rail.

1.2 Align the rails on a flat surface as shown. The front rail has a cut out window near the end. Make sure that the larger hole on the front rail is facing up.

1.3 Slide the tapered end of each rail section into the larger end of the rail section in front of it. The tabs along the side will lock in place. All holes in the rail sections should face up.

1.4 Insert a screwdriver into the hole shown (this will temporarily keep the trolley from sliding off the end of the rail).

1.5 Check to make sure that the 4 plastic wear pads are inside the inner trolley. If they are missing check all the packing material and snap them back into place.

1.6 Slide the trolley along the rail toward the screwdriver.

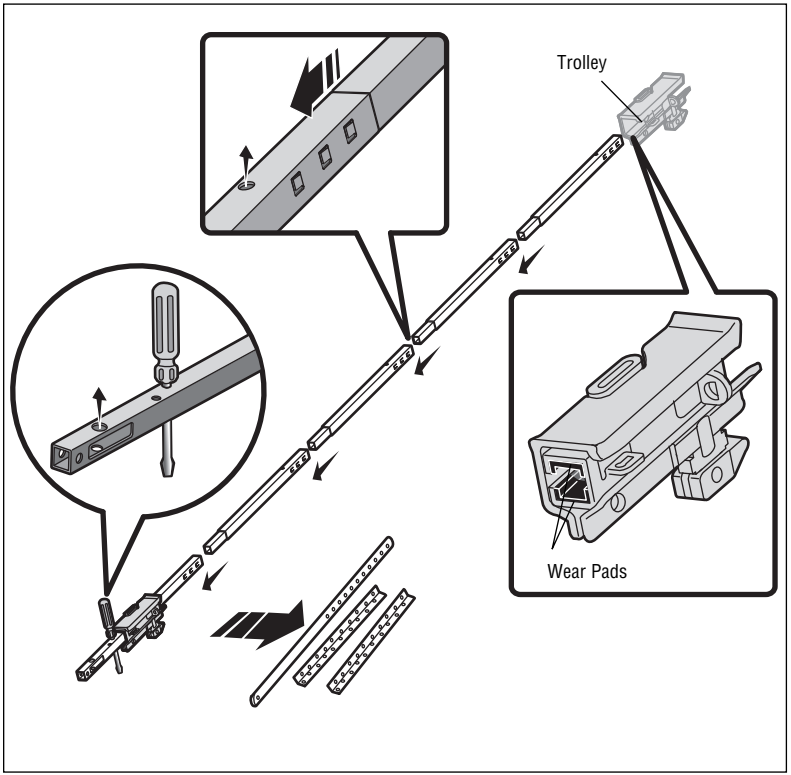

2 Fasten the rail to the garage door opener

CAUTION

To avoid SERIOUS damage to garage door opener, use ONLY those bolts/ fasteners mounted in the top of the opener.

Tip: *ONLY use the bolt removed from the garage door opener.*
Place the garage door opener on the packing material to prevent scratching.

2.1 Insert the bolt (H2) into the hole on the back end of the rail as shown. Tighten securely with the lock nut (H4). Do not overtighten.

2.2 Remove the two bolts from the top of the garage door opener.

2.3 Place the “U” bracket, flat side down onto the garage door opener and align the bracket hole with the bolt holes. Fasten the “U” bracket with the previously removed bolts.

2.4 Prop up the end of the rail on the carton to help align it with the “U” bracket.

2.5 Slide the rail onto the “U” bracket, until it reaches all the stops on the top and sides of the “U” bracket.

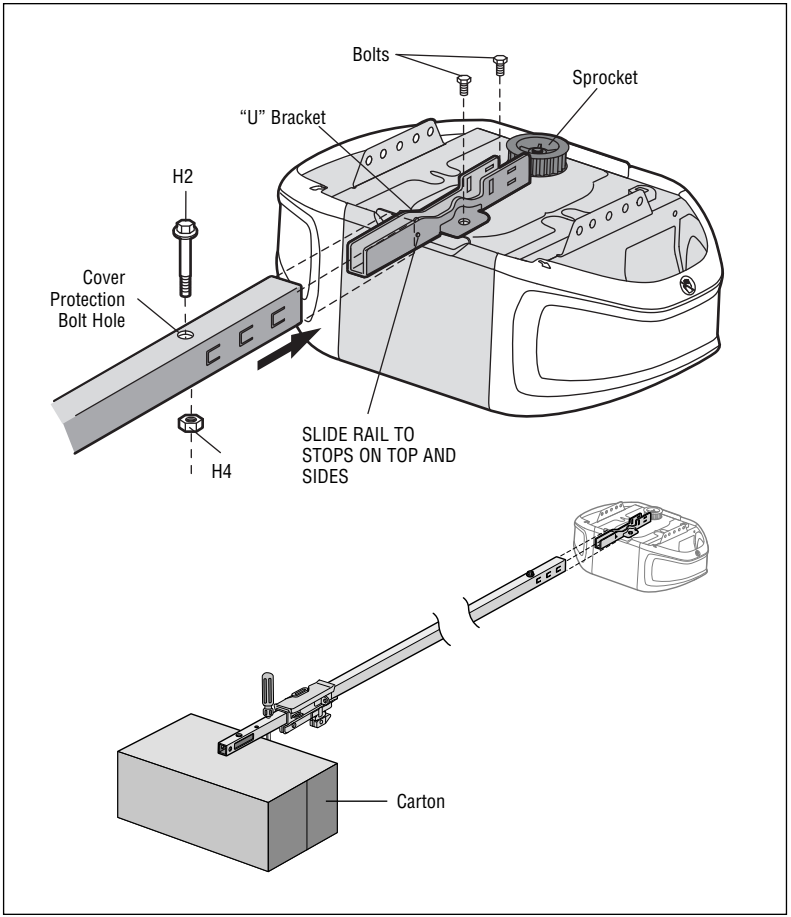

HARDWARE

H2
Bolt 1/4"-20x1-3/4"

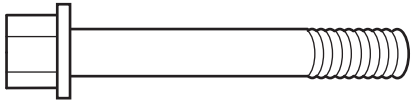

Mounted in the
garage door opener

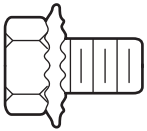

H4
Lock Nut 1/4"-20

3 Install the pulley

HARDWARE

H3
Bolt

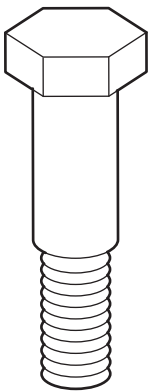

H2
Bolt 1/4"-20x1-3/4"

H4
Lock Nut 1/4"-20

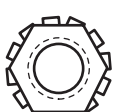

H6
Nut 3/8"

H7
Lock Washer 3/8"

3.1 Lay the belt beside the rail, as shown. Grasp the end with the hooked trolley connector and pass approximately 12" (30 cm) of belt through the window. Keep the ribbed side toward the rail, and allow it to hang.

3.2 Remove the tape from the pulley. The center should be greased, if not, re-grease the center of the pulley.

3.3 Insert the pulley into the window of the front rail.

3.4 Insert the bolt (H3) into the rail and pulley. Tighten securely with the lock washer (H7) and nut (H6).

3.5 Rotate the pulley to be sure it spins freely.

3.6 Insert the bolt (H2) into the hole shown and fasten with the lock nut (H4).

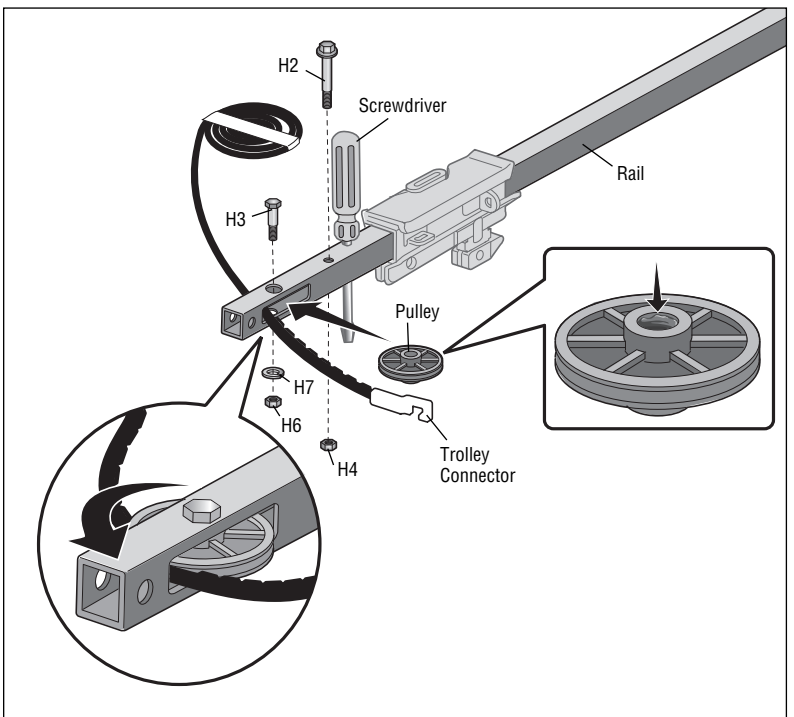

4 Install the belt

4.1 Pull the belt around the pulley and toward the trolley. The ribbed side must contact the pulley.

4.2 Hook the trolley connector into the retaining slot on the trolley as shown.

4.3 With the trolley against the screwdriver, dispense the remainder of the belt along the rail length toward the motor unit and around the sprocket. The sprocket teeth must engage the belt.

4.4 Check to make sure the belt is not twisted. Connect the trolley threaded shaft with the master link (H5).

- Push pins of master link bar through holes in end of belt and trolley threaded shaft.
- Push master link cap over pins and past pin notches.
- Slide clip-on spring over cap and onto pin notches until both pins are securely locked in place.

4.5 Insert the trolley threaded shaft through the hole in the trolley.

HARDWARE

H1
Threaded Shaft

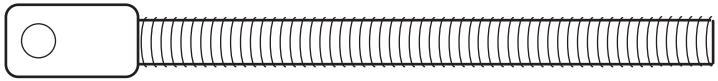

H5
Master Link

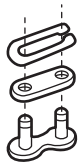

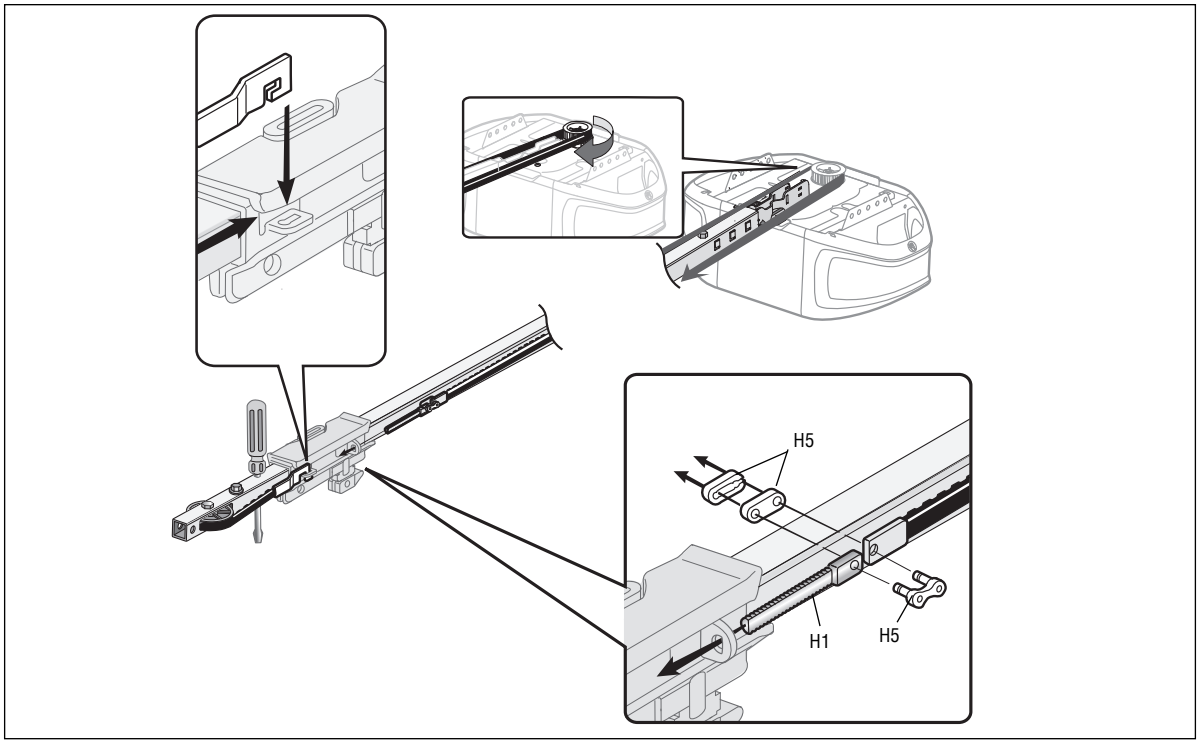

5 Tighten the belt and install the sprocket cover

⚠ WARNING

To avoid possible SERIOUS INJURY to fingers from moving garage door opener:
- ALWAYS keep hand clear of sprocket while operating opener.
- Securely attach sprocket cover BEFORE operating.

HARDWARE

H8
Spring Trolley Nut

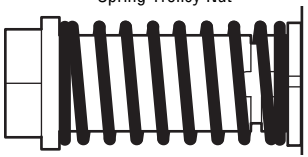

H9 (3)
Hex Screw #8x3/8"
(Packed with the sprocket cover)

5.1 By hand, thread the spring trolley nut on the threaded shaft (H8) until it is finger tight against the trolley. Do not use any tools.

Remove the screwdriver.

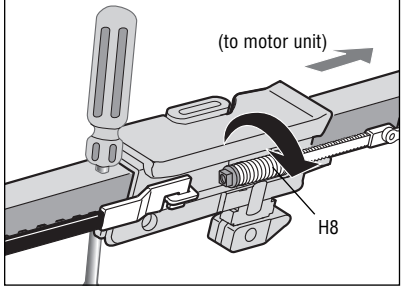

5.2 Insert a flathead screwdriver tip into one of the nut ring slots and brace it firmly against the trolley.

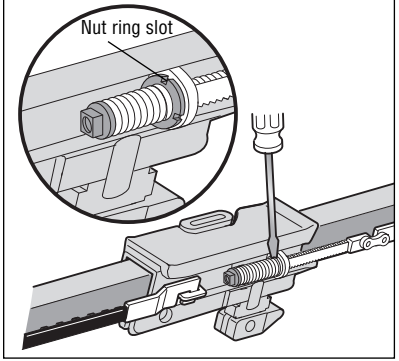

5.3 Tighten the spring trolley nut with an adjustable wrench or a 7/16" open end wrench about a quarter turn until the spring releases and snaps the nut ring against the trolley. This sets the spring to optimum belt tension.

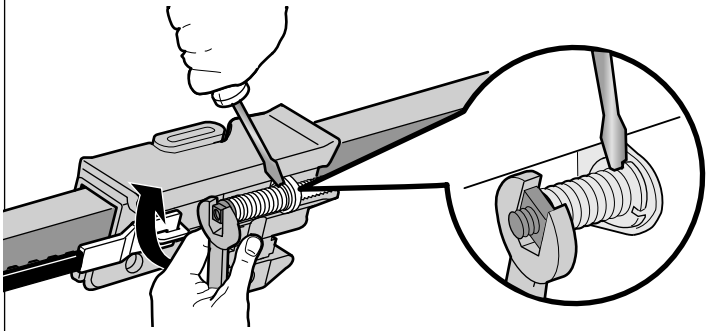

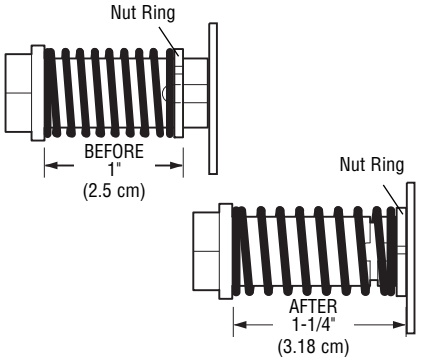

5.4 Position the sprocket cover over the garage door opener sprocket and attach with hex screws (H9).

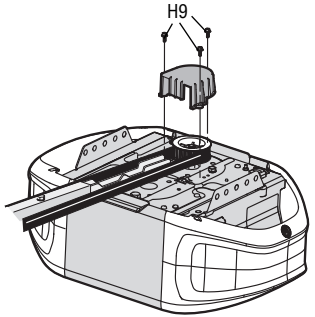

IMPORTANT INSTALLATION INSTRUCTIONS

⚠ WARNING

To reduce the risk of SEVERE INJURY or DEATH:

1. READ AND FOLLOW ALL INSTALLATION WARNINGS AND INSTRUCTIONS.
2. Install garage door opener ONLY on properly balanced and lubricated garage door. An improperly balanced door may NOT reverse when required and could result in SEVERE INJURY or DEATH.
3. ALL repairs to cables, spring assemblies and other hardware MUST be made by a trained door systems technician BEFORE installing opener.
4. Disable ALL locks and remove ALL ropes connected to garage door BEFORE installing opener to avoid entanglement.
5. Install garage door opener 7 feet (2.13 m) or more above floor.
6. Mount the emergency release within reach, but at least 6 feet (1.83 m) above the floor and avoiding contact with vehicles to avoid accidental release.
7. NEVER connect garage door opener to power source until instructed to do so.
8. NEVER wear watches, rings or loose clothing while installing or servicing opener. They could be caught in garage door or opener mechanisms.
9. Install wall-mounted garage door control:
   - within sight of the garage door.
   - out of reach of children at minimum height of 5 feet (1.5 m).
   - away from ALL moving parts of the door.
10. Place entrapment warning label on wall next to garage door control.
11. Place manual release/safety reverse test label in plain view on inside of garage door.
12. Upon completion of installation, test safety reversal system. Door MUST reverse on contact with a 1-1/2" (3.8 cm) high object (or a 2x4 laid flat) on the floor.
13. To avoid SERIOUS PERSONAL INJURY or DEATH from electrocution, disconnect ALL electric and battery power BEFORE performing ANY service or maintenance.
14. DO NOT enable the Timer-to-Close functionality if operating either one-piece or swinging garage doors. To be enabled ONLY when operating a sectional door.

Installation

1 Determine the header bracket location

⚠ WARNING

To prevent possible SERIOUS INJURY or DEATH:

- Header bracket MUST be rigidly fastened to structural support on header wall or ceiling, otherwise garage door might NOT reverse when required. DO NOT install header bracket over drywall.
- Concrete anchors MUST be used if mounting header bracket or 2x4 into masonry.
- NEVER try to loosen, move or adjust garage door, springs, cables, pulleys, brackets, or their hardware, ALL of which are under EXTREME tension.
- ALWAYS call a trained door systems technician if garage door binds, sticks, or is out of balance. An unbalanced garage door might NOT reverse when required.

Installation procedures vary according to garage door types. Follow the instructions which apply to your door.

1.1 Close the door and mark the inside vertical centerline of the garage door.

1.2 Extend the line onto the header wall above the door.
You can fasten the header bracket within 4 feet (1.22 m) of the left or right of the door center only if a torsion spring or center bearing plate is in the way; or you can attach it to the ceiling when clearance is minimal. (It may be mounted on the wall upside down if necessary, to gain approximately 1/2" (1 cm).)

If you need to install the header bracket on a 2x4 (on wall or ceiling), use lag screws (not provided) to securely fasten the 2x4 to structural supports.

1.3 Open your door to the highest point of travel as shown. Draw an intersecting horizontal line on the header wall above the high point:

- 2" (5 cm) above the high point for sectional door and one-piece door with track.
- 8" (20 cm) above the high point for one-piece door without track. This height will provide travel clearance for the top edge of the door. ***NOTE:*** *If the total number of inches exceeds the height available in your garage, use the maximum height possible, or refer to page 13 for ceiling installation.*

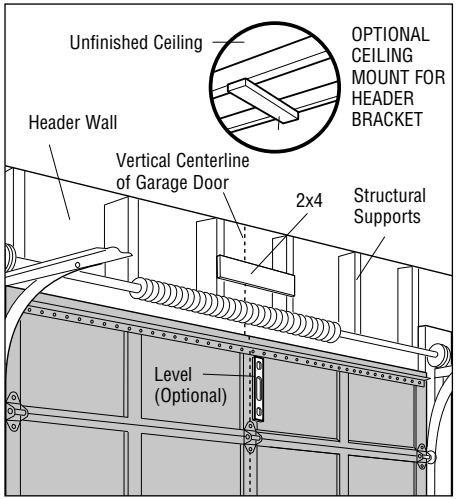

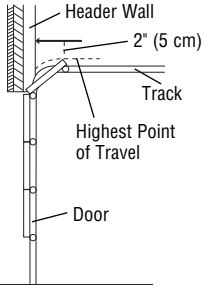

Sectional door with curved track

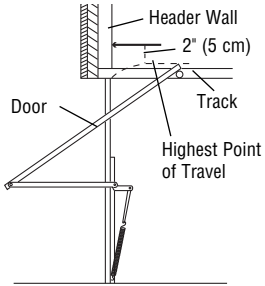

One-piece door with horizontal track

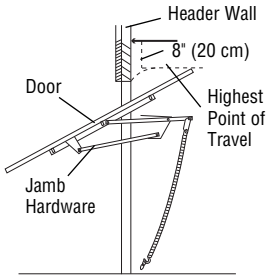

One-piece door without track: jamb hardware

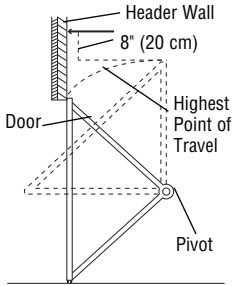

One-piece door without track: pivot hardware

2 Install the header bracket

You can attach the header bracket either to the wall above the garage door, or to the ceiling. Follow the instructions which will work best for your particular requirements. **Do not install the header bracket over drywall. If installing into masonry, use concrete anchors (not provided).**

HARDWARE

H11 (2)
Lag Screw
5/16"-9x1-5/8"

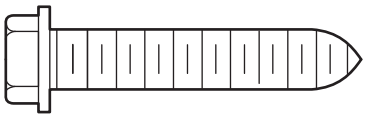

Option A WALL INSTALLATION

2.1A Center the bracket on the vertical centerline with the bottom edge of the bracket on the horizontal line as shown (with the arrow pointing toward the ceiling).

2.2A Mark the vertical set of bracket holes. Drill 3/16" pilot holes and fasten the bracket securely to a structural support with the hardware provided (H11).

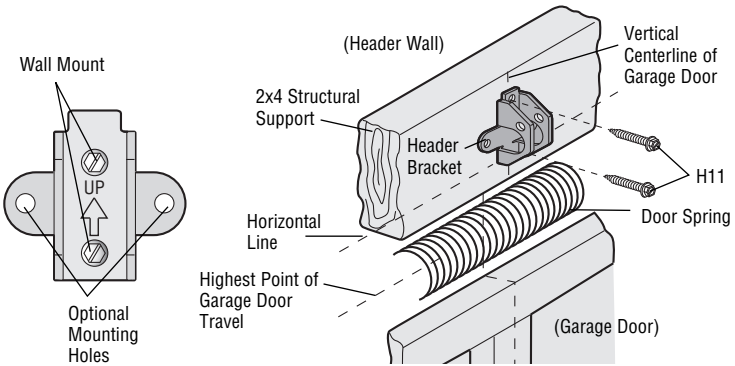

Option B CEILING INSTALLATION

2.1B Extend the vertical centerline onto the ceiling as shown.

2.2B Center the bracket on the vertical mark, no more than 6" (15 cm) from the wall. Make sure the arrow is pointing away from the wall. The bracket can be mounted flush against the ceiling when clearance is minimal.

2.3B Mark the side holes. Drill 3/16" pilot holes and fasten bracket securely to a structural support with the hardware provided (H11).

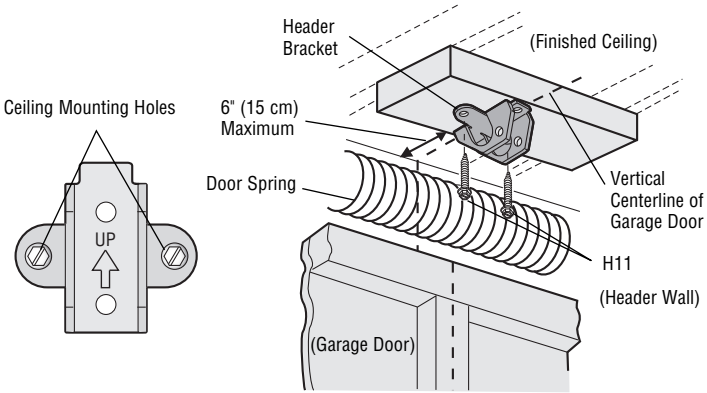

3 Attach the rail to the header bracket

3.1 Align the rail with the header bracket. Insert the clevis pin (H12) through the holes in the header bracket and rail. Secure with the ring fastener (H19).

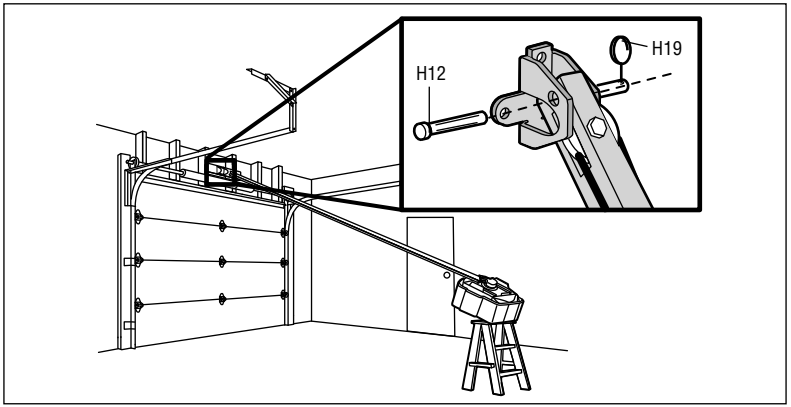

Tip: *Use the packing material as a protective base for the garage door opener.*

HARDWARE

H12
Clevis Pin 5/16"x1-1/2"

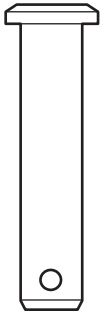

H19
Ring Fastener

4 Position the garage door opener

CAUTION

To prevent damage to garage door, rest garage door opener rail on 2x4 placed on top section of door.

Tip: *A 2x4 is ideal for setting the distance between the rail and the door.*

If the ladder is not tall enough you will need help at this point.

4.1 Remove the packing material and lift the garage door opener onto a ladder.

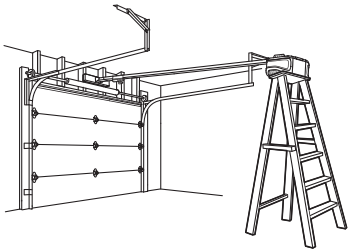

4.2 Fully open the door and place a 2x4 (laid flat) under the rail. For one-piece doors without tracks, lay the 2x4 on its side.

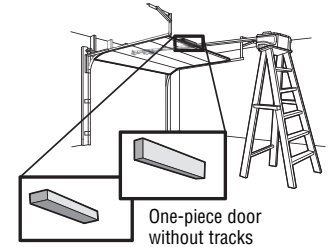

Tip: *If the door hits the trolley when it is raised, pull the trolley release arm down to disconnect the inner and outer trolley. Slide the outer trolley toward the garage door opener. The trolley can remain disconnected until further instruction.*

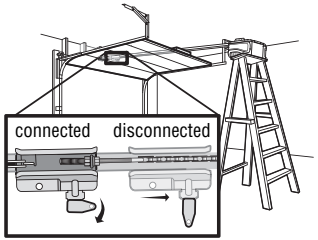

5 Hang the garage door opener

⚠ WARNING

To avoid possible SERIOUS INJURY from a falling garage door opener, fasten it SECURELY to structural supports of the garage. Concrete anchors MUST be used if installing ANY brackets into masonry.

Hanging the garage door opener will vary depending on your garage. Below are three example installations. Your installation may be different. For ALL installations the garage door opener MUST be connected to structural supports. The instructions illustrate one of the examples below.

Finished Ceiling

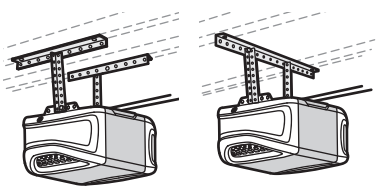

Unfinished Ceiling

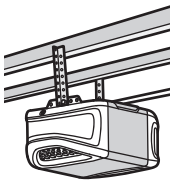

HARDWARE

H10 (2)
Lag Screw
5/16"-18x1-7/8"

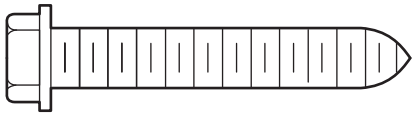

H20 (2)
Nut 5/16"-18

H21 (2)
Lock Washer
5/16"-18

H15 (2)
Hex Bolt
5/16"-18x7/8"

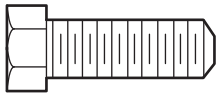

5.1 On finished ceilings, use the lag screws (H10) to attach a support bracket (not provided) to the structural supports before installing the garage door opener.

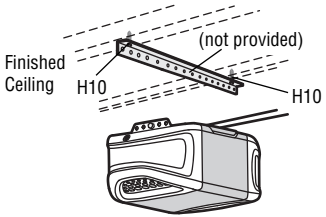

5.2 Make sure the garage door opener is aligned with the header bracket. Measure the distance from each side of the garage door opener to the support bracket.

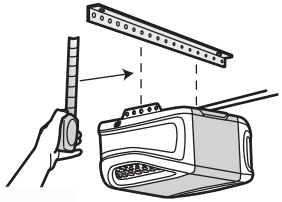

5.3 Cut both pieces of the hanging bracket to required lengths.

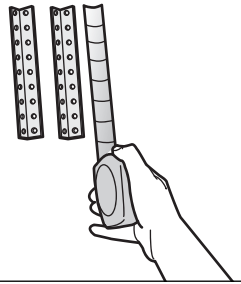

5.4 Attach the end of each hanging bracket to the support bracket with appropriate hardware (not provided).

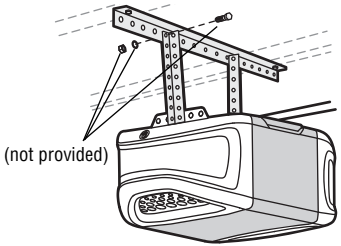

5.5 Attach the garage door opener to the hanging brackets with the bolts (H15), lock washers (H21) and nuts (H20).

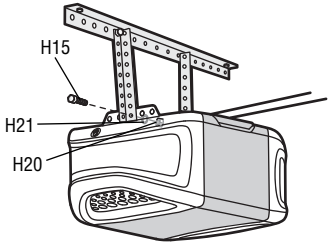

5.6 Remove the 2x4 and manually close the door. If the door hits the rail, raise the header bracket.

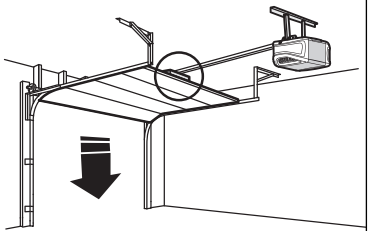

6 Install the light bulbs

CAUTION

To prevent possible OVERHEATING of the end panel or light socket:

- Use ONLY A19 incandescent or compact fluorescent light bulbs.
- DO NOT use incandescent bulbs larger than 100W.
- DO NOT use compact fluorescent light bulbs larger than 26W (100W) equivalent.
- DO NOT use halogen bulbs.
- DO NOT use short neck or specialty light bulbs.

NOTE: *The use of short neck or speciality light bulbs may overheat the end panel or light socket.*

6.1 Pull the top sides of the light lens and rotate the light lens down.

6.2 Insert an A19 incandescent or compact fluorescent light bulb (100 watt maximum), into the light socket.

6.3 Rotate the lens up to close.

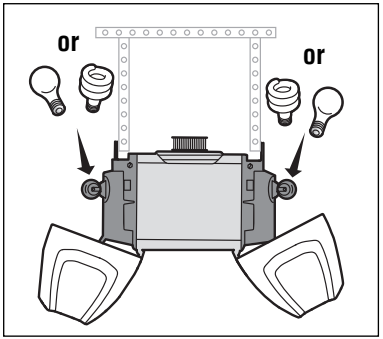

7 Attach the emergency release rope and handle

⚠ WARNING

To prevent possible SERIOUS INJURY or DEATH from a falling garage door:

- If possible, use emergency release handle to disengage trolley ONLY when garage door is CLOSED. Weak or broken springs or unbalanced door could result in an open door falling rapidly and/or unexpectedly.
- NEVER use emergency release handle unless garage doorway is clear of persons and obstructions.
- NEVER use handle to pull door open or closed. If rope knot becomes untied, you could fall.

Tip: *If it is necessary to cut the emergency release rope, seal the cut end with a match or lighter to prevent unraveling. Ensure that the emergency release rope and handle are above the top of all vehicles to avoid entanglement.*

7.1 Insert one end of the emergency release rope through the handle. Make sure that “NOTICE” is right side up. Tie a knot at least 1 inch (2.5 cm) from the end of the emergency release rope.

7.2 Insert the other end of the emergency release rope through the hole in the trolley release arm. Make sure the handle is 6 feet (1.83 m) above the floor and secure with a knot.

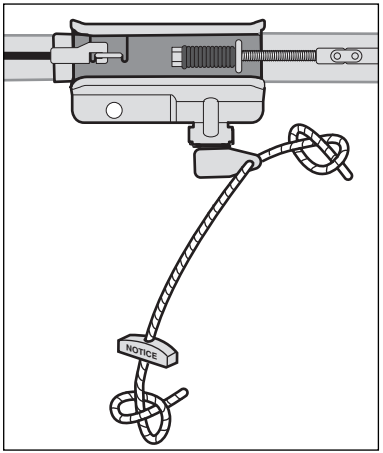

8 Install the door bracket

CAUTION

Fiberglass, aluminum or lightweight steel garage doors **WILL REQUIRE** reinforcement BEFORE installation of door bracket. Contact your door manufacturer for reinforcement kit.

Figure 1 shows one piece of angle iron as the horizontal brace. For the vertical brace, 2 pieces of angle iron are used to create a U-shaped support. The best solution is to check with your garage door manufacturer for an opener installation door reinforcement kit.

NOTE: *Many door reinforcement kits provide for direct attachment of the clevis pin and door arm. In this case you will not need the door bracket; proceed to the next step.*

HARDWARE

H16 (2)
Self-Threading Screw
1/4"-14x5/8"

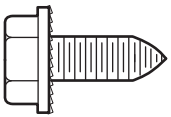

Option A SECTIONAL DOORS

8.1A Center the door bracket on the previously marked vertical centerline used for the header bracket installation. Note correct UP placement, as stamped inside the bracket.

8.2A Position the top edge of the bracket 2"-4" (5-10 cm) below the top edge of the door, OR directly below any structural support across the top of the door.

8.3A Mark, drill holes and install as follows, depending on your door's construction:

Metal or light weight doors using a vertical angle iron brace between the door panel support and the door bracket:

- Drill 3/16" fastening holes. Secure the door bracket using the two self-threading screws (H16). (Figure 2)
- Alternately, use two 5/16" bolts, lock washers and nuts (not provided). (Figure 3)

Metal, insulated or light weight factory reinforced doors:

- Drill 3/16" fastening holes. Secure the door bracket using the self-threading screws (H16). (Figure 4)

Wood Doors:

- Use top and bottom or side to side door bracket holes. Drill 5/16" holes through the door and secure bracket with 5/16"x2" carriage bolts, lock washers and nuts (not provided). (Figure 5)

NOTE: *The 1/4"-14x5/8" self-threading screws are not intended for use on wood doors.*

A horizontal and vertical reinforcement is needed for lightweight garage doors (fiberglass, aluminum, steel, doors with glass panel, etc.) (not provided).

A horizontal reinforcement brace should be long enough to be secured to two or three vertical supports. A vertical reinforcement brace should cover the height of the top panel.

FIGURE 1

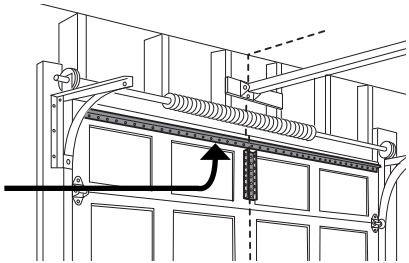

FIGURE 2

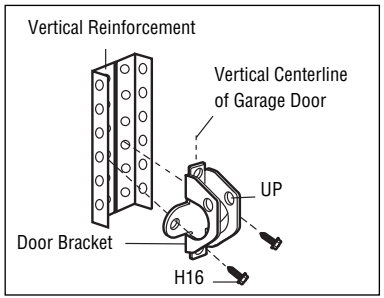

FIGURE 3

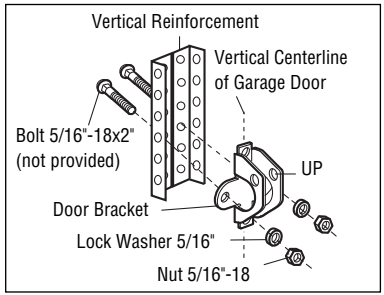

FIGURE 4

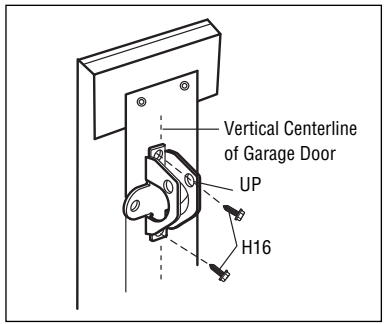

FIGURE 5

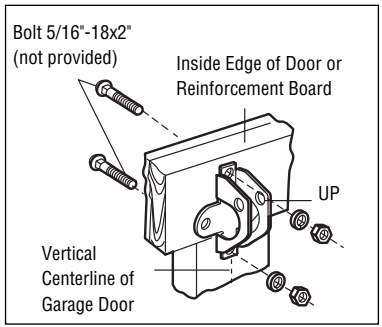

8 Install the door bracket

Option B ONE-PIECE DOORS

8.1B Center the door bracket on the top of the door, in line with the header bracket as shown.

8.2B Mark either the left and right, or the top and bottom holes.

Metal Doors:

- Drill 3/16" pilot holes and fasten the bracket with the self-threading screws (H16) provided.

Wood Doors:

- Drill 5/16" holes and use 5/16"x2" carriage bolts, lock washers and nuts (not provided) or 5/16"x1-1/2" lag screws (not provided) depending on your installation needs.

NOTE: *The door bracket may be installed on the top edge of the door if required for your installation. (Refer to the dotted line optional placement drawing.)*

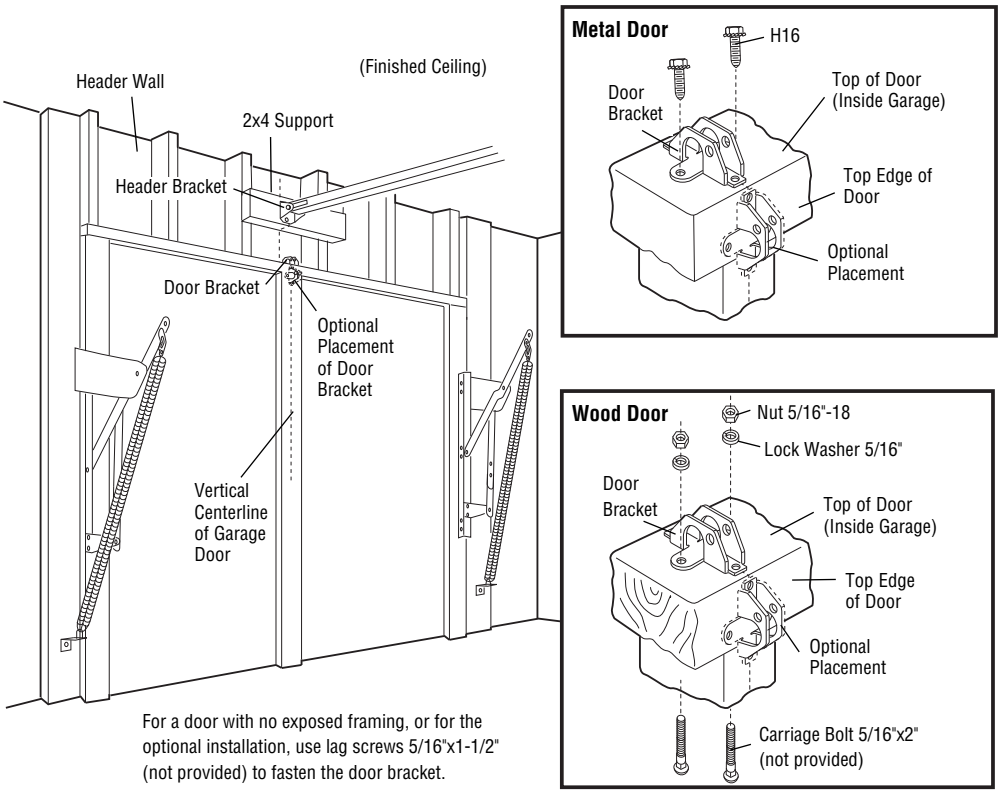

For a door with no exposed framing, or for the optional installation, use lag screws 5/16"x1-1/2" (not provided) to fasten the door bracket.

9 Connect the door arm to the trolley

IMPORTANT: The groove on the straight door arm MUST face away from the curved door arm.

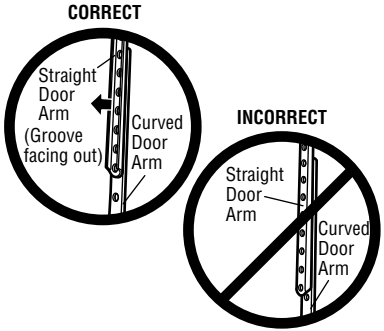

HARDWARE

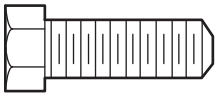

H15 (2)
Hex Bolt
5/16"-18x7/8"

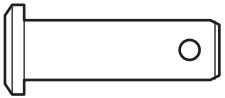

H14
Clevis Pin
5/16"x1"

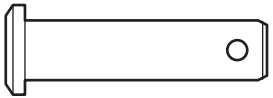

H13
Clevis Pin
5/16"x1-1/4"

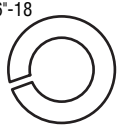

H21 (2)
Lock Washer
5/16"-18

H19 (2)
Ring
Fastener

H20 (2)
Nut
5/16"-18

Option A ONE-PIECE DOORS

9.1A Close the door. Disconnect the trolley by pulling the emergency release handle.

9.2A Fasten the straight door arm and the curved door arm together to the longest possible length (with a 2 or 3 hole overlap) using the bolts (H15), nuts (H20) and lock washers (H21).

9.3A Attach the straight door arm to the door bracket using the clevis pin (H13). Secure with the ring fastener (H19).

9.4A Attach the curved door arm to the trolley using the clevis pin (H14). Secure with the ring fastener (H19).

9.5A Pull the emergency release handle toward the garage door opener until the trolley release arm is horizontal.

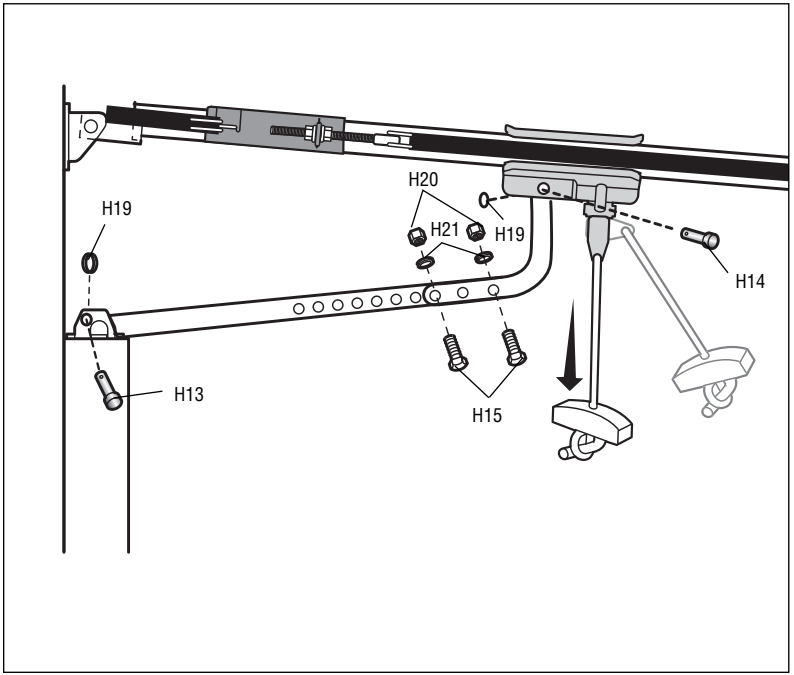

9 Connect the door arm to the trolley

Option B SECTIONAL DOORS

9.1B Close the door. Disconnect the trolley by pulling the emergency release handle.

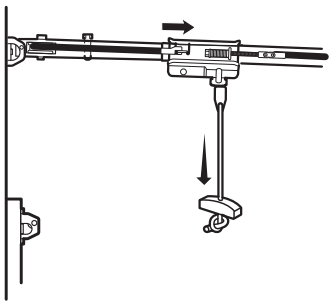

9.2B Attach the straight door arm to the outer trolley using the clevis pin (H14). Attach with the ring fastener (H19).

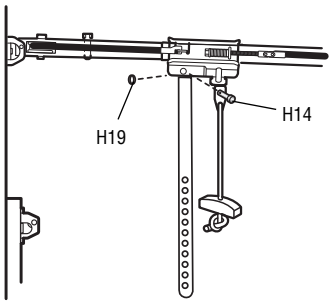

9.3B Attach the curved door arm to the door bracket using the clevis pin (H13). Attach with the ring fastener (H19).

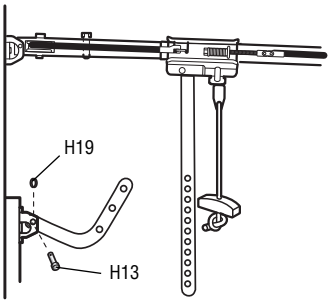

9.4B Bring arm sections together. Find two pairs of holes that line up and join sections. Select holes as far apart as possible to increase door arm rigidity and attach using the bolts (H15), nuts (H20) and lock washers (H21).

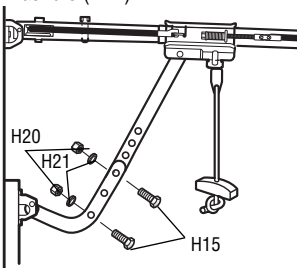

Tip: *If the holes in the curved door arm and the straight door arm do not align, reverse the straight door arm, select two holes (as far apart as possible) and attach using bolts (H15), nuts (H20), and lock washers (H21).*

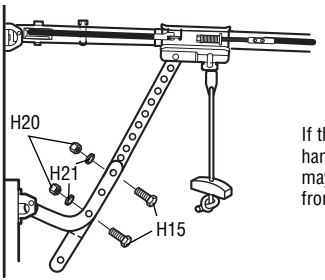

If the straight door arm is hanging down too far, you may cut 6 inches (15 cm) from the solid end.

9.5B Pull the emergency release handle toward the garage door opener until the trolley release arm is horizontal. The trolley will re-engage automatically when the garage door opener is activated.

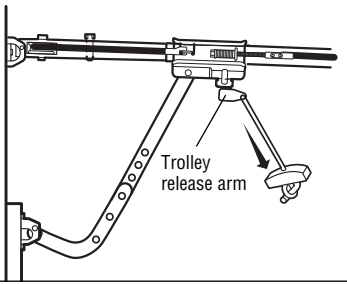

Install the Door Control

1 Install the door control

⚠ WARNING

To prevent possible SERIOUS INJURY or DEATH from electrocution:

- Be sure power is NOT connected BEFORE installing door control.
- Connect ONLY to 24 VOLT low voltage wires.

To prevent possible SERIOUS INJURY or DEATH from a closing garage door:

- Install door control within sight of garage door, out of reach of children at a minimum height of 5 feet (1.5 m), and away from ALL moving parts of door.
- NEVER permit children to operate or play with door control push buttons or remote control transmitters.
- Activate door ONLY when it can be seen clearly, is properly adjusted, and there are no obstructions to door travel.
- ALWAYS keep garage door in sight until completely closed. NEVER permit anyone to cross path of closing garage door.

INTRODUCTION

Compatible with MyQ™ and Security✚ 2.0™ accessories. ***NOTE:*** *Older Chamberlain accessories and third party products are not compatible.*

Your garage door opener is compatible with up to 2 Security✚ 2.0™ door controls.

Install the door control within sight of the door at a minimum height of 5 feet (1.5 m) where small children cannot reach, and away from the moving parts of the door.

NOTE: *Your product may look different than the illustrations.*

HARDWARE

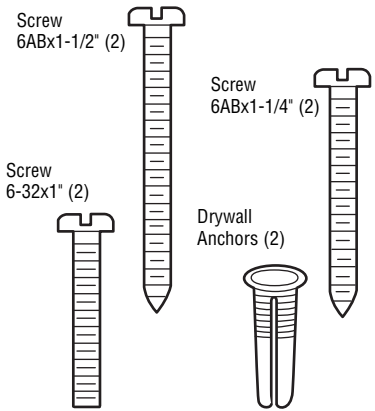

NOTE: *For gang box installations it is not necessary to drill holes or install the drywall anchors. Use the existing holes in the gang box.*

1.1 Strip 7/16 inch (11 mm) of insulation from one end of the wire and separate the wires.

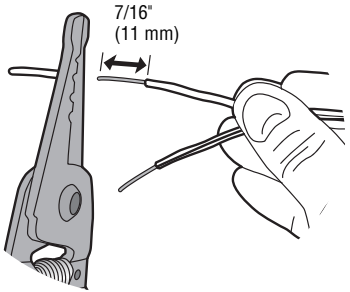

1.2 Connect one wire to each of the two screws on the back of the door control. The wires can be connected to either screw.

PRE-WIRED INSTALLATIONS: Choose any two wires to connect, but make note of which wires are used so that the correct wires are connected to the garage door opener in a later step.

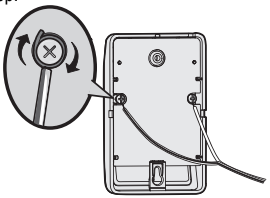

1.3 Mark the location of the bottom mounting hole and drill a 5/32 inch (4 mm) hole.

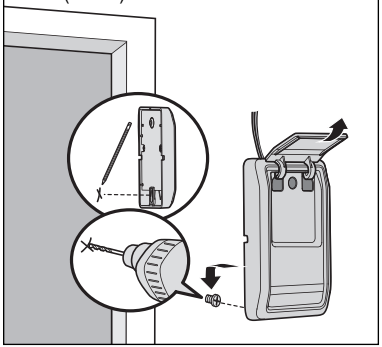

1.4 Install the bottom screw, allowing 1/8 inch (3 mm) to protrude from the wall.

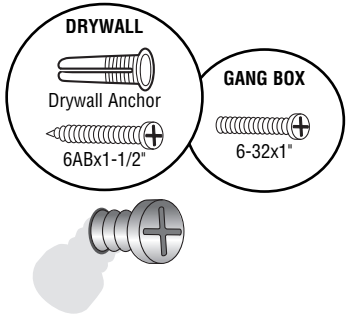

Install the Door Control

1.5 Position the bottom hole of the door control over the screw and slide down into place.

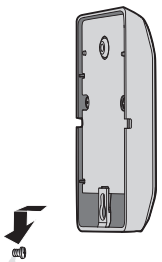

1.6 Lift the push bar and mark the top hole.

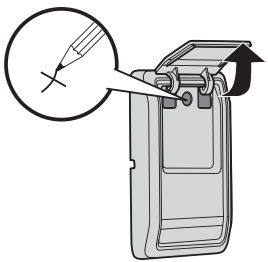

1.7 Remove the door control from the wall and drill a 5/32 inch (4 mm) hole for the top screw.

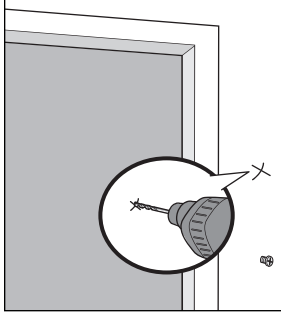

1.8 Position the bottom hole of the door control over the screw and slide down into place. Attach the top screw.

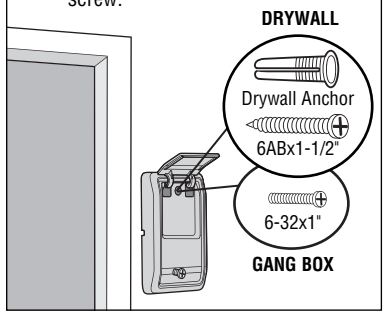

2 Wire the door control to the garage door opener

HARDWARE

Insulated Staple (30)

PRE-WIRED INSTALLATIONS: When wiring the door control to the garage door opener make sure you use the same wires that are connected to the door control.

2.1 Run the white and red/white wire from the door control to the garage door opener. Attach the wire to the wall and ceiling with the staples (not applicable for gang box or pre-wired installations).

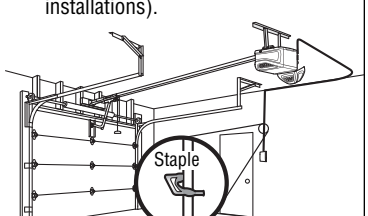

Do not pierce the wire with the staple as this may cause a short or an open circuit.

2.2 Strip 7/16 inch (11 mm) of insulation from the other end of the wire near the garage door opener.

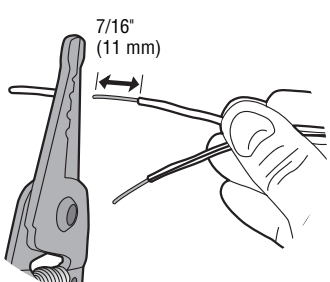

2.3 Connect the wire to the red and white terminals on the garage door opener.

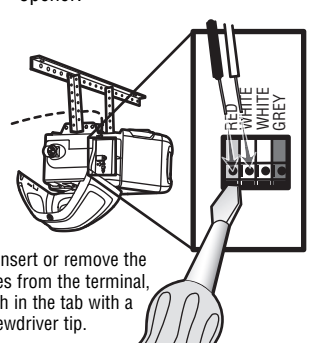

To insert or remove the wires from the terminal, push in the tab with a screwdriver tip.

3 Attach the warning labels

3.1 Attach the entrapment warning label on the wall near the door control with tacks or staples.

3.2 Attach the manual release/safety reverse test label in a visible location on the inside of the garage door.

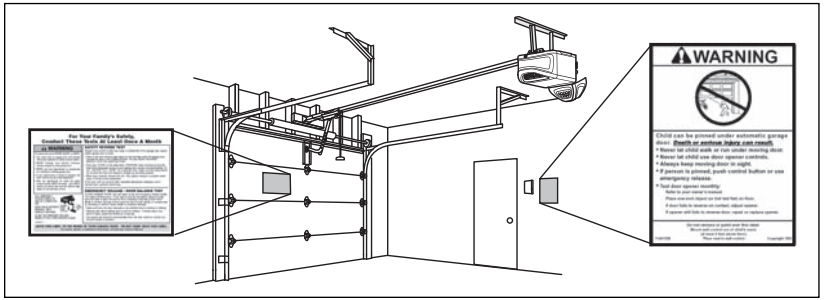

Install the Protector System®

Introduction

⚠ WARNING

Be sure power is NOT connected to the garage door opener BEFORE installing the safety reversing sensor.

To prevent SERIOUS INJURY or DEATH from a closing garage door:

- Correctly connect and align the safety reversing sensor. This required safety device MUST NOT be disabled.
- Install the safety reversing sensor so beam is NO HIGHER than 6" (15 cm) above garage floor.

IMPORTANT INFORMATION ABOUT THE SAFETY REVERSING SENSOR

The safety reversing sensors must be connected and aligned correctly before the garage door opener will move in the down direction.

The sending sensor (with an amber LED) transmits an invisible light beam to the receiving sensor (with a green LED). If an obstruction breaks the light beam while the door is closing, the door will stop and reverse to the full open position, and the garage door opener lights will flash 10 times.

NOTE: *For energy efficiency the garage door opener will enter sleep mode when the door is fully closed. The sleep mode shuts the garage door opener down until activated. The sleep mode is sequenced with the garage door opener light bulb; as the light bulb turns off the sensor LEDs will turn off and whenever the garage door opener lights turn on the sensor LEDs will light. The garage door opener will not go into the sleep mode until the garage door opener has completed 5 cycles upon power up.*

When installing the safety reversing sensors check the following:

- Sensors are installed inside the garage, one on either side of the door.
- Sensors are facing each other with the lenses aligned and the receiving sensor lens does not receive direct sunlight.
- Sensors are no more than 6 inches (15 cm) above the floor and the light beam is unobstructed.

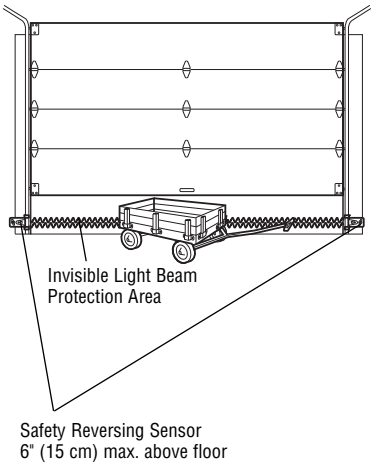

Install the Protector System®

1 Install the Safety Reversing Sensors

The safety reversing sensors can be attached to the door track, the wall, or the floor. The sensors should be no more than 6 inches (15 cm) above the floor. If the door track will not support the sensor bracket a wall installation is recommended. Choose one of the following installations.

HARDWARE

H17 (2)
Carriage Bolt
1/4"-20x1/2"

H18 (2)
Wing Nut
1/4"-20

Option A DOOR TRACK INSTALLATION

1.1A Slide the curved arms of the sensor bracket around the edge of the door track. Snap into place so that the sensor bracket is flush against the track.

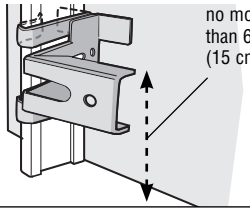

1.2A Slide the carriage bolt (H17) into the slot on each sensor.

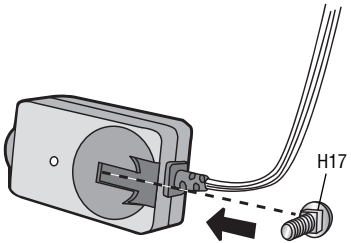

1.3A Insert the bolt through the hole in the sensor bracket and attach with the wing nut (H18). The lenses on both sensors should point toward each other. Make sure the lens is not obstructed by the sensor bracket.

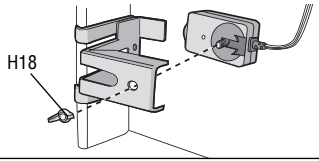

Option B WALL INSTALLATION

If additional clearance is needed an extension bracket (not provided) or wood blocks can be used. Make sure that each bracket will have the same amount of clearance so they will align correctly.

1.1B Position the sensor bracket against the wall with the curved arms facing the door. Make sure there is enough clearance for the beam to be unobstructed. Mark holes.

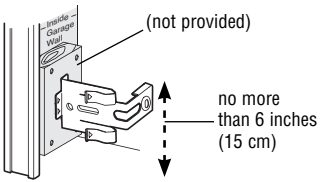

1.2B Drill 3/16 inch pilot holes for each sensor bracket and attach the sensor brackets to the wall using lag screws (not provided).

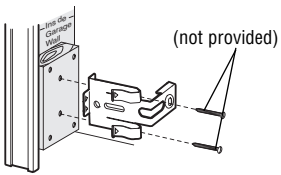

1.3B Slide the carriage bolt (H17) into the slot on each sensor.

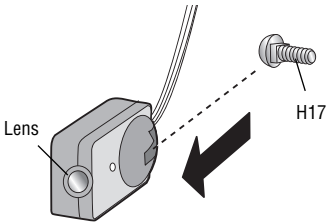

1.4B Insert the bolt through the hole in the sensor bracket and attach with the wing nut (H18). The lenses on both sensors should point toward each other. Make sure the lens is not obstructed by the sensor bracket.

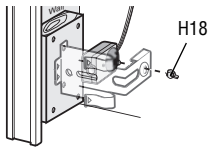

1 Install the Safety Reversing Sensors

Option C FLOOR INSTALLATION

Use an extension bracket (not provided) or wood block to raise the sensor bracket if needed.

1.1C Carefully measure the position of both sensor brackets so they will be the same distance from the wall and unobstructed.

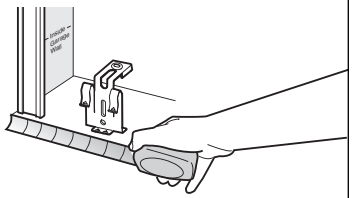

1.2C Attach the sensor brackets to the floor using concrete anchors (not provided).

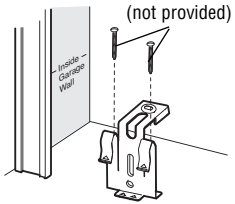

1.3C Slide the carriage bolt (H17) into the slot on each sensor.

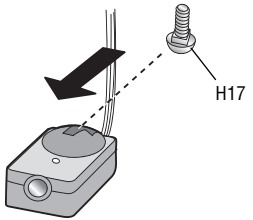

1.4C Insert the bolt through the hole in the sensor bracket and attach with the wing nut (H18). The lenses on both sensors should point toward each other. Make sure the lens is not obstructed by the sensor bracket.

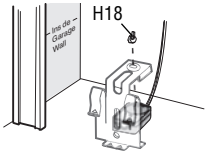

2 Wire the Safety Reversing Sensors

PRE-WIRED INSTALLATIONS: If your garage already has wires installed for the safety reversing sensors, refer to the instructions on the following page.

HARDWARE

Insulated Staple (30)

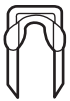

Option A INSTALLATION WITHOUT PRE-WIRING

2.1A Run the wire from both sensors to the garage door opener. Attach the wire to the wall and ceiling with the staples.

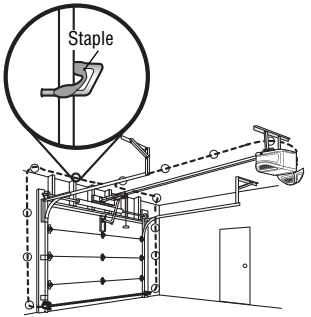

2.2A Strip 7/16 inch (11 mm) of insulation from each set of wires. Separate the wires. Twist the white wires together. Twist the white/black wires together.

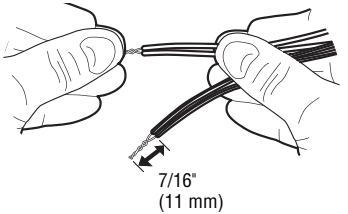

2.3A Insert the white wires into the white terminal on the garage door opener. Insert the white/black wires into the grey terminal on the garage door opener.

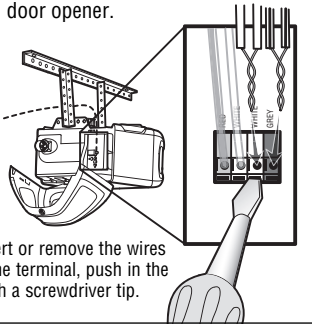

To insert or remove the wires from the terminal, push in the tab with a screwdriver tip.

Install the Protector System®

Option B PRE-WIRED INSTALLATION

2.1B Cut the end of the safety reversing sensor wire, making sure there is enough wire to reach the pre-installed wires from the wall.

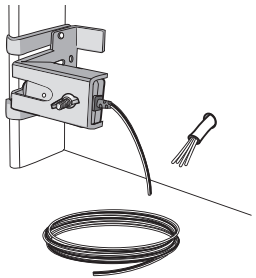

2.2B Separate the safety reversing sensor wires and strip 7/16 inch (11 mm) of insulation from each end. Choose two of the pre-installed wires and strip 7/16 inch (11 mm) of insulation from each end. Make sure that you choose the same color pre-installed wires for each sensor.

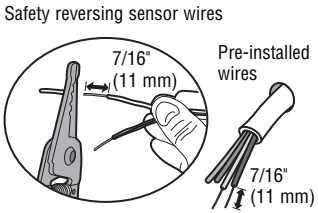

2.3B Connect the pre-installed wires to the sensor wires with wire nuts making sure the colors correspond for each sensor. For example, the white wire would connect to the yellow wire and the white/black wire would connect to the purple wire.

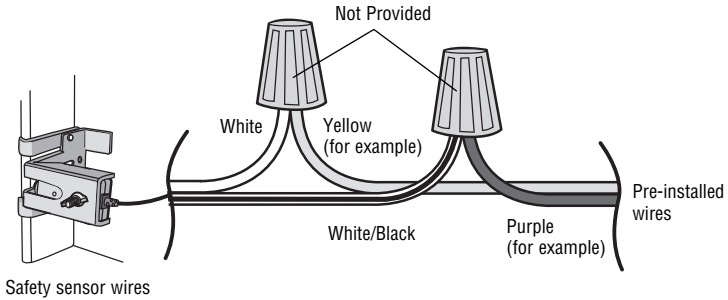

2.4B At the garage door opener, strip 7/16 inch (11 mm) of insulation from each end of the wires previously chosen for the safety reversing sensors. Twist the like-colored wires together.

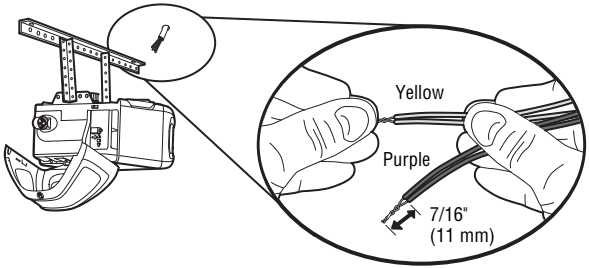

2.5B Insert the wires connected to the white safety sensor wires to the white terminal on the garage door opener. Insert the wires that are connected to the white/black safety sensor wires to the grey terminal on the garage door opener.

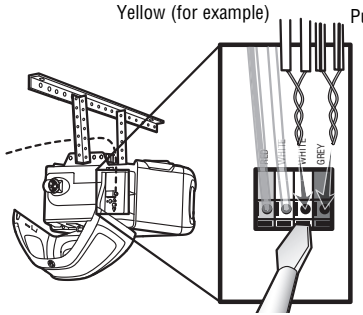

To insert or remove the wires from the terminal, push in the tab with a screwdriver tip.

1 Connect power

⚠ WARNING

To prevent possible SERIOUS INJURY or DEATH from electrocution or fire:

- Be sure power is NOT connected to the opener, and disconnect power to circuit BEFORE removing cover to establish permanent wiring connection.
- Garage door installation and wiring MUST be in compliance with ALL local electrical and building codes.
- NEVER use an extension cord, 2-wire adapter, or change plug in any way to make it fit outlet. Be sure the opener is grounded.

To avoid installation difficulties, do not activate the garage door opener at this time. To reduce the risk of electric shock, your garage door opener has a grounding type plug with a third grounding pin. This plug will only fit into a grounding type outlet. If the plug doesn't fit into your outlet, contact a qualified electrician to install the proper outlet.

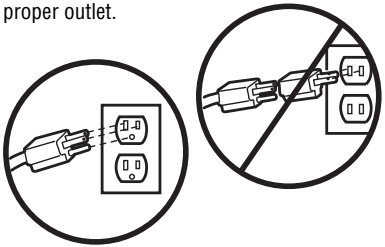

THERE ARE TWO OPTIONS FOR CONNECTING POWER:

Option A TYPICAL WIRING

1.1A Plug in the garage door opener into a grounded outlet.

1.2A DO NOT run garage door opener at this time.

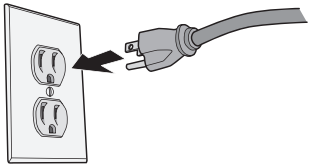

Option B PERMANENT WIRING

If permanent wiring is required by your local code, refer to the following procedure. To make a permanent connection through the 7/8" hole in the top of the motor unit (according to local code):

1.1B Be sure power is NOT connected to the opener, and disconnect power to circuit.

1.2B Remove the garage door opener cover and set aside.

1.3B Remove the attached green ground terminal.

1.4B Cut black and white wires and strip away 1/2" (1 cm) of insulation, 3" (7.5 cm) before spade terminals.

1.5B Remove the power cord from opener.

1.6B Install a conduit or flex cable adapter to the 7/8" hole.

1.7B Run wires through conduit, cut to proper length and strip insulation.

1.8B Attach with wire nuts provided. Attach the ground wire to the green ground screw. **The opener must be grounded.**

1.9B Properly secure wire under plastic ties so that wire does not come in contact with moving parts.

1.10B Reinstall the cover. DO NOT run garage door opener at this time.

PERMANENT WIRING CONNECTION

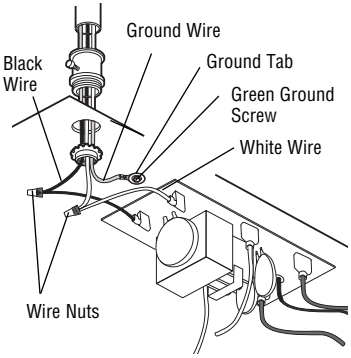

2 Ensure the Safety Reversing Sensors are aligned

The door will not close if the sensors have not been installed and aligned correctly.

When the light beam is obstructed or misaligned while the door is closing, the door will reverse and the garage door opener lights will flash ten times. If the door is already open, it will not close.

The sensors can be aligned by loosening the wing nuts, aligning the sensors, and tightening the wing nuts.

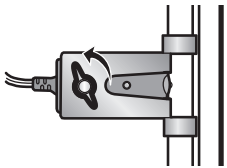

2.1 Check to make sure the LEDs in both sensors are glowing steadily. The LEDs in both sensors will glow steadily if they are aligned and wired correctly.

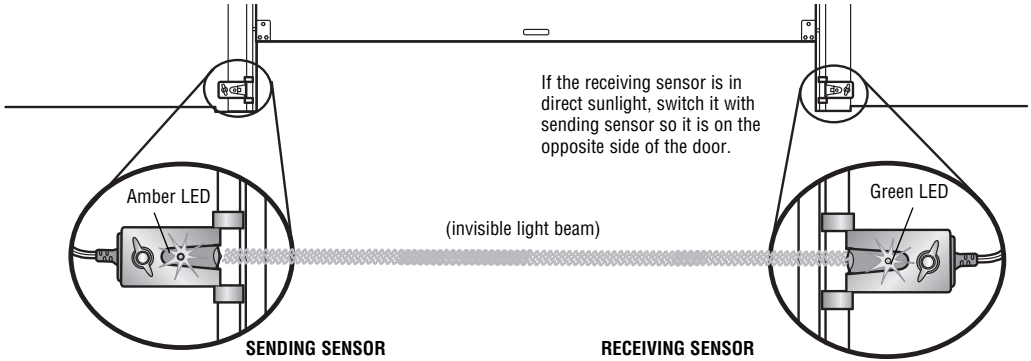

IF THE AMBER LED ON THE SENDING SENSOR IS NOT GLOWING:

Make sure there is power to the garage door opener.

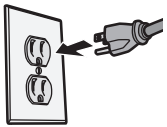

Make sure the sensor wire is not shorted/broken.

Make sure the sensor has been wired correctly: white wires to white terminal and white/black wires to grey terminal.

IF THE GREEN LED ON THE RECEIVING SENSOR IS NOT GLOWING:

Make sure the sensor wire is not shorted/broken.

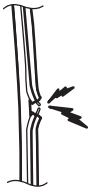

Make sure the sensors are aligned.

3 Ensure the Door Control is wired correctly

If the door control has been installed and wired correctly, a message will display on the Smart Control Panel screen or the command LED on the Motion-Detecting Control Panel will blink.

Adjustments

⚠ WARNING

Without a properly installed safety reversal system, persons (particularly small children) could be SERIOUSLY INJURED or KILLED by a closing garage door.

- Incorrect adjustment of garage door travel limits will interfere with proper operation of safety reversal system.
- After ANY adjustments are made, the safety reversal system MUST be tested. Door MUST reverse on contact with 1-1/2" (3.8 cm) high object (or 2x4 laid flat) on floor.

CAUTION

To prevent damage to vehicles, be sure fully open door provides adequate clearance.

To watch a short instructional video on programming your new garage door opener use your smartphone to read the QR Code below:

Tip: *If anything interferes with the door's upward travel it will stop. If anything interferes with the door's downward travel, it will reverse.*

INTRODUCTION

Your garage door opener is designed with electronic controls to make setup and adjustments easy. The adjustments allow you to program where the door will stop in the open (UP) and close (DOWN) position. The electronic controls sense the amount of force required to open and close the door. The force is adjusted automatically when you program the travel and cannot be changed.

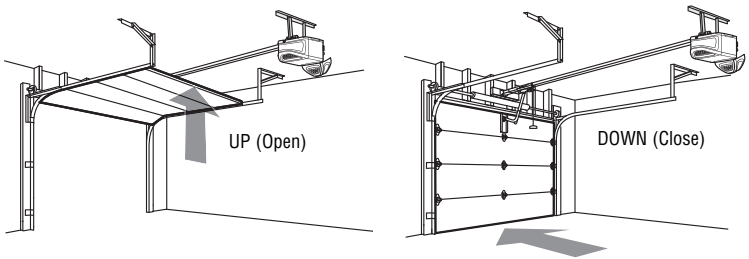

ONE-PIECE DOORS ONLY

When setting the UP travel for a one-piece door ensure that the door does not slant backwards when fully open (UP). If the door is slanted backwards this will cause unnecessary bucking and/or jerking when the door is opening or closing.

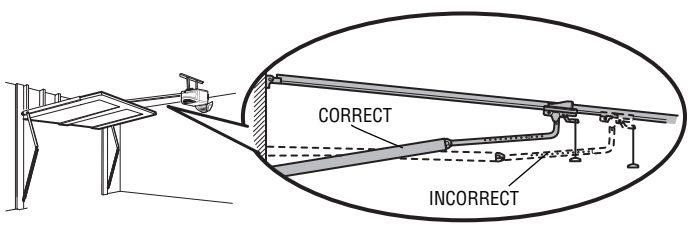

PROGRAMMING BUTTONS

The programming buttons are located on the left side panel of the garage door opener and are used to program the travel.

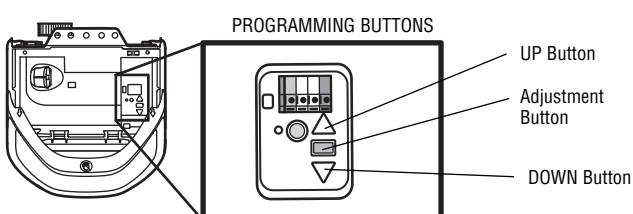

Adjustments

1 Program the Travel

⚠ WARNING

Without a properly installed safety reversal system, persons (particularly small children) could be SERIOUSLY INJURED or KILLED by a closing garage door.

- Incorrect adjustment of garage door travel limits will interfere with proper operation of safety reversal system.
- After ANY adjustments are made, the safety reversal system MUST be tested. Door MUST reverse on contact with 1-1/2" (3.8 cm) high object (or 2x4 laid flat) on floor.

1.1 Press and hold the Adjustment Button until the UP Button begins to flash and/or a beep is heard.

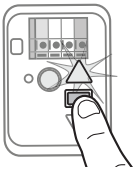

1.2 Press and hold the UP Button until the door is in the desired UP position

NOTE: *The UP and DOWN Buttons can be used to move the door up and down as needed.*

1.3 Once the door is in the desired UP position press and release the Adjustment Button. The garage door opener lights will flash twice and the DOWN Button will begin to flash.

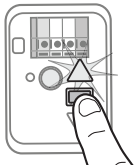

1.4 Press and hold the DOWN Button until the door is in the desired DOWN position.

NOTE: *The UP and DOWN Buttons can be used to move the door up and down as needed.*

1.5 Once the door is in the desired DOWN position press and release the Adjustment Button. The garage door opener lights will flash twice and the UP Button will begin to flash.

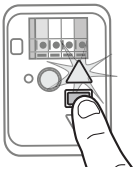

1.6 Press and release the UP Button. When the door travels to the programmed UP position, the DOWN Button will begin to flash.

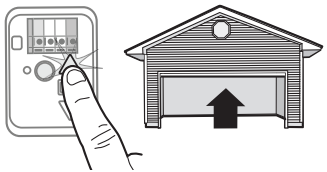

1.7 Press and release the DOWN Button. The door will travel to the programmed DOWN position. Programming is complete.

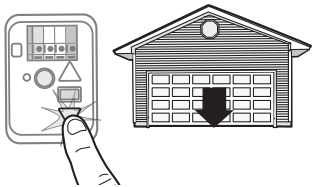

* If the garage door opener lights are flashing 5 times during the steps for Program the Travel, the programming has timed out. If the garage door opener lights are flashing 10 times during the steps for Program the Travel, the safety reversing sensors are misaligned or obstructed (refer to page 28). When the sensors are aligned and unobstructed, cycle the door through a complete up and down cycle using the remote control or the UP and DOWN buttons. Programming is complete. If you are unable to operate the door up and down, repeat the steps for Programming the Travel.

2 Test the Safety Reversal System

⚠ WARNING

Without a properly installed safety reversal system, persons (particularly small children) could be SERIOUSLY INJURED or KILLED by a closing garage door.

- Safety reversal system MUST be tested every month.
- After ANY adjustments are made, the safety reversal system MUST be tested. Door MUST reverse on contact with 1-1/2" high (3.8 cm) object (or 2x4 laid flat) on the floor.

2.1 With the door fully open, place a 1-1/2 inch (3.8 cm) board (or a 2x4 laid flat) on the floor, centered under the garage door.

2.2 Press the remote control push button to close the door. The door MUST reverse when it makes contact with the board.

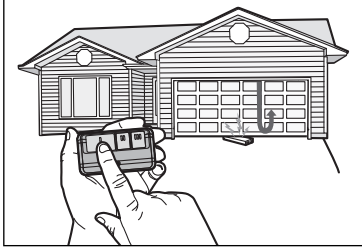

If the door stops and does not reverse on the obstruction, the travel needs to be adjusted (refer to Adjustment Step 1).

Repeat the test. When the door reverses upon contact with the 1-1/2 inch board, remove the board and open/close the door 3 or 4 times to test the adjustment.

If the test continues to fail, call a trained door systems technician.

3 Test the Protector System®

⚠ WARNING

Without a properly installed safety reversing sensor, persons (particularly small children) could be SERIOUSLY INJURED or KILLED by a closing garage door.

3.1 Open the door. Place the garage door opener carton in the path of the door.

3.2 Press the remote control push button to close the door. The door will not move more than an inch (2.5 cm), and the garage door opener lights will flash 10 times.

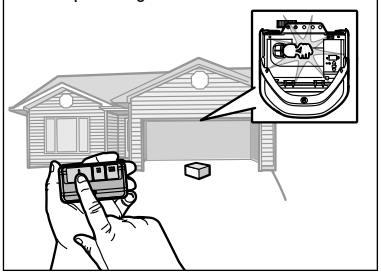

The garage door opener will not close from a remote control if the LED in either safety reversing sensor is off (alerting you to the fact that the sensor is misaligned or obstructed).

If the garage door opener closes the door when the safety reversing sensor is obstructed (and the sensors are no more than 6 inches [15 cm] above the floor), call for a trained door systems technician.

Battery Backup

⚠ WARNING

To reduce the risk of FIRE or INJURY to persons:

- Disconnect ALL electric and battery power BEFORE performing ANY service or maintenance.
- Use ONLY Chamberlain part # 41A6357-1 for replacement battery.
- DO NOT dispose of battery in fire. Battery may explode. Check with local codes for disposal instructions.

CAUTION

ALWAYS wear protective gloves and eye protection when changing the battery or working around the battery compartment.

1 Install the battery

1.1 Unplug the garage door opener.

1.2 Open the light lens on the right side panel of the garage door opener. Use a Phillips head screwdriver to remove the battery cover on the garage door opener.

1.3 Partially insert the battery into the battery compartment with the terminals facing out.

1.4 Connect red (+) and black (-) wires from the garage door opener to the corresponding terminals on the battery.

1.5 Verify the battery wires are seated in the channel and replace the battery cover.

1.6 Plug in the garage door opener.

1.7 Wait for the green Battery Status LED to start flashing before proceeding to test the battery.

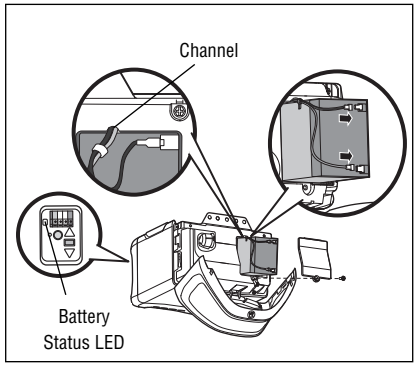

2 Test the battery

2.1 Unplug the garage door opener. The battery status LED will either glow solid orange indicating opener is operating on battery power or will flash indicating low battery power.

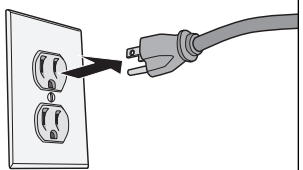

NOTE: *Make sure the garage door opener is unplugged.*

2.2 Open and close the door using the remote control or door control.

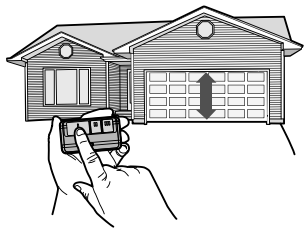

** The garage door opener may run slower if the battery is not fully charged. The battery will take 24 hours to fully charge.*

2.3 Plug in the garage door opener. Verify the battery status LED is flashing green, indicating the battery is charging.

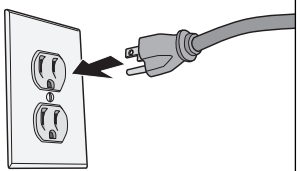

BATTERY STATUS LED

Tip: *The Battery Status LED is most visible with the garage door opener light off.*

Battery does not have to be fully charged to operate the garage door opener.

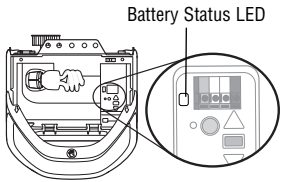

GREEN LED:

All systems are normal.

- A solid green LED light indicates the battery is fully charged.
- A flashing green LED indicates the battery is being charged.

ORANGE LED:

The garage door opener has lost power and is in battery backup mode.

- A solid orange LED with beep, sounding approximately every 2 seconds, indicates the garage door opener is operating on battery power.
- A flashing orange LED with beep, sounding every 30 seconds, indicates the battery is low.

RED LED:

The garage door opener's 12V battery needs to be replaced.

- A solid red LED with beep, sounding every 30 seconds, indicates the 12V battery will no longer hold a charge and needs to be replaced. Please call for replacement battery to allow your system to operate during a power outage.

CHARGE THE BATTERY

The battery will take 24 hours to fully charge. A fully charged battery supplies 12 Vdc to the garage door opener for one to two days of normal operation during an electrical power outage. Once the battery voltage drops too low, the battery will no longer operate. After the electrical power has been restored, the battery will recharge within 24 hours. The battery will last 3 to 5 years with normal usage. To obtain maximum battery life and prevent damage, disconnect the battery when the garage door opener is unplugged for an extended period of time.

NOTE: *Door operation may be limited until the battery is fully charged. The garage door opener lights will not turn on during battery backup mode.*

IMPORTANT SAFETY INSTRUCTIONS

⚠ WARNING

To reduce the risk of SEVERE INJURY or DEATH:

1. READ AND FOLLOW ALL WARNINGS AND INSTRUCTIONS.
2. ALWAYS keep remote controls out of reach of children. NEVER permit children to operate or play with garage door control push buttons or remote controls.
3. ONLY activate garage door when it can be seen clearly, it is properly adjusted, and there are no obstructions to door travel.
4. ALWAYS keep garage door in sight until completely closed. NO ONE SHOULD CROSS THE PATH OF THE MOVING DOOR.
5. NO ONE SHOULD GO UNDER A STOPPED, PARTIALLY OPENED DOOR.
6. If possible, use emergency release handle to disengage trolley ONLY when garage door is CLOSED. Weak or broken springs or unbalanced door could result in an open door falling rapidly and/or unexpectedly.
7. NEVER use emergency release handle unless garage doorway is clear of persons and obstructions.
8. NEVER use handle to pull garage door open or closed. If rope knot becomes untied, you could fall.
9. After ANY adjustments are made, the safety reversal system MUST be tested.
10. Safety reversal system MUST be tested every month. Garage door MUST reverse on contact with 1-1/2" high (3.8 cm) object (or a 2x4 laid flat) on the floor.
11. ALWAYS KEEP GARAGE DOOR PROPERLY BALANCED (see page 2). An improperly balanced door may NOT reverse when required and could result in SEVERE INJURY or DEATH.
12. ALL repairs to cables, spring assemblies and other hardware, ALL of which are under EXTREME tension, MUST be made by a trained door systems technician.
13. ALWAYS disconnect electric power to garage door opener BEFORE making ANY repairs or removing covers.
14. This operator system is equipped with an unattended operation feature. The door could move unexpectedly. NO ONE SHOULD CROSS THE PATH OF THE MOVING DOOR.
15. DO NOT enable the Timer-to-Close functionality if operating either one-piece or swinging garage doors. To be enabled ONLY when operating a sectional door.
16. **SAVE THESE INSTRUCTIONS.**

Features

Your garage door opener is equipped with features to provide you with greater control over your garage door operation.

TIMER-TO-CLOSE

The Timer-to-Close feature automatically closes the door after a specified time period that can be adjusted using the door control. Prior to the door closing there will be an audible and visual alert.

MYQ™

MyQ™ technology uses a 900MHz signal to provide two-way communication between the garage door opener and MyQ™ accessories. Your garage door opener is compatible with up to 8 MyQ™ accessories.

SECURITY✚2.0™ REMOTE CONTROLS AND DOOR CONTROLS

Your garage door opener is compatible with up to 2 Security✚2.0™ door controls.

Your garage door opener has already been programmed at the factory to operate with your remote control, which changes with each use, randomly accessing over 100 billion new codes. The garage door opener is compatible with up to 8 remote controls and 1 keyless entry.

THE PROTECTOR SYSTEM® (SAFETY REVERSING SENSORS)

When properly connected and aligned, the safety reversing sensors will detect an obstruction in the path of the infrared beam. If an obstruction breaks the infrared beam while the door is closing, the door will stop and reverse to full open position, and the opener lights will flash 10 times. If the door is fully open, and the safety reversing sensors are not installed, or are misaligned, the door will not close from a remote control. However, you can close the door if you hold the button on the door control or keyless entry until the door is fully closed. The safety reversing sensors do no effect the opening cycle.

ENERGY CONSERVATION

For energy efficiency the garage door opener will enter sleep mode when the door is fully closed. The sleep mode shuts the garage door opener down until activated. The sleep mode is sequenced with the garage door opener light bulb; as the light bulb turns off the sensor LEDs will turn off and whenever the garage door opener lights turn on the sensor LEDs will light. The garage door opener will not go into the sleep mode until the garage door opener has completed 5 cycles upon power up.

LIGHTS

The garage door opener light bulbs will turn on when the opener is initially plugged in; power is restored after interruption, or when the garage door opener is activated. The lights will turn off automatically after 4-1/2 minutes. An incandescent A19 light bulb (100 watt maximum) or for maximum energy efficiency a 26W (100W equivalent) compact fluorescent light (CFL) bulb may be used.

LIGHT FEATURE

The garage door opener is equipped with an added feature; the lights will turn on when someone enters through the open garage door and the safety reversing sensor infrared beam is broken. For added control over the light bulbs on your garage door opener, see the Door Control section.

USING YOUR GARAGE DOOR OPENER

The garage door opener can be activated through a wall-mounted door control, remote control, wireless keyless entry or MyQ™ accessory.

When the door is closed and the garage door opener is activated the door will open. If the door senses an obstruction or is interrupted while opening the door will stop. When the door is in any position other than closed and the garage door opener is activated the door will close. If the garage door opener senses an obstruction while closing, the door will reverse. If the obstruction interrupts the sensor beam the garage door opener lights will blink 10 times. However, you can close the door if you hold the button on the door control or keyless entry until the door is fully closed. The safety reversing sensors do no effect the opening cycle.

The safety reversing sensor must be connected and aligned correctly before the garage door opener will move in the down direction.

Door Control

SYNCHRONIZE THE DOOR CONTROL

To synchronize the door control to the garage door opener, press the push bar until the garage door opener activates (it may take up to 3 presses). Test the door control by pressing the push bar, each press of the push bar will activate the garage door opener.

USING THE DOOR CONTROL

SMART CONTROL PANEL

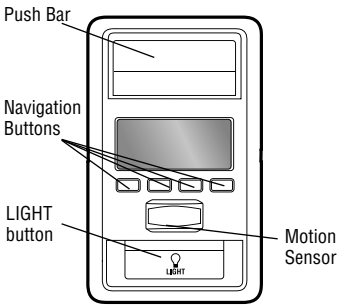

MOTION-DETECTING CONTROL PANEL

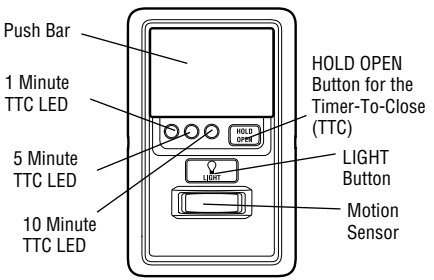

PUSH BAR

Press the push bar to open or close the door.

LIGHT BUTTON

Press the LIGHT button to turn the garage door opener lights on or off. When the lights are turned on they will stay on until the LIGHT button is pressed again, or until the garage door opener is activated. Once the garage door opener is activated the lights will turn off after the specified period of time (the factory setting is 4-1/2 minutes). The LIGHT button will not control the lights when the door is in motion. The duration of the light timing can be adjusted using the door control.

NAVIGATION BUTTONS (SMART CONTROL PANEL ONLY)

Use the navigation buttons to make selections and program features.

SCREEN (SMART CONTROL PANEL ONLY)

The screen will display the time and temperature until the menu button is pressed, and then it will display the menu options. If there is a problem with the garage door opener the screen will display the Diagnostic Code. Refer to the *Troubleshooting* section.

The following features are accessible through the screen using the navigation buttons on the Smart Control Panel or by lifting the push bar on the Motion-Detecting Control Panel:

LEARN A DEVICE

Any compatible remote controls, wireless keyless entry, or MyQ™ accessories can be programmed to the garage door opener by accessing the menu and using the navigation buttons on the Smart Control Panel or by pressing the Learn button on the Motion-Detecting Control Panel.

LOCK

The LOCK feature is designed to prevent activation of the garage door opener from remote controls while still allowing activation from the door control and keyless entry. This feature is useful for added peace of mind when the home is empty (i.e. vacation).

TIMER-TO-CLOSE (TTC)

DO NOT enable TTC if operating a one-piece door. TTC is to be used ONLY with sectional doors. Factory default is set to off. TTC can be set to automatically close your garage door from the fully open position after a specified period of time (1, 5, 10 minute intervals). The Smart Control Panel also has a custom setting up to 99 minutes. The garage door opener will beep and the lights will flash before closing the door. The screen on the door control will display the status of the TTC such as time to close, paused, or an error. If the door encounters an obstruction while closing, the garage door opener will make a second attempt to close the door. If the obstruction has not been cleared after the second attempt, the garage door opener will reverse open, stop and WILL NOT close until the obstruction has been cleared. TTC WILL NOT work if the garage door opener is operating by battery power or if the safety reversing sensors are misaligned. This feature is NOT intended to be the primary method of closing the door. **A keyless entry should be installed in the event of an accidental lock out when using this feature.**

AUTOMATIC LIGHT

Motion Sensor

Factory default is set to on. This feature will automatically turn on the garage door opener lights when motion is sensed. The lights will come on for the set period of time, then shut off. If using the garage door opener light as a work light disable the Automatic Light Feature, otherwise the light will turn off automatically if you are beyond the range of the sensor.

The lights will turn on when someone enters through the open garage door and the safety reversing sensor infrared beam is broken.

MOTION-DETECTING CONTROL PANEL SETUP

TIMER-TO-CLOSE (TTC)

NOTE: *DO NOT enable TTC if operating a one-piece door. TTC is to be used ONLY with sectional doors.*

Activate:
Press and hold the ON button until one of the TTC LEDs light up.
Then press the ON button again to cycle through the time interval options (the corresponding TTC LED will light for each time interval). The garage door opener light bulbs will blink as confirmation.

Deactivate:
Press and hold the OFF button until all TTC LEDs turn off and a beep is heard from the motor unit.

Temporarily hold door open (suspend TTC):
Press and release the HOLD OPEN button. Press the HOLD OPEN button again to resume normal TTC operation.

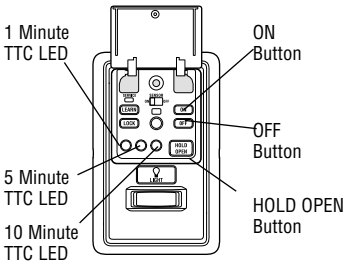

LOCK

Activate:
Press and hold the LOCK button for 2 seconds. The command LED will flash as long as the lock feature is activated and your handheld remote control will not operate your door at this time.

Deactivate:
Press and hold the LOCK button again for 2 seconds. The command LED will stop flashing and normal operation will resume.

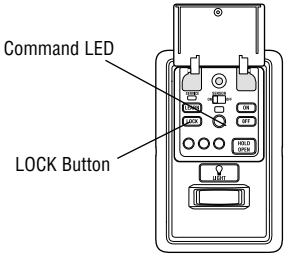

LIGHT

To change the amount of time the garage door opener lights will stay on:
Press and hold the LOCK button until the garage door opener lights flash.* The time interval is indicated by the number of flashes.

NUMBER OF TIMES GARAGE DOOR OPENER LIGHTS FLASH	TIME THE GARAGE DOOR OPENER LIGHT STAYS ON
1	1 ½ Minutes
2	2 ½ Minutes
3	3 ½ Minutes
4	4 ½ Minutes

To cycle through the time intervals repeat the step above.

LIGHT FEATURE

Deactivate:
Press and hold the LIGHT button until the garage door opener lights turn on, then off again.*

Activate:
Start with the garage door opener lights on. Press and hold the LIGHT button until the garage door opener lights turn off, then on again.*

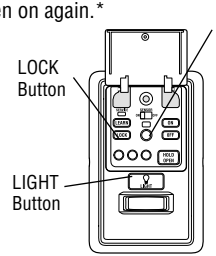

NOTE: *If the command LED is continuously blinking, the Lock feature needs to be deactivated.*

* Approximately 10 seconds

MOTION SENSOR

Activate/Deactivate:
Slide the motion sensor switch ON or OFF.

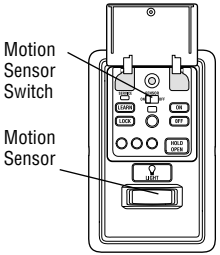

SMART CONTROL PANEL SETUP

MENU NAVIGATION

The features on the door control can be programmed through a series of menus on the screen and the navigation buttons. Refer to the descriptions below.

SCREEN

The main screen displays the time, temperature, and current battery charge (if applicable).

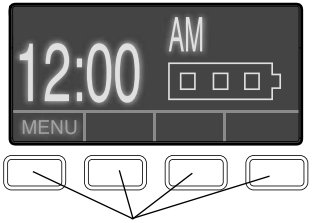

Navigation Buttons

FEATURES

Press the navigation button below "MENU" to view the Features menu.

CLOCK SETUP: Set the time, choose 12 or 24 hour clock and show/hide clock.

TTC SETTINGS (for sectional doors ONLY): Set the Timer-to-Close feature off/on and set the time interval before door closes. ***NOTE:*** *DO NOT enable TTC if operating a one-piece door. TTC is to be used ONLY with sectional doors.*

LOCK: Enable/disable lock.

PROGRAM: Add remote controls, MyQ™ devices, an extra remote button to control your garage door opener lights, or a keyless entry.

SETTINGS

Press the navigation button below the down arrow till you see TEMPERATURE to view the Settings menu.

TEMPERATURE: Display the temperature in Fahrenheit or Celsius and show/hide the temperature.

LANGUAGE: Select a language (English, French, or Spanish).

LIGHT SETTINGS: Set duration for garage door opener light to stay on after operation, selectable range of 1-1/2 to 4-1/2 minutes. Turn the Motion sensor off/on, and turn the entry light feature off/on.

CONTRAST: Adjust the contrast of the screen.

To program a remote control or keyless entry to the garage door opener using the door control see page 39.

Remote Control

Your garage door opener has been programmed at the factory to operate with your remote control. The remote control can be programmed using the door control or the garage door opener. To program additional remote controls refer to the instructions provided with the additional remote controls or visit www.chamberlain.com.

TO ADD, REPROGRAM, OR CHANGE A REMOTE CONTROL/KEYLESS ENTRY PIN USING THE MOTION-DETECTING CONTROL PANEL

1 Press the LEARN button on the door control to enter Programming Mode.

The command LED will flash once.

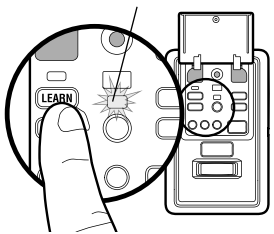

2 Press the LEARN button again, the LED will flash once.

The command LED will flash once again.

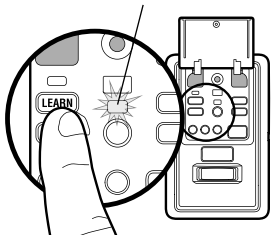

3a Press the button on the remote control that you wish to operate your garage door.

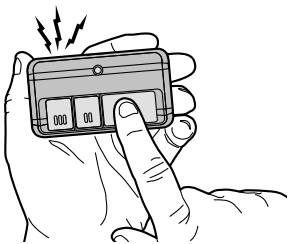

OR

3b Enter a 4-digit personal identification number (PIN) of your choice on the keyless entry keypad. Then press the ENTER button.

? ? ? ?

PIN

The garage door opener lights will flash (or two clicks will be heard) when the code has been programmed.
Repeat the steps above for programming additional remote controls or keyless entry devices.

TO ADD, REPROGRAM, OR CHANGE A REMOTE CONTROL/KEYLESS ENTRY PIN USING THE SMART CONTROL PANEL

1 Press the navigation button below "MENU" to view the Features menu.

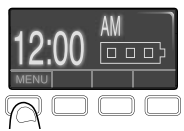

2 Use the navigation buttons to scroll to "PROGRAM" and press the navigation button under ↳ to continue.

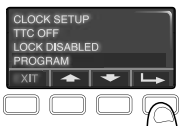

3 Select "REMOTE" or "KEYPAD" to program from the program menu. Press ↳ to continue.

4a Press the button on the remote control that you wish to operate your garage door.

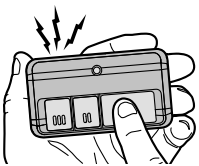

OR

4b Enter a 4-digit personal identification number (PIN) of your choice on the keyless entry keypad. Then press the ENTER button.

? ? ? ?

PIN

Remote Control

PROGRAM A REMOTE USING THE LEARN BUTTON

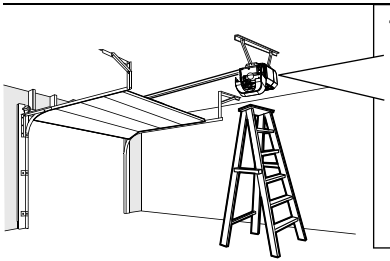

1 Press and release the Learn button on the garage door opener. The Learn indicator light will glow steadily for 30 seconds.

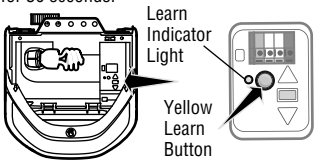

2 Within 30 seconds, press and hold the button on the remote control.

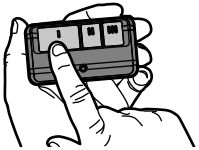

3 Release the button when the garage door opener light blinks. It has learned the code. If light bulbs are not installed, two clicks will be heard.

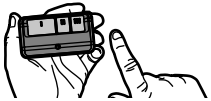

When replacing the light lens cover, ensure the antenna wires are hanging straight down.

To Erase the Memory

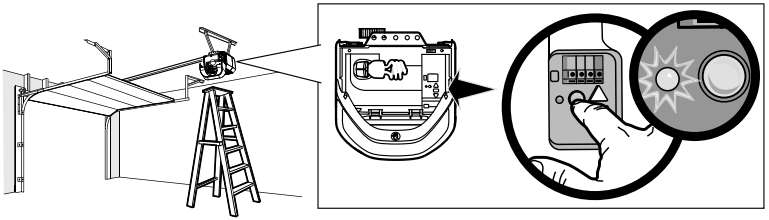

ERASE ALL REMOTE CONTROLS AND KEYLESS ENTRIES

1 Press and hold the learn button on garage door opener until the learn LED goes out (approximately 6 seconds). All remote control and keyless entry codes are now erased.

Reprogram any accessory you wish to use.

ERASE ALL DEVICES

1 Press and hold the learn button on garage door opener until the learn LED goes out (approximately 6 seconds).

2 Immediately press and hold the learn button again until the learn LED goes out. All codes are now erased.

Reprogram any accessory you wish to use.

To Open the Door Manually

⚠ WARNING

To prevent possible SERIOUS INJURY or DEATH from a falling garage door:

- If possible, use emergency release handle to disengage trolley ONLY when garage door is CLOSED. Weak or broken springs or unbalanced door could result in an open door falling rapidly and/or unexpectedly.
- NEVER use emergency release handle unless garage doorway is clear of persons and obstructions.
- NEVER use handle to pull door open or closed. If rope knot becomes untied, you could fall.

DISCONNECT THE TROLLEY

1 The door should be fully closed if possible.

2 Pull down on the emergency release handle so the trolley release arm snaps to the vertical position. The door can now be raised and lowered as often as necessary.

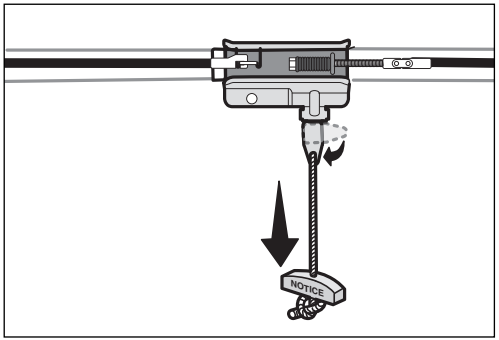

RECONNECT THE TROLLEY

1 Pull the emergency release handle toward the garage door opener so the trolley release arm snaps to the horizontal position.

The trolley will reconnect on the next UP or DOWN operation, either manually or by using the door control or remote control.

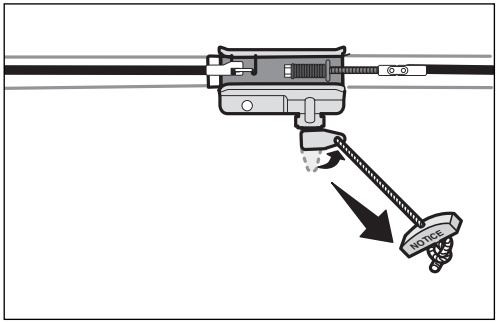

Maintenance

Maintenance Schedule

EVERY MONTH

- Manually operate door. If it is unbalanced or binding, call a trained door systems technician.
- Check to be sure door opens and closes fully. Adjust if necessary (refer to Adjustment section).
- Repeat the safety reverse test. Make any necessary adjustments (refer to Adjustment section).

EVERY YEAR

- Oil door rollers, bearings and hinges. The garage door opener does not require additional lubrication. Do not grease the door tracks.

EVERY TWO TO THREE YEARS

- Test the battery and consider replacing the battery to ensure the garage door opener will operate during an electrical power outage.

The Remote Control Battery

⚠ WARNING

To prevent possible SERIOUS INJURY or DEATH:

- NEVER allow small children near batteries.
- If battery is swallowed, immediately notify doctor.

To reduce risk of fire, explosion or chemical burn:

- Replace ONLY with 3V2032 coin batteries.
- DO NOT recharge, disassemble, heat above 212°F (100°C) or incinerate.

The 3V2032 lithium battery should produce power for up to 5 years. If the battery is low, the remote control's LED will not flash when the button is pressed. To replace battery pry open the case as shown. Insert battery positive side up.

Replace the batteries with only 3V2032 coin cell batteries.

Dispose of old batteries properly.

Pry open the case first in the middle (1), then at each side (2 and 3) with the visor clip.

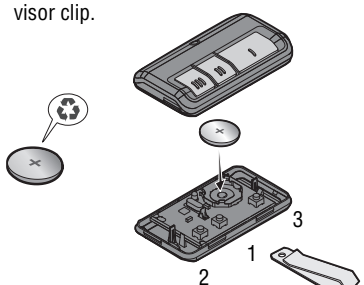

NOTICE: To comply with FCC and/or Industry Canada (IC) rules, adjustment or modifications of this transceiver are prohibited. THERE ARE NO USER SERVICEABLE PARTS.

This device complies with Part 15 of the FCC rules and IC RSS-210. Operation is subject to the following two conditions: (1) this device may not cause harmful interference, and (2) this device must accept any interference received, including interference that may cause undesired operation.

AVIS : Les règles de la FCC et/ou d'Industrie Canada (IC) interdisent tout ajustement ou toute modification de ce récepteur. IL N'EXISTE AUCUNE PIÈCE SUSCEPTIBLE D'ÊTRE ENTRETENUE PAR L'UTILISATEUR.

Cet appareil est conforme aux dispositions de la partie 15 du règlement de la FCC et de la norme IC RSS-210. Son utilisation est assujettie aux deux conditions suivantes : (1) ce dispositif ne peut causer des interférences nuisibles, et (2) ce dispositif doit accepter toute interférence reçue, y compris une interférence pouvant causer un fonctionnement non souhaité.

Troubleshooting

Diagnostic Chart

Your garage door opener is programmed with self-diagnostic capabilities. The UP and DOWN arrows on the garage door opener flash the diagnostic codes.

DIAGNOSTIC CODE	UP ARROW	DOWN ARROW	SYMPTOM	CAUSE	RESOLUTION
1-1	**1 FLASH**	**1 FLASH**	The garage door opener will not close and the light(s) will flash	Safety sensors are not installed, connected, or wires may be cut	Inspect sensor wires for a disconnected or cut wire(s). If the sending sensor with the amber LED is NOT lit, check the wire and connections for that sensor. If sending sensor LED is lit, check the wire connections leading to the receiving sensor (green LED). Reattach wire or replace wire (22 gauge wire) as needed. If pre-wired home, check the splices. See page 26 for installation. Close the garage door using the remote control or the door control.
1-2	**1 FLASH**	**2 FLASHES**	The garage door opener will not close and the light(s) will flash	Safety sensor wire shorted or reversed	Inspect sensor wire for incorrect wiring or a pinched wire. If the sending sensor (amber LED) is not lit, check the wire leading to and from that sensor. Check staple points. If sending sensor LED is lit, check the wire leading to the receiving sensor (green LED). Reattach wire or replace wire (22 gauge wire) as needed. If pre-wired home, check the splices. See page 26 for installation. Close the garage door using the remote control or the door control.
1-3	**1 FLASH**	**3 FLASHES**	Wall-mounted door control will not function	The wires for the door control are shorted or the door control is faulty	Inspect door control wires for a short (staple in wire), replace wire (22 gauge wire) as needed. After installing new door control wires, if door control still does not operate garage door opener, replace the door control.
1-4	**1 FLASH**	**4 FLASHES**	The garage door opener will not close the door and the light(s) flash	Misaligned or obstructed safety sensors	Realign the receiving sensor (green LED) by ensuring the LED is steady and not flickering. A flicker of the safety sensor LED indicates a misalignment. Make sure nothing is hanging or mounted on the door interrupting the sensor's path while closing. Close the garage door using the remote control or the door control.
1-5	**1 FLASH**	**5 FLASHES**	The garage door opener clicks but no movement	Bad logic board	Replace the logic board.
			The opener runs approximately 6-8" and stops and/or reverses	Communication error to travel module	Disconnect all power, remove cover, and locate the travel module. Ensure the wires for travel module are connected, if wires are connected, then replace the travel module.
3-3	**3 FLASHES**	**3 FLASHES**	The garage door opener is idle and the battery LED is constantly flashing green	Battery LED flashing Green, charging circuit stops and starts to drain causing battery charging status.	Replace the logic board.

Diagnostic Chart

Your garage door opener is programmed with self-diagnostic capabilities. The UP and DOWN arrows on the garage door opener flash the diagnostic codes.

DIAGNOSTIC CODE	UP ARROW	DOWN ARROW	SYMPTOM	CAUSE	RESOLUTION
4-1	**4 FLASHES**	**1 FLASH**	Door is closing, stops and reverses	Obstruction, binding or sticking door	If your door is binding or sticking, contact a trained door systems technician. If your door is okay, reprogram the travel, refer to page 30.
4-2	**4 FLASHES**	**2 FLASHES**	The door stops while opening for no apparent reason	Obstruction, binding or sticking door	Manually open and close the door. Check for binding or obstructions. For further information refer to page 2.
4-3	**4 FLASHES**	**3 FLASHES**	The door reverses for no apparent reason or after touching the floor	Obstruction, binding or sticking door	If your door is binding or sticking, contact a trained door systems technician. If your door is okay, reprogram the travel, refer to page 30.
4-4	**4 FLASHES**	**4 FLASHES**	My door reverses for no apparent reason or after touching the floor	Obstruction, binding or sticking door	Manually open and close the door. Check for binding or obstructions. For further information refer to page 2.
4-5	**4 FLASHES**	**5 FLASHES**	The opener runs approximately 6-8" and stops and/or reverses	Communication error to travel module	Disconnect all power, remove cover, and locate the travel module. Ensure the wires for travel module are connected, if wires are connected, then replace the travel module.
4-6	**4 FLASHES**	**6 FLASHES**	The door reverses for no apparent reason while traveling down	Safety sensors were temporarily obstructed or misaligned	Review Diagnostic Codes 1-1, 1-2, and 1-4 correct as necessary. If problem persists remove the sensors from the brackets and realign the sensors ensuring the LED's are steady and not flickering. Check for a temporary obstruction such as a rope attached to the door. Excessive vibration on the door rails may cause the sensors to be misaligned while the door is closing, secure rails or re-install the sensor brackets to the wall or floor, refer to page 24.

These are additional troubleshooting issues that will not show up in the diagnostic codes:

My garage door opener beeps every 30 seconds:

Refer to the *Battery Status LED* section on page 33.

My remote control will not activate the door:

- Verify the Lock feature is not activated on the door control.
- Reprogram the remote control.
- If the remote control will still not activate the door check the diagnostic codes to ensure the garage door opener is working properly.
- Ensure both antenna wires are hanging down from the garage door opener.

My garage door opener light(s) will not turn off when the door is open:

The garage door opener is equipped with a feature that turns the light on when the safety reversing sensors have been obstructed or when the motion sensor on the door control detects movement in the garage. These features can be disabled using the door control, refer to the *Door Control* section.

My neighbor's remote control opens my garage door:

Erase the memory from your garage door opener and reprogram the remote control(s).

Repair Parts

Rail Assembly Parts

	DESCRIPTION	PART NUMBER
1	*Belt*	**41A5250**
2	*Pulley*	**144C56**
3	*Master Link Kit*	**4A1008**
4	*Rail*	**41A5665-2**
5	*Trolley Assembly*	**41C5141-1**
6	*"U" Bracket*	**12D598-1**
	NOT SHOWN	
	Wear Pads	**183A163**

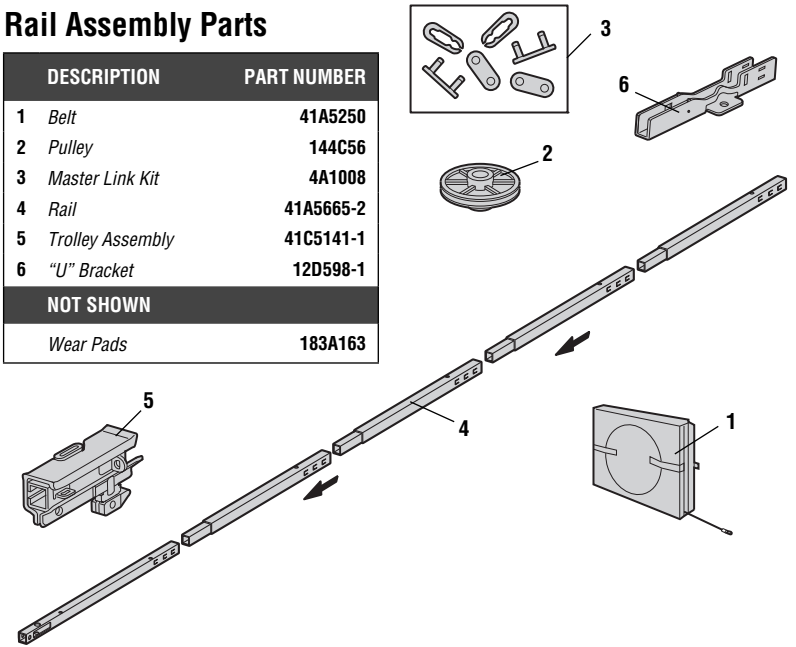

Installation Parts

	DESCRIPTION	PART NUMBER
1	*Curved Door Arm*	**178B35**
2	*Door Bracket with Clevis Pin and Fastener*	**41A5047-1**
3	*Emergency Release Rope and Handle*	**41A2828**
4	*Hanging Brackets*	**12B776**
5	*Header Bracket with Clevis Pin and Fastener*	**41A5047-2**
6	*Remote Control Visor Clip*	**29B137**
7	*Safety Sensor Bracket*	**41A5266-1**
8	*Safety Sensor Kit: Receiving and sending sensors with 3 feet (.9 m) wire*	**41A5034**
9	*Straight Door Arm*	**178B34**
10	*White and Red/White Wire:*	**41C5141-1**
11	*3V2030 Lithium Battery*	**10A20**
12	*Battery 12V*	**41A6357-1**

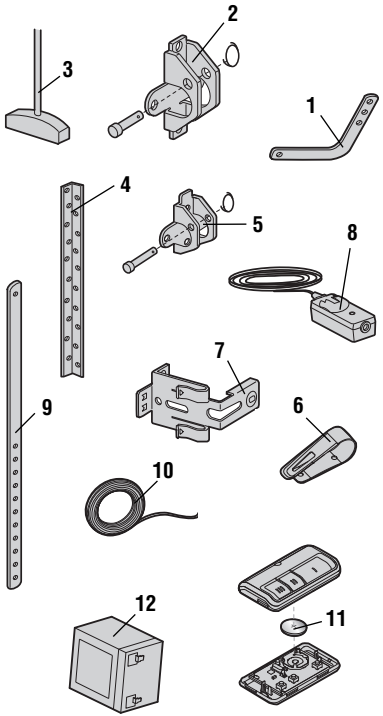

Accessories

	DESCRIPTION	PART NUMBER
1	*Motion-Detecting Control Panel*	**41A7327-1**
2	*Smart Control Panel®*	**41A7305-1**
3	*Remote Control*	**953ESTD**

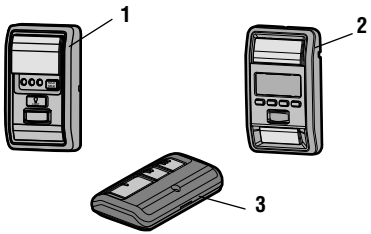

Garage Door Opener Parts

	DESCRIPTION	PART NUMBER
1	*Sprocket Cover with Screws*	**41C589-2**
2	*End Panel with all labels and light socket*	**41D7638**
3	***Light Lens***	
	Model WD962KEV/KPEV	**41D7570**
	Model HD920EV	**41D7572**
	Model 349544	**41D7571**
4	*Light Socket*	**41C279**
5	*Transformer*	**41A7635**
6	***Cover***	
	Model WD962KEV/KPEV	**41A7260-6**
	Model HD920EV	**41A7620-3**
	Model 349544	**41A7620**
7	*Motor and Travel Module*	**41D1739-1**
8	*End Panel with all labels, light socket, and battery door*	**41D7639**
9	*Receiver Logic Board*	**45DCT**
10	*Line Cord*	**41B135**
11	*Filter Board with Screws*	**41B7611**
	NOT SHOWN	
	Wire Harness Kit	**41B7418**
	Travel Module	**41A7114-7**
	Battery 12V	**41A6357-1**

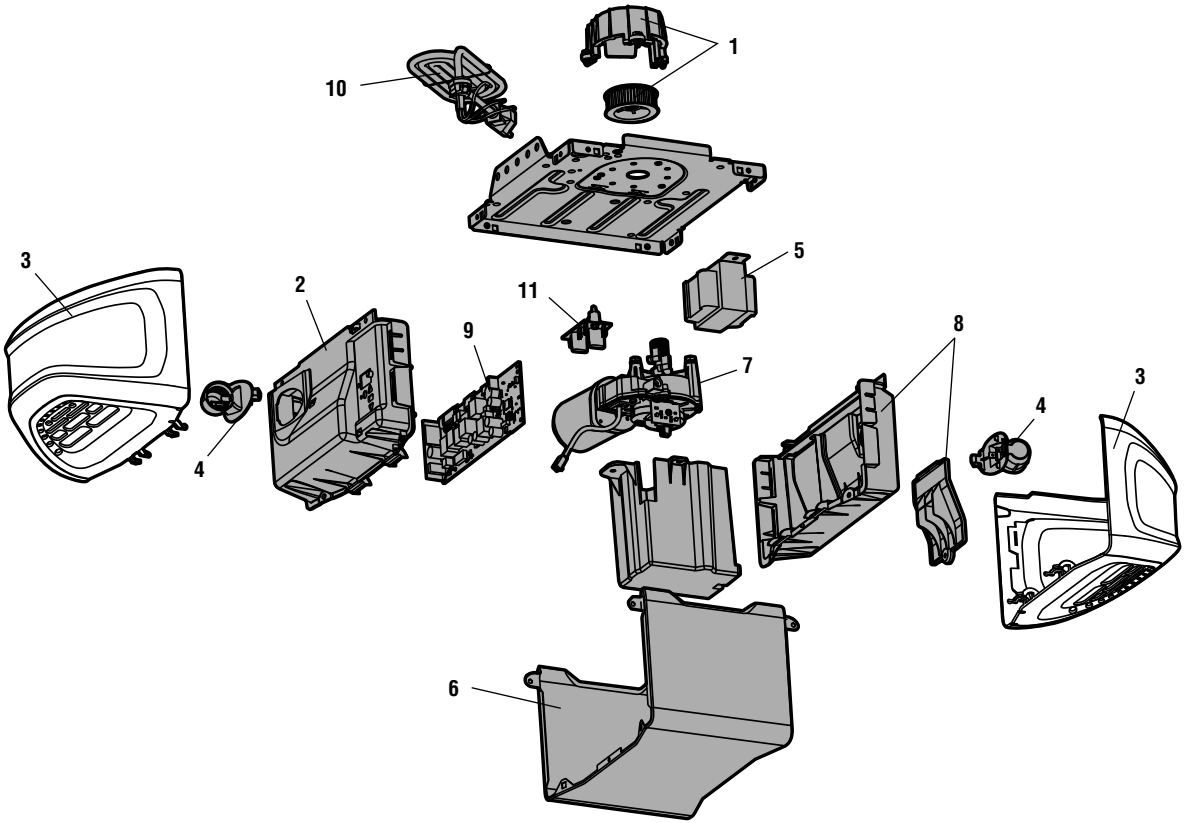

Contact Information

For installation and service information call:

1-800-528-9131

Before calling, please have the model number of the garage door opener. If you are calling about a Troubleshooting issue, it is recommended that you have access to your garage door opener while calling. If you are ordering a repair part please have the following information: part number, part name, and model number.

Address repair parts orders to:

The Chamberlain Group, Inc.
6050 S. Country Club Road
Tucson, AZ 85706

CHAMBERLAIN® FIVE YEAR LIMITED WARRANTY
LIFETIME MOTOR AND BELT LIMITED WARRANTY
ONE YEAR LIMITED WARRANTY FOR THE BATTERY BACKUP

The Chamberlain Group, Inc. ("Seller") warrants to the first retail purchaser of this product, for the residence in which this product is originally installed, that it is free from defect in materials and/or workmanship for a period of 60 full months from the date of purchase and that the motor and belt are free from defect in materials and/or workmanship for a period of the lifetime of the product. The proper operation of this product is dependent on your compliance with the instructions regarding installation, operation, and maintenance and testing. Failure to comply strictly with those instructions will void this limited warranty in its entirety.

If, during the limited warranty period, this product appears to contain a defect covered by this limited warranty, call 1-800-528-9131; toll free, before dismantling this product. Then send this product, pre-paid and insured, to our service center for warranty repair. You will be advised of shipping instructions when you call. Please include a brief description of the problem and a dated proof-of-purchase receipt with any product returned for warranty repair. Products returned to Seller for warranty repair, which upon receipt by Seller are confirmed to be defective and covered by this limited warranty, will be repaired or replaced (at Seller's sole option) at no cost to you and returned pre-paid. Defective parts will be repaired or replaced with new or factory-rebuilt parts at Seller's sole option.

ALL IMPLIED WARRANTIES FOR THE PRODUCT, INCLUDING BUT NOT LIMITED TO ANY IMPLIED WARRANTIES OF MERCHANTABILITY AND FITNESS FOR A PARTICULAR PURPOSE, ARE LIMITED IN DURATION TO THE FIVE YEAR LIMITED WARRANTY PERIOD SET FORTH ABOVE EXCEPT THE IMPLIED WARRANTIES WITH RESPECT TO THE BATTERY, WHICH IS LIMITED IN DURATION TO ONE YEAR, MOTOR AND BELT, WHICH ARE LIMITED IN DURATION TO THE LIFETIME LIMITED WARRANTY PERIOD FOR THE MOTOR AND BELT, AND NO IMPLIED WARRANTIES WILL EXIST OR APPLY AFTER SUCH PERIOD. Some states do not allow limitations on how long an implied warranty lasts, so the above limitation may not apply to you.

THIS LIMITED WARRANTY DOES NOT COVER NON-DEFECT DAMAGE, DAMAGE CAUSED BY IMPROPER INSTALLATION, OPERATION OR CARE (INCLUDING, BUT NOT LIMITED TO ABUSE, MISUSE, FAILURE TO PROVIDE REASONABLE AND NECESSARY MAINTENANCE, UNAUTHORIZED REPAIRS OR ANY ALTERATIONS TO THIS PRODUCT), LABOR CHARGES FOR REINSTALLING A REPAIRED OR REPLACED UNIT, REPLACEMENT OF BATTERIES IN REMOTE CONTROL TRANSMITTERS AND LIGHT BULBS OR UNITS INSTALLED FOR NON-RESIDENTIAL USE. THIS LIMITED WARRANTY DOES NOT COVER ANY PROBLEMS WITH, OR RELATING TO, THE GARAGE DOOR OR GARAGE DOOR HARDWARE, INCLUDING BUT NOT LIMITED TO THE DOOR SPRINGS, DOOR ROLLERS, DOOR ALIGNMENT OR HINGES. THIS LIMITED WARRANTY ALSO DOES NOT COVER ANY PROBLEMS CAUSED BY INTERFERENCE. ANY SERVICE CALL THAT DETERMINES THE PROBLEM HAS BEEN CAUSED BY ANY OF THESE ITEMS COULD RESULT IN A FEE TO YOU. UNDER NO CIRCUMSTANCES SHALL SELLER BE LIABLE FOR CONSEQUENTIAL, INCIDENTAL OR SPECIAL DAMAGES ARISING IN CONNECTION WITH USE, OR INABILITY TO USE, THIS PRODUCT. IN NO EVENT SHALL SELLER'S LIABILITY FOR BREACH OF WARRANTY, BREACH OF CONTRACT, NEGLIGENCE OR STRICT LIABILITY EXCEED THE COST OF THE PRODUCT COVERED HEREBY. NO PERSON IS AUTHORIZED TO ASSUME FOR US ANY OTHER LIABILITY IN CONNECTION WITH THE SALE OF THIS PRODUCT.

Some states do not allow the exclusion or limitation of consequential, incidental or special damages, so the above limitation or exclusion may not apply to you. This limited warranty gives you specific legal rights, and you may also have other rights, which vary from state to state.

Accessories

7702CB

Outside Quick Release:

Required for a garage with NO access door.

8808CB

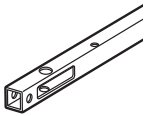

8 Foot (2.4 m) Rail Extension:

To allow an 8 foot (2.4 m) door to open fully.

8810CB

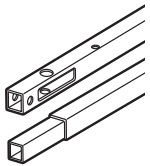

10 Foot (3 m) Rail Extension:

To allow a 10 foot (3 m) door to open fully.

41A5281

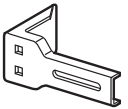

Extension Brackets:

(Optional) For safety reversing sensor installation onto the wall or floor. To order call: 1-800-528-9131.

PILCEV

Remote Light Control:

Control home lighting and garage doors with one remote. For use with plug-in lamps. Synchronize to work with MyQ™ compatible garage door openers and remote controls.

CLLP1

Laser Parking Assistant:

Park in the right spot every time! A laser beam is activated by your garage door opener and projected on to the dashboard of your vehicle to guide perfect parking.

CLSS1

System Surge Protector:

The Garage Door Opener Surge Protector is designed to protect Chamberlain garage door openers against damage from lightning and power surges. Easy to install.

AGDMEV

Garage Door Monitor:

Monitor open/closed status for up to 4 MyQ™ compatible garage door openers and close them from anywhere in the home.

953EV

Remote Control:

Works with ALL Chamberlain openers from 1993-present. MyQ™ Compatible. Includes visor clip.

956EV

Keychain Remote Control:

Works with ALL Chamberlain openers from 1993-present. MyQ™ Compatible. With key ring.

940EV

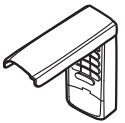

Wireless Keypad:

For use outside of the home to enable access to the garage using a 4-digit PIN. Works with ALL Chamberlain openers from 1993-present. MyQ™ Compatible.