TECHNICAL SPECIFICATIONS

Luxura® 5.5 Whirlpool Bath

LUX6634	WRL	2XX	Luxura 5.5 Whirlpool Bath Right Hand (F947)
LUX6634	WLR	2XX	Luxura 5.5 Whirlpool Bath Left Hand (F946)

Luxura® 5.5 Bath

LUX6634	BUX	XXX	Luxura 5.5 Bath (F948)

INSTALLATION NOTES
Refer to installation instructions included with fixture before beginning installation. Please confirm product availability and specifications before commencing with any installation work.

PRODUCT SPECIFICATIONS AND AVAILABILITY ARE SUBJECT TO CHANGE WITHOUT NOTICE.

KEY DIMENSIONS

DIMENSIONS
66” L x 34” W x 20” H
(1676 mm) L x (864 mm) W x (508 mm) H
DRAIN/OVERFLOW
A: 15-¼” (387 mm) B: 8-⅜” (213 mm)
CUTOUT
64” x 32”
TOTAL WEIGHT
F946, F947: 823 lb (373 kg) / 53 lb/sq. ft. (258 kg/m^2)
F948: 798 lb (362 kg) / 51 lb/sq. ft. (250 kg/m^2)
OPERATING GALLONAGE
58 U.S. Gal. (220 Liters)
PRODUCT WEIGHT
F946, F947: 90 lb (41 kg)
F948: 65 lb (29 kg)
SKIRT MOUNTING
Optional, U-Frame: P/N F956
ELECTRICAL SPECIFICATIONS MODELS F946, F947 ONLY
Requires a dedicated GFCI protected separate circuit.
Motor/Pump: 120 VAC, 15 AMP, 60 Hz.
RapidHeat™: 120 VAC, 15 AMP, 60 Hz.
HEATER (OPTIONAL) MODELS F946, F947 ONLY
Requires a dedicated GFCI protected separate circuit.
RapidHeat™: P/N S750000

Product Shown: Luxura 5 Whirlpool Bath Left Hand
Model: F946
* Measurements inside unit represent cutout in floor to allow for drain/overflow.

FEATURES, UPGRADES & ACCESSORIES

- Right and Left Hand Drain Location
- Accessories / Hardware:
  - Trip-Lever Drain Kit #X559
  - Rotary Drain Kit, 26” Cable #8730
  - TheraPro Jet Trim Kit: #GU44
  - AccuPro Jet Trim Kit: #GU45
- Trim Kit Finishes Available:
  - (827) – Chrome
  - (826) – Brushed Nickel
  - (845) – Oil Rubbed Bronze

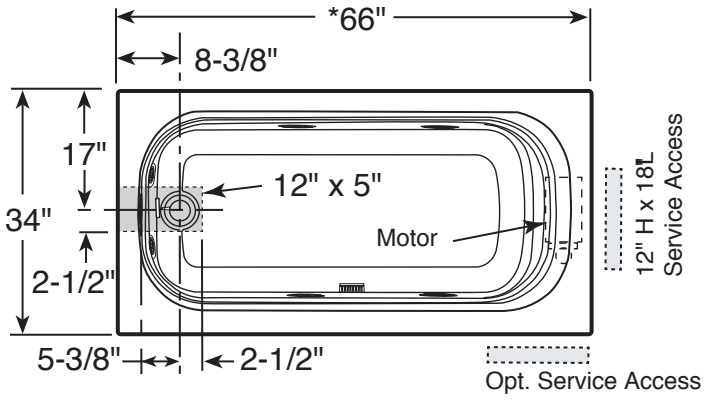

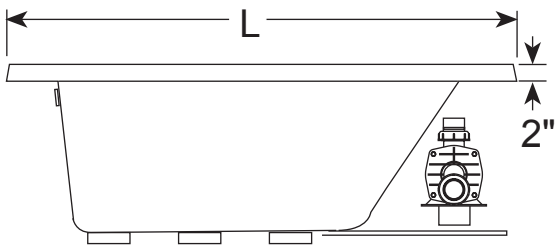

SIDE VIEW

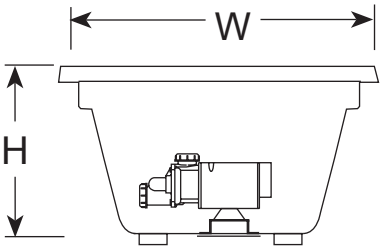

END VIEW

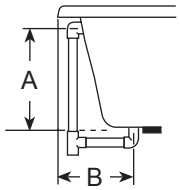

DRAIN/OVERFLOW

© 2010 Jacuzzi Luxury Bath • For additional information call Customer Service 800-288-4002 • *www.jacuzzi.com/technicalspecs*
Refer to installation instructions included with fixture before beginning installation. Please confirm product availability and specifications before commencing with any installation work.
PRODUCT SPECIFICATIONS AND AVAILABILITY ARE SUBJECT TO CHANGE WITHOUT NOTICE.

Download from Www.Somanuals.com. All Manuals Search And Download.

Free Manuals Download Website

http://myh66.com

http://usermanuals.us

http://www.somanuals.com

http://www.4manuals.cc

http://www.manual-lib.com

http://www.404manual.com

http://www.luxmanual.com

http://aubethermostatmanual.com

Golf course search by state

http://golfingnear.com

Email search by domain

http://emailbydomain.com

Auto manuals search

http://auto.somanuals.com

TV manuals search

http://tv.somanuals.com