MM-10 Miniature Subwoofer
MPS-488HP Power Supply

thinking sound

Keep these important operating instructions.
Check www.meyersound.com for updates.

DECLARATION OF CONFORMITY ACCORDING TO ISO/IEC GUIDE 22 AND EN 45014

Manufacturer's Name: Meyer Sound Laboratories Inc.

Manufacturer's Address: 2832 San Pablo Avenue
Berkeley, CA 94702-2204, USA

Declares that the product:

Product Names: MM-10 Miniature Subwoofer
MPS-488HP Power Supply

Product Options: All

Conforms to the following Product Specifications:

Safety: EN 60065:2002

Supplementary Information: The product herewith complies with the requirements of the Low Voltage Directive (LVD) 2006/95/EC.

Signature:

Ms. Margie Garza
Director of Quality
Meyer Sound Laboratories Inc.
Berkeley, California 94702 USA
Issued July 26, 2010

European Contact:
Your local Meyer Sound dealer or
Meyer Sound Germany, GmbH.

MM-10 Operating Instructions, PN 05.199.005.01 A

Printed in the U.S.A.

SYMBOLS USED

These symbols indicate important safety or operating features in this booklet and on the chassis:

Dangerous voltages: risk of electric shock	Important operating instructions	Frame or chassis	Protective earth ground
Pour indiquer les risques résultant de tensions dangereuses	Pour indequer important instructions	Masse, châssis	Terre de protection
Warnung vor gefährlicher elektrischer Spannung	Wichtige Betriebsanweisung oder Gebrauchsanleitung	Rahmen oder Gehäuse	Masse Schutzleiter
Para indicar voltajes peligrosos	Instrucciones importantes de funcionamiento y/o manteniento	Armadura o chassis	Tierra proteccionista

IMPORTANT SAFETY INSTRUCTIONS

1. Read these instructions.
2. Keep these instructions.
3. Heed all warnings.
4. Follow all instructions.
5. Do not use this loudspeaker near water.
6. Clean only with dry cloth.
7. Do not block any ventilation openings. Install in accordance with Meyer Sound's installation instructions.
8. Do not install near any heat sources such as radiators, heat registers, stoves, or other apparatus that produce heat.
9. Do not defeat the safety purpose of the grounding-type plug. A grounding type plug has two blades and a third grounding prong. The third prong is provided for your safety. If the provided plug does not fit into your outlet, consult an electrician for replacement of the obsolete outlet.
10. Protect the power cord from being walked on or pinched, particularly at plugs, convenience receptacles, and the point where they exit from the loudspeaker. The AC mains plug or appliance coupler shall remain readily accessible for operation.
11. Only use attachments/accessories specified by Meyer Sound.
12. If applicable, use only with the caster rails or rigging specified by Meyer Sound, or sold with the loudspeaker. Handles are for carrying only.

    CAUTION: Rigging should only be done by experienced professionals.

13. Unplug this loudspeaker during lightning storms or when unused for long periods of time.
14. Disconnect the mains plug before disconnecting the power cord from the loudspeaker.
15. Refer all servicing to qualified service personnel. Servicing is required when the loudspeaker has been damaged in any way, such as when the power-supply cord or plug has been damaged; liquid has been spilled or objects have fallen into the loudspeaker; rain or moisture has entered the loudspeaker; the loudspeaker has been dropped; or when for undetermined reasons the loudspeaker does not operate normally.

CAUTION: To reduce the risk of electric shock, do not expose this loudspeaker to rain or moisture. Do not install the loudspeaker in wet or humid locations without using weather protection equipment from Meyer Sound.

SAFETY SUMMARY

English

- To reduce the risk of electric shock, disconnect the loudspeaker from the AC mains before installing audio cable. Reconnect the power cord only after making all signal connections.
- Connect the loudspeaker to a two-pole, three-wire grounding mains receptacle. The receptacle must be connected to a fuse or circuit breaker. Connection to any other type of receptacle poses a shock hazard and may violate local electrical codes.
- Do not install the loudspeaker in wet or humid locations without using weather protection equipment from Meyer Sound.
- Do not allow water or any foreign object to get inside the loudspeaker. Do not put objects containing liquid on or near the unit.
- To reduce the risk of overheating the loudspeaker, avoid exposing it to direct sunlight. Do not install the unit near heat-emitting appliances, such as a room heater or stove.
- This loudspeaker contains potentially hazardous voltages. Do not attempt to disassemble the unit. The unit contains no user-serviceable parts. Repairs should be performed only by factory-trained service personnel.

Français

- Pour réduire le risque d'électrocution, débrancher la prise principale de l'haut-parleur, avant d'installer le câble d'interface allant à l'audio. Ne rebrancher le bloc d'alimentation qu'après avoir effectué toutes les connections.
- Branchez l'haut-parleur dans une prise de courant à 3 dérivations (deux pôles et la terre). Cette prise doit être munie d'une protection adéquate (fusible ou coupe-circuit). Le branchement dans tout autre genre de prise pourrait entraîner un risque d'électrocution et peut constituer une infraction à la réglementation locale concernant les installations électriques.
- Ne pas installer l'haut-parleur dans un endroit où il y a de l'eau ou une humidité excessive.
- Ne pas laisser de l'eau ou tout objet pénétrer dans l'haut-parleur. Ne pas placer de r´cipients contenant un liquide sur cet appareil, ni à proximité de celui-ci.
- Pour éviter une surchauffe de l'haut-parleur, conserver-la à l'abri du soleil. Ne pas installer à proximité d'appareils dégageant de la chaleur tels que radiateurs ou appareils de chauffage.
- Ce haut-parleur contient des circuits haute tension présentant un danger. Ne jamais essayer de le démonter. Il n'y a aucun composant qui puisse être réparé par l'utilisateur. Toutes les réparations doivent être effectuées par du personnel qualifié et agréé par le constructeur.

Deutsch

- Um die Gefahr eines elektrischen Schlages auf ein Minimum zu reduzieren, den Lautsprecher vom Stromnetz trennen, bevor ggf. ein Audio-Schnittstellensignalkabel angeschlossen wird. Das Netzkabel erst nach Herstellung aller Signalverbindungen wieder einstecken.
- Der Lautsprecher an eine geerdete zweipolige Dreiphasen-Netzsteckdose anschließen. Die Steckdose muß mit einem geeigneten Abzweigschutz (Sicherung oder Leistungsschalter) verbunden sein. Der Anschluß der unterbrechungsfreien Stromversorgung an einen anderen Steckdosentyp kann zu Stromschlägen führen und gegen die örtlichen Vorschriften verstoßen.
- Der Lautsprecher nicht an einem Ort aufstellen, an dem sie mit Wasser oder übermäßig hoher Luftfeuchtigkeit in Berührung kommen könnte.
- Darauf achten, daß weder Wasser noch Fremdkörper in das Innere den Lautsprecher eindringen. Keine Objekte, die Flüssigkeit enthalten, auf oder neben die unterbrechungsfreie Stromversorgung stellen.
- Um ein Überhitzen dem Lautsprecher zu verhindern, das Gerät vor direkter Sonneneinstrahlung fernhalten und nicht in der Nähe von wärmeabstrahlenden
- Haushaltsgeräten (z.B. Heizgerät oder Herd) aufstellen.
- Im Inneren diesem Lautsprecher herrschen potentiell gefährliche Spannungen. Nicht versuchen, das Gerät zu öffnen. Es enthält keine vom Benutzer reparierbaren Teile. Reparaturen dürfen nur von ausgebildetem Kundenienstpersonal durchgeführt werden.

Español

- Para reducir el riesgo de descarga eléctrica, desconecte de la red de voltaje el altoparlante antes de instalar el cable de señal de audio. Vuelva a conectar la alimentacion de voltaje una vez efectuadas todas las interconexiones de señalizacion de audio.
- Conecte el altoparlante a un tomacorriente bipolar y trifilar con neutro de puesta a tierra. El tomacorriente debe estar conectado a la protección de derivación apropiada (ya sea un fusible o un disyuntor). La conexión a cualquier otro tipo de tomacorriente puede constituir peligro de descarga eléctrica y violar los códigos eléctricos locales.
- No instale el altoparlante en lugares donde haya agua o humedad excesiva.
- No deje que en el altoparlante entre agua ni ningún objeto extraño. No ponga objetos con líquidos encima de la unidad ni cerca de ella.
- Para reducir el riesgo de sobrecalentamiento, no exponga la unidad a los rayos directos del sol ni la instale cerca de artefactos que emiten calor, como estufas o cocinas.
- Este altoparlante contiene niveles de voltaje peligrosos en potencia. No intente desarmar la unidad, pues no contiene piezas que puedan ser repardas por el usuario. Las reparaciones deben efectuarse únicamente por parte del personal de mantenimiento capacitado en la fábrica.

CONTENTS

CHAPTER 1: INTRODUCTION

HOW TO USE THIS MANUAL

Make sure to read these operating instructions in their entirety before configuring a loudspeaker system with MM-10s. In particular, pay close attention to material related to safety issues.

As you read these operating instructions, you will encounter the following icons for notes, tips, and cautions:

NOTE: A note identifies an important or useful piece of information relating to the topic under discussion.

TIP: A tip offers a helpful tip relevant to the topic at hand.

CAUTION: A caution gives notice that an action may have serious consequences and could cause harm to equipment or personnel, or could cause delays or other problems.

Information and specifications are subject to change. Updates and supplementary information are available on the Meyer Sound® website:

http://www.meyersound.com

Meyer Sound Technical Support is available at:

- **Tel:** +1 510 486.1166
- **Fax:** +1 510 486.8356
- **Email:** techsupport@meyersound.com

THE MM-10 MINIATURE SUBWOOFER

The MM-10 miniature subwoofer delivers low frequency for applications that require excellent audio quality from a compact system. Designed primarily as a companion to Meyer Sound's MM-4XP miniature loudspeaker, as well as the UP-4XP ultracompact loudspeaker, the MM-10 allows system designers to create full-range systems where space limitations are a concern.

MM-10 Miniature Subwoofer

The MM-10 features an operating frequency range of 33 Hz to 228 Hz with a conservatively rated maximum peak SPL of 123 dB. The MM-10 bass reflex cabinet houses a single 10-inch driver and a single-channel power amplifier complete with onboard processing, including a crossover, driver protection, and frequency and phase correction. The built-in crossover accepts full-range signals, facilitating basic daisy-chaining for signal distribution, eliminating the need for external crossovers in small setups.

The MM-10 subwoofer is available from the factory in three models — the MM-10XP, MM-10AC, and MM-10ACX — each offering different internal configurations and audio and power connectors (which cannot be upgraded).

The MM-10XP Subwoofer

The MM-10XP is powered by an external 48 V DC power supply, eliminating the need for wiring conduits while still preserving the advantages of self-powered loudspeaker systems. The unit's onboard amplifier and signal-processing circuits were designed to store DC power and tolerate voltage drops, thereby accommodating light-gauge cables and lengthy cable runs. The MM-10XP is available with either a Phoenix™ 5-pin male or sealed SwitchCraft® EN3™ male connector for receiving balanced audio and DC power. The EN3 connector is ideal for outdoor, all-weather use.

The MPS-488HP External Power Supply

MM-10XPs require an MPS-488HP external power supply. The single-space 19-inch rack unit receives balanced audio from its XLR female inputs and routes the audio, along with 48 V of DC power, to its channel outputs. The channel outputs — equipped with either Phoenix 5-pin male connectors or EN3 5-pin female connectors — can deliver DC power to up to eight MM-10XP subwoofers.

MPS-488HP Power Supply

Cable lengths up to 150 feet for DC power are possible when using 18-AWG wire, with just 1 dB of loss in peak SPL. Longer cable runs are possible for moderate applications that don't drive the subwoofers to maximum output, or for installations with heavier wire gauges.

The use of composite multiconductor cables (such as Belden® 1502) allows a single cable to carry both DC power and balanced audio to the MM-10XPs.

The MM-10AC Subwoofer

The MM-10AC is ideal for fixed installations and portable applications where AC power is readily available to power the unit. The MM-10AC includes an internal power supply and locking PowerCon connectors for AC input and AC loop output (for powering additional MM-10AC subwoofers). The MM-10AC receives audio from an XLR female input, and also includes an XLR male loop output for daisy-chaining audio signals.

The MM-10ACX Subwoofer

The MM-10ACX model includes onboard DC power and audio routing for driving a pair of MM-4XP miniature loudspeakers, or a single UP-4XP ultracompact loudspeaker, effectively placing the MM-10ACX at the heart of an extremely capable compact, full-range loudspeaker system.

Three XLR female inputs are included for receiving audio for the subwoofer and two satellite loudspeakers. The MM-10ACX is available with either Phoenix 5-Pin male or EN3 5-pin female satellite outputs. A two-channel stereo signal can be patched to the satellite inputs and summed and routed to the subwoofer if necessary.

MM-10 OPTIONS

Additional options for the MM-10 include the MUB-MM10 U-bracket for mounting the subwoofer on ceilings and walls; weather protection, complete with a rain hood, for outdoor all-weather use; and custom color finishes for installations and applications with specific cosmetic requirements.

MM-10 with MUB-MM10 U-Bracket

CHAPTER 2: THE MM-10XP SUBWOOFER

The MM-10XP is powered by an external 48 V DC power supply, eliminating the need for wiring conduits while still preserving the advantages of self-powered loudspeaker systems. The unit's onboard amplifier and signal-processing circuits were designed to store DC power and tolerate voltage drops, thereby accommodating light-gauge cables and lengthy cable runs.

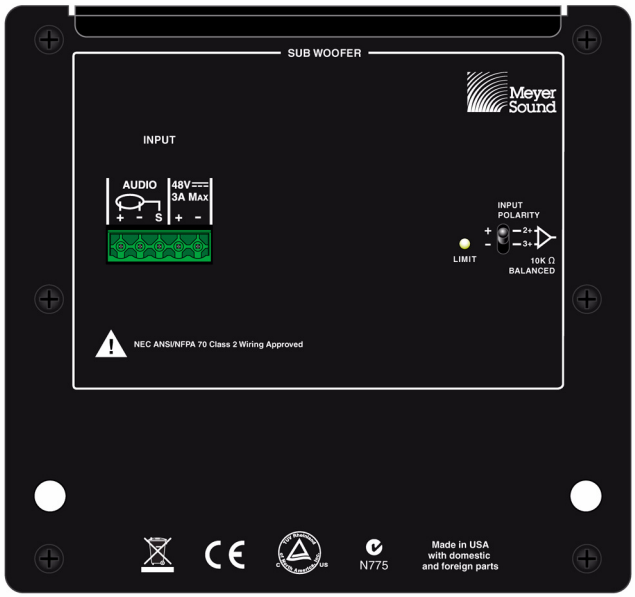

MM-10XP Rear Panel, Shown with Phoenix Connector

THE MM-10XP INPUT CONNECTOR

The MM-10XP subwoofer is available with either a Phoenix 5-pin male or SwitchCraft EN3 5-pin male connector for receiving DC power and balanced audio. The EN3 connector is ideal for outdoor, all-weather use. The connector's five pins include two for DC power (negative and positive) and three for balanced audio (shield, negative, and positive). These pins are clearly labeled on the MM-10XP rear panel. To function properly, the MM-10XP requires 48 V of DC power.

MM-10XP with Phoenix 5-Pin Male Connector

MM-10XP with EN3 5-Pin Male Connector

Depending on the subwoofer's connector, the MM-10XP ships with either a single Phoenix cable connector or an EN3-to-pigtail cable for constructing loudspeaker cables.

NOTE: The pin outputs for the MM-10XP EN3 connector is identical to that of the MM-4XP. However, the MM-10XP EN3 connector has been rotated to accommodate the unit's internal connections.

THE MM-10XP INPUT POLARITY SWITCH

The Input Polarity switch swaps the polarity of the audio source signal, which is sometimes necessary to acoustically align the subwoofer with other loudspeakers in the system. When the switch is in the up (non-inverting) position, the positive audio pin (+) is hot relative to the negative audio pin (–), resulting in a positive pressure wave when a positive signal is applied to the positive pin. When the switch is in the down (inverting) position, the negative audio pin (–) is hot relative to the positive audio pin (+), resulting in a positive pressure wave when a positive signal is applied to the negative pin.

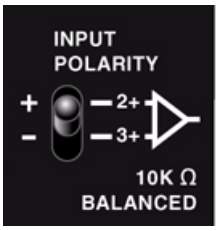

MM-10XP Input Polarity Switch

NOTE: The text for the Input Polarity switch on the MM-10XP rear panel shows Pin 2 and Pin 3, which is the convention used for the MM-10AC and MM-10ACX models. However, the MM-10XP Input Polarity switch actually reverses the polarity for Pin 4 and Pin 5 of its input connector.

THE MM-10XP LIMIT LED

The MM-10XP has a three-color Limit LED on its rear panel that changes color to indicate the subwoofer's status.

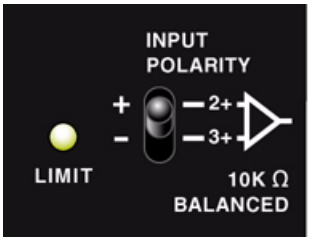

MM-10XP Limit LED

Powering On (Green)

When powering up the MM-10XP subwoofer, the following startup events occur and are indicated by the Limit LED:

1. The LED flashes green and then yellow during power up.
2. The LED turns solid green indicating the subwoofer is ready to reproduce audio.

CAUTION: If the Limit LED turns red and stays solid red after powering up and the audio is muted, the subwoofer has encountered a failure and may need to be serviced. Contact Meyer Sound Technical Support.

CAUTION: If the Limit LED turns solid red and the MM-10XP continues to output audio, though at reduced levels, the subwoofer's voltage may have dropped below 25 V DC. When these conditions are encountered, operation of the subwoofer should cease and its power supply and cabling should be verified.

Limiting (Yellow)

Limiting activity is indicated when the Limit LED turns yellow. When engaged, the limiter protects the subwoofer's driver and prevents signal peaks from causing excessive distortion in the subwoofer's amplifier, thereby preserving headroom and maintaining smooth frequency responses at high levels. When the level returns to normal, below the limiter's threshold, the LED turns green and limiting ceases.

The MM-10XP performs within its acoustical specifications at normal temperatures when the Limit LED is green, or if the LED turns yellow for two seconds or less and then returns to green for at least one second. If the LED remains yellow for longer than three seconds, the subwoofer enters hard limiting where:

- Increases to the input level have no effect.
- Distortion increases due to clipping and nonlinear driver operation.
- The drivers are subjected to excessive heat and excursion, which will compromise their life span and may eventually lead to damage over time.

CAUTION: The Limit LED turns yellow when the subwoofer's signal rises 2 dB above the limiting threshold, and indicates a safe, optimum level has been exceeded. If the MM-10XP subwoofers in a system begin to limit before reaching the desired SPL, consider adding more subwoofers to the system to achieve the desired SPL without exposing the subwoofers to excessive levels and possible overheating.

MM-10XP Temperature and Limiting

The Limit LED turns solid yellow when its heat sink temperature reaches 65° C (145° F), indicating the unit is reaching its maximum heat dissipation and a reduction in SPL is recommended. While the MM-10XP will continue to operate while the LED is yellow, the limiter threshold is lowered to a safe level (causing the output level to be lowered by 6 dB) to prevent the subwoofer from overheating. When the temperature of the heat sink cools to 50°C (122°F), the LED changes from yellow to green and the limiter threshold returns to normal.

Clipping (Red)

The Limit LED flashes red when its input signal causes the amplifier to overload. If the LED flashes red continuously, the subwoofer is severely overloaded and a reduction in the input level is recommended.

CAUTION: If the Limit LED turns solid red and the subwoofer continues to output audio, though at reduced levels, the subwoofer's voltage may have dropped below 25 V DC. When these conditions are encountered, operation of the subwoofer should cease and its power supply and cabling should be verified.

MM-10XP CURRENT DRAW AND CABLE REQUIREMENTS

Each MM-10XP subwoofer draws a maximum current of 3.31 A average and 3.45 A peak from the 48 V DC output of the MPS-488HP. The current draw for the MM-10XP is dynamic and fluctuates as operating levels change. The cabling between the MM-10XP and the MPS-488HP adds resistance and hence causes a voltage drop at the subwoofer. Because lower DC voltages compromise amplifier performance (peak SPL), and in some cases frequency response, cable resistance should be kept to a minimum.

NOTE: For long cable runs, you can use a large cable gauge for DC power and a separate balanced audio cable for audio.

Cable Lengths and Cable Gauges for MM-10XPs

When connecting an MM-10XP to an MPS-488HP channel output, you can use cable lengths of up to 150 feet with only 1 dB of peak SPL loss using 18 AWG wire. Longer cable lengths are possible with heavier wire gauges (see Table 1 and Table 2).

Table 1: MM-10XP Loudspeaker Cable Lengths (AWG)

Cable Gauge	Resistance (Ω/ft)	Approximate Max. Length
12 AWG	0.0016	600 ft
14 AWG	0.00253	375 ft
16 AWG	0.00402	237 ft
18 AWG	0.00636	150 ft
20 AWG	0.01008	87 ft

Table 2: MM-10XP Loudspeaker Cable Lengths (European)

Cable Gauge	Resistance (Ω/m)	Approximate Max. Length
2.50 mm^2	0.0052	157 m
1.50 mm^2	0.01076	87 m
1.00 mm^2	0.02087	45 m
0.75 mm^2	0.03307	27 m

NOTE: When connecting an MM-10XP to an MPS-488HP channel output, the total cable resistance should not exceed 2 ohms.

Calculating the Maximum Cable Length

The maximum cable length for an MM-10XP can be calculated with the following formula:

maximum length = 2 ohms / 2 * cable resistance

For example, the maximum length of an 18 AWG cable with a resistance of 0.00636 is 157.2 feet (2 / 2 * 0.00636).

WIRING MM-10XP LOUDSPEAKER CABLES WITH BELDEN 1502 CABLE

When wiring MM-10XP loudspeaker cables with Belden 1502 or an equivalent cable, use the conventions in Table 3. The red and black wires in the Belden 1502 cable have a thicker gauge than the other three wires and should be used for DC power. The blue, white, and shield wires are shielded together and should be used for audio.

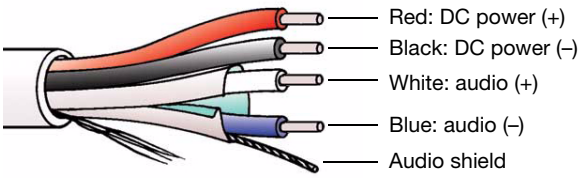

Belden 1502 Composite Cable

Table 3: Wiring MM-10XP Loudspeaker Cables with Belden 1502

Wire	Gauge	Gauge
Red	DC power, positive (+)	18 AWG
Black	DC power, negative (–)	18 AWG
White	Balanced audio, positive (+)	22 AWG
Blue	Balanced audio, negative (–)	22 AWG
Shield	Balanced audio, shield	24 AWG

Both ends of the loudspeaker cable should be wired so that the pins in the MM-10XP input connector align with those in the MPS-488HP channel output connector (see “Channel Inputs” on page 14).

Wiring EN3-to-Pigtail Cables

MM-10XPs equipped with EN3 connectors are shipped with one 10-foot EN3 5-pin female-to-pigtail cable. The EN3 end of the cable connects directly to the MM-10XP input connector. The pigtail end of the cable can be equipped with either an EN3 5-pin male connector for connecting to the MPS-488HPe power supply, or a Phoenix 5-pin female connector for connecting to the MPS-488HPp power supply. The pigtail can also be spliced to a longer loudspeaker cable or to a junction box. The included EN3-to-pigtail cable uses a multiconductor cable, which can be wired for both DC power and balanced audio. The EN3-to-pigtail cable is available in plenum or regular (non-plenum) versions.

NOTE: For a complete list of cables and cable connectors available from Meyer Sound that can be used with the MM-10XP subwoofer and MPS-488HP power supply, see Appendix A, “MM-10 Accessories.”

CHAPTER 3: POWERING MM-10XP SUBWOOFERS WITH THE MPS-488HP

The MPS-488HP power supply delivers DC power and balanced audio to Meyer Sound loudspeakers that require a 48 V DC external power supply. The MPS-488HP is a multichannel, switched-mode, regulated power supply that occupies one space in a standard 19-inch rack. The MPS-488HP can power up to eight MM-10XP subwoofers.

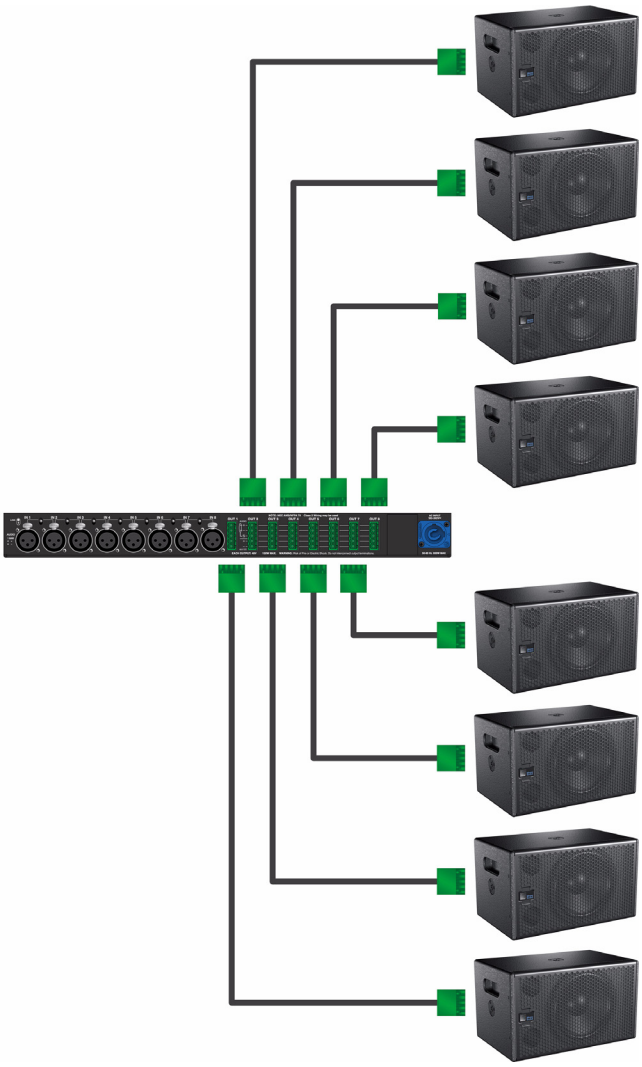

MPS-488HPp with Eight MM-10XPs

NOTE: The MPS-488HP power supply is available in two models: the MPS-488HPp, which is equipped with Phoenix 5-pin male output connectors, and the MPS-488HPe, which is equipped with EN3 5-pin female output connectors.

THE MPS-488HP FRONT PANEL

The MPS-488HP front panel includes a power switch and LEDs for monitoring each loudspeaker channel.

MPS-488HPp Power Supply Front Panel

AC Power

The MPS-488HP is powered on and off with the AC Power switch.

Voltage and Load Current LEDs (1–8)

The Voltage and Load Current LEDs are useful for verifying whether each channel output has voltage and whether the connected loudspeakers are receiving DC power and audio.

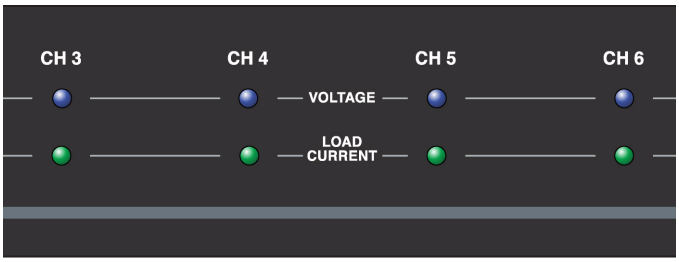

MPS-488HP Channel LEDs

Voltage LEDs (1–8)

The blue Voltage LEDs indicate whether voltage is present for each channel output. These LEDs should be lit when the MPS-488HP is powered on. The MPS-488HP's intelligent circuit protection shields connected loudspeakers from surges and shorts. The blue Voltage LEDs flash on and off when a surge or short is encountered. If a channel's Voltage LED flashes on and off, you should power down the MPS-488HP and inspect the cabling for that channel.

Load Current LEDs (1–8)

The green Load Current LEDs indicate whether a loudspeaker is connected to the channel and receiving power. As a channel's audio signal increases, its LED glows brighter. If an LED is not lit, check that the channel's Voltage LED is lit and verify the cable connection to the loudspeaker.

THE MPS-488HP REAR PANEL

The MPS-488HP rear panel includes an AC Input connector, eight Channel Inputs for receiving source audio, eight Channel Outputs for delivering DC power and balanced audio, and seven Link switches for routing audio from inputs to outputs.

MPS-488HPp Power Supply Rear Panel

MPS-488HPe Power Supply Rear Panel

AC Input

The MPS-488HP has a PowerCon twist-lock AC Input connector (line, neutral/line, earth). The connector can accept different power cord types for outlets used throughout the world. Make sure to use the correct power cord for the AC power in your area. The MPS-488HP operates at an AC voltage range of 100–240 V at 50–60 Hz.

Channel Inputs

Up to eight channels of balanced audio are received from the MPS-488HP's eight Channel Inputs. The inputs are equipped with XLR female connectors (pin 1, ground; pin 2, signal positive; pin 3, signal negative). Make sure to use standard balanced XLR cables with all three pins connected on both ends.

MPS-488HP Channel Inputs

Channel Inputs default to being routed to their corresponding Channel Outputs but can also be routed to adjacent outputs with the Link switches, though this affects their input impedance (see "Input Impedance for Linked Channel Inputs" on page 15).

Link Switches

Link switches determine how Channel Inputs are routed to Channel Outputs. When a Channel Input's Link switch is OFF (set to the down position), the input is only routed to its corresponding output: for example, Channel Input 1 routed to Channel Output 1. When a Link switch is ON (set to the up position), the input is routed to its corresponding output and the next adjacent output: for example, Channel Input 1 routed to Channel Output 1 and Channel Output 2. If multiple, adjacent Link switches are enabled, the input is routed to each adjacent output: for example, Channel Input 1 routed to Channel Outputs 1, 2, and 3.

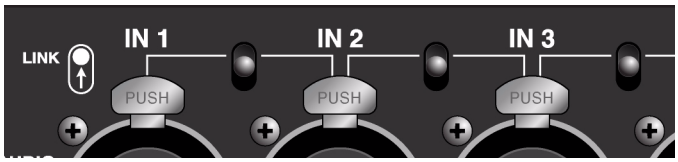

MPS-488HP Link Switches

NOTE: Channel Inputs are inactive when the Link switch for their preceding Channel Input is enabled. Connections should not be made to inactive Channel Inputs.

Routing Audio Inputs with the Link Switches

The following examples illustrate several common routing applications for the MPS-488HPp.

Routing One Input to Eight Outputs

To route one Channel Input to eight Channel Outputs:

- Set all Link switches to ON.

Link 1	Link 2	Link 3	Link 4	Link 5	Link 6	Link 7
On	On	On	On	On	On	On

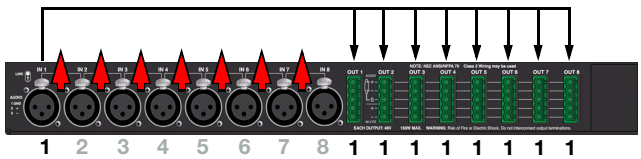

Routing Two Inputs to Four Outputs Each

To route two Channel Inputs to four Channel Outputs each:

1. Set the Link 4 switch to OFF and all other Link switches to ON.

Link 1	Link 2	Link 3	Link 4	Link 5	Link 6	Link 7
On	On	On	Off	On	On	On

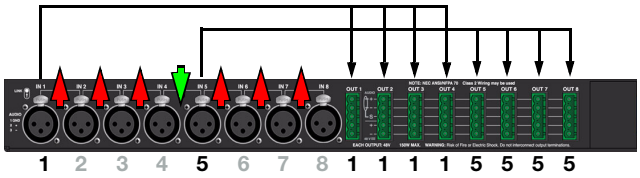

Routing Eight Inputs to Eight Separate Outputs

To route eight Channel Inputs to eight separate Channel Outputs:

- Set all Link switches to OFF.

Link 1	Link 2	Link 3	Link 4	Link 5	Link 6	Link 7
Off	Off	Off	Off	Off	Off	Off

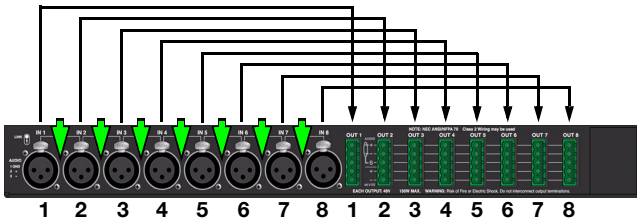

Input Impedance for Linked Channel Inputs

When a Link switch is enabled, the Channel Input's unbuffered source signal is transmitted in parallel to each linked Channel Output. This causes the Channel Input's impedance (normally 10 kOhms for one MM-10XP) to be reduced for each linked output. For example:

- 1 Channel Output, 10 kOhm input impedance
- 2 Channel Outputs, 5 kOhm input impedance
- 4 Channel Outputs, 2500 ohms input impedance
- 8 Channel Outputs, 1250 ohms input impedance

To avoid distortion when linking Channel Inputs, make sure the source device can drive the total load impedance of the linked MM-10XP subwoofers. The source device must be capable of delivering a minimum of 16 dBV (6.3 V rms into 600 ohms) to yield the maximum peak SPL over the operating bandwidth of the subwoofer.

NOTE: Most source devices are capable of driving loads no smaller than 10 times their output impedance. To drive eight MM-10XPs linked from a single Channel Input, the source device should have an output impedance of approximately 100 ohms or less.

Channel Outputs

The MPS-488HP's eight Channel Outputs deliver DC power (48 V DC) and balanced audio to up to eight MM-10XPs. The channel outputs can be equipped with either Phoenix 5-pin male connectors (on the MPS-488HPp model) or EN3 5-pin male connectors (on the MPS-488HPe model).

NOTE: For information on MM-10XP cable requirements, see "MM-10XP Current Draw and Cable Requirements" on page 11. For information on cables and cable accessories available from Meyer Sound, see Appendix A, "MM-10 Accessories." For information on cable assembly, see Appendix C, "Phoenix and EN3 Cable Assembly."

TIP: A single composite cable (such as Belden 1502) wired for both DC power and balanced audio can be used to connect MM-10XPs to Channel Outputs.

CAUTION: When wiring cable connections for the MPS-488HP channel outputs, it is extremely important that each pin in the connector is wired correctly. Make sure the 48 V DC from the MPS-488HP is wired directly (and only) to the 48 V DC pins on the MM-10XP connector, and that the polarity is observed (negative to negative, positive to positive) to avoid damage to the subwoofer. In addition, make sure the audio pins are wired correctly; polarity reversals for audio signals will affect system performance.

MPS-488HPp Channel Outputs

The MPS-488HPp Channel Outputs use Phoenix 5-pin male connectors with three pins for balanced audio (positive, negative, and shield) and two for DC Power (positive and negative). These pins are clearly labeled on the MPS-488HPp rear panel.

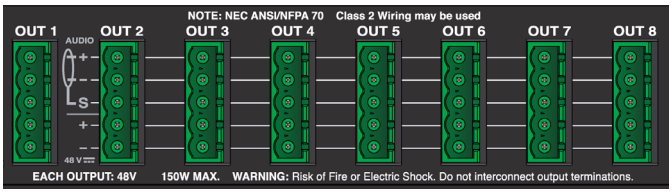

MPS-488HPp Channel Outputs

Each MPS-488HPp comes with eight Phoenix 5-pin female cable connectors for assembling loudspeaker cables.

MPS-488HPe Channel Outputs

The MPS-488HPe Channel Outputs use EN3 5-pin female connectors with three pins for balanced audio (positive, negative, and shield) and two for DC Power (positive and negative). These pins are clearly labeled on the MPS-488HPe rear panel.

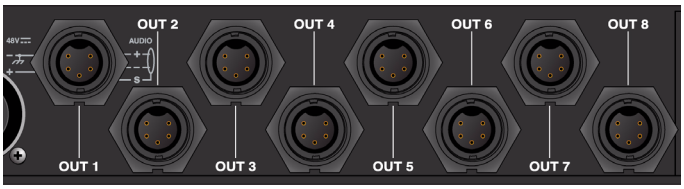

MPS-488HPe Channel Outputs

Each MPS-488HPe comes with eight EN3 5-pin male cable connectors for assembling loudspeaker cables.

MPS-488HP CURRENT DRAW

The current draw for the MPS-488HP and its connected loudspeakers is dynamic and fluctuates as operating levels change. Since different cables and circuit breakers heat up at varying rates, it is important to understand the following types of current ratings and how they affect circuit breaker and cable specifications.

- **Idle Current** — The maximum rms current during idle periods.
- **Maximum Long-Term Continuous Current** — The maximum rms current during a period of at least 10 seconds. The Maximum Long-Term Continuous Current is used to calculate temperature increases for cables, to ensure that cable sizes and gauges conform to electrical code standards. This current rating is also used as a rating for slow-reacting thermal breakers.
- **Burst Current** — The maximum rms current during a period of around one second. The Burst Current is used as a rating for magnetic breakers. It is also used for calculating the peak voltage drop in long AC cable runs according to the following formula:

  V pk (drop) = I pk x R (cable total)
- **Ultimate Short-Term Peak Current** — A rating for fast-reacting magnetic breakers.
- **Inrush Current** — The spike of initial current encountered when powering on.

You can use the following table as a guide for selecting cable gauges and circuit breaker ratings for the system's operating voltage.

Current Draw for MPS-488HP with Eight MM-10XPs

Current Draw (Eight MM-10XPs)	115 V AC	230 V AC	100 V AC
Idle Current	0.74 A rms	0.54 A rms	0.81 A rms
Maximum Long-Term Continuous Current	3.08 A rms	1.49 A rms	3.46 A rms
Burst Current	5.48 A rms	3.21 A rms	5.57 A rms
Ultimate Short-Term Peak Current	9.56 A peak	4.96 A peak	10.28 A peak
Inrush Current	20.0 A peak	20.0 A peak	20.0 A peak

The minimum electrical service amperage required by an MPS-488HP is the sum of the Maximum Long-Term Continuous Current for all MM-10XPs connected to the MPS-488HP. An additional 30 percent above the minimum amperage is recommended to prevent peak voltage drops at the service entry.

NOTE: For best performance, the AC cable voltage drop should not exceed 10 V, or 10 percent at 115 V and 5 percent at 230 V. Make sure that even with AC voltage drops that the AC voltage always remains within the operating window.

SAFETY ISSUES

Pay close attention to these important electrical and safety issues.

- The MPS-488HP requires a grounded outlet.

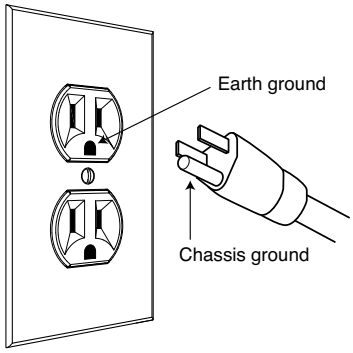

- Do not use a ground-lifting adapter or cut the AC cable ground pin.

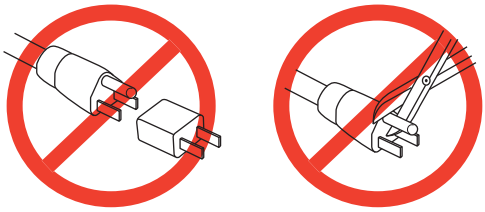

- Keep all liquids away from the MPS-488HP to avoid hazards from electrical shock.
- Do not operate the unit if the power cables are frayed or broken.

CONNECTING MM-10XP SUBWOOFERS TO THE MPS-488HP

To connect MM-10XP subwoofers to the MPS-488HP:

1. Power off the MPS-488HP.
2. Connect audio sources (from a mixer or processor) to the MPS-488HP Channel Inputs. Use balanced XLR cables.
3. Use the MPS-488HP Link switches to route Channel Inputs to the desired Channel Outputs (see “Link Switches” on page 14).
4. Connect the MM-10XP subwoofers to the MPS-488HP Channel Outputs. Use composite cables (such as Belden 1502) wired for both DC power and balanced audio and outfitted with the appropriate connectors.

- When connecting MM-10XP subwoofers equipped with Phoenix connectors to the MPS-488HPp power supply, use Phoenix 5-pin male to Phoenix 5-pin female cables.

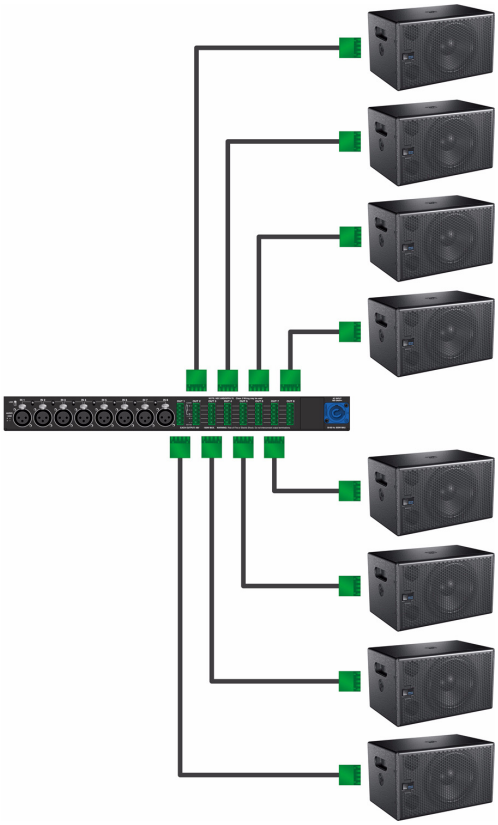

TIP: You can use two separate cables for MM-10XP subwoofer connections: a 2-conductor cable for DC power and a 3-conductor cable for balanced audio, both attached to a single Phoenix connector on each cable end. This allows you to use

a larger gauge for the DC cable so you can achieve longer cable runs (see “Cable Lengths and Cable Gauges for MM-10XPs” on page 11).

- When connecting MM-10XP subwoofers equipped with EN3 connectors to the MPS-488HPe power supply, use EN3 5-pin male to EN3 5-pin female cables.

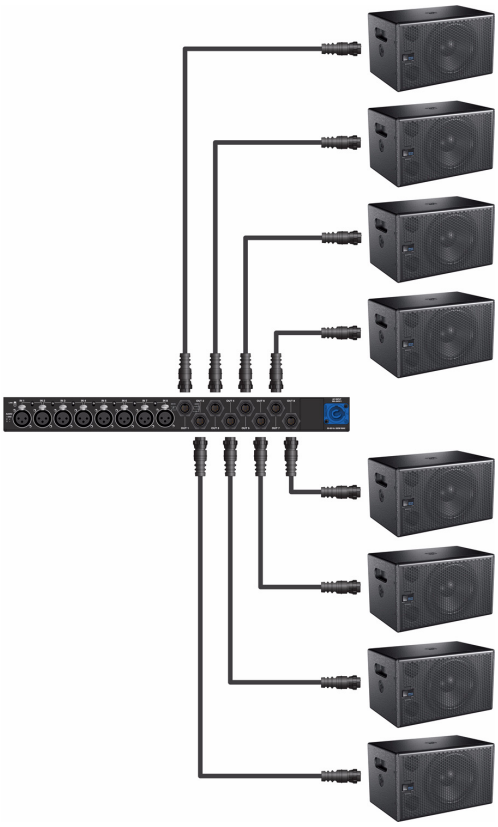

- To join two EN3 cables, one with an EN3 5-pin male cable mount connector to one with an EN3 5-pin female cable mount connector, use an EN3 5-pin female-to-male cable coupler (PN 28.163.033.01).

⚠ **CAUTION:** Make sure MM-10XP loudspeaker cables are wired correctly. For details on assembling loudspeaker cables, see Appendix C, “Phoenix and EN3 Cable Assembly.”

5. Power on the MPS-488HP and monitor the LEDs on its front panel to verify the connections (see “Voltage and Load Current LEDs (1–8)” on page 13).
6. Check the LEDs on the MM-10XP rear panels and verify they are green (ready to reproduce audio).
7. Enable output from the audio sources (from the mixer or processor) connected to the MPS-488HP.

POWERING MM-10XP SUBWOOFERS WITH THE ORIGINAL MPS-488

The original MPS-488 was designed for use with the MM-4XP miniature loudspeaker. While the MPS-488 can power up to eight MM-4XPs, it can only power up to four MM-10XPs (due to the MM-10XP’s higher power requirements and current draw).

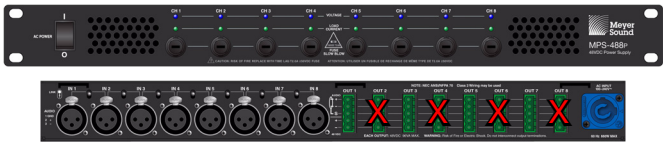

MPS-488P Power Supply

MPS-488E Power Supply

Because the MPS-488 can power a maximum of four MM-10XPs, the MM-10XPs should only be connected to channel outputs 1, 3, 5, and 7. Do not use the even-numbered channel outputs.

CHAPTER 4: THE MM-10AC SUBWOOFER

The MM-10AC subwoofer includes an internal power supply and locking AC PowerCon connectors. The MM-10AC receives audio from an XLR female Audio In connector, and also includes an XLR male Audio Loop Out connector for daisy-chaining audio signals.

MM-10AC Rear Panel

THE MM-10AC AC CONNECTORS

The MM-10AC subwoofer combines advanced loudspeaker technology with equally advanced power capabilities. Understanding voltage and current requirements, as well as electrical safety issues, is critical to the safe operation of the MM-10AC. The MM-10AC rear user panel includes the following PowerCon AC connectors:

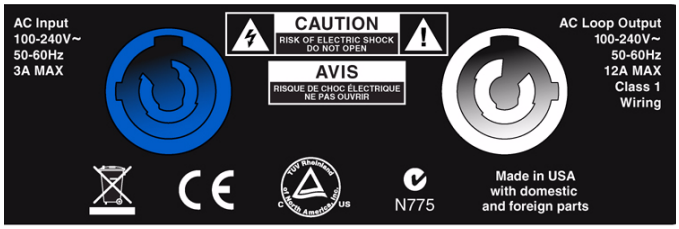

MM-10AC AC Input (Left) and AC Loop Output (Right) Connectors

AC Input Connector (Blue)

The blue AC Input connector supplies power to the MM-10AC. The input is rated at 20 amps and uses a PowerCon3 AC mains locking connector that prevents accidental disconnections. A 10-foot AC power cable, rated at 15 amps, is included with each MM-10AC. If you replace the included AC power cable, make sure to use a cable with the appropriate power plug (on the other end) for the region in which you will operate the unit.

The AC Input connector also supplies power to any additional subwoofers connected to the MM-10AC's gray AC Loop Output connector. Each MM-10AC requires approximately 0.9 A rms maximum at 115 V AC and 0.4 A rms maximum at 230 V AC.

CAUTION: When using the included AC power cable, do not loop more than 15 additional MM-10ACs from the AC Loop Output connector at 115 V (16 total for the circuit), and not more than 36 at 230 V (37 total for the circuit).

AC Loop Output Connector (Gray)

The gray AC Loop Output connector allows multiple MM-10AC subwoofers to be looped and powered from a single power source. Connect the AC Loop Output of the first MM-10AC to the AC Input of the second MM-10AC, and so forth. The AC Loop Output uses a PowerCon3 AC mains locking connector that prevents accidental disconnections.

The maximum number of subwoofers that can be looped from the AC Loop Output connector is determined by the voltage of the power source, the current draw of the looped subwoofers, the circuit breaker rating, and the rating of the AC power cable connected to the MM-10AC.

Table 4: Number of MM-10ACs that Can Be Looped

Circuit Breaker/ Connector Rating	115 V AC	230 V AC	100 V AC
15 amps	15 looped (16 total)	36 looped (37 total)	12 looped (13 total)

NOTE: The current draw for the MM-10AC is dynamic and fluctuates as operating levels change. The numbers in Table 4 assume that operating levels are normal and not such that the subwoofers are constantly limiting.

Each MM-10AC ships with one AC looping connector for making AC looping cables. Assembled AC looping cables are available from Meyer Sound.

⚠ **CAUTION:** Do not exceed the current capability of the 20-amp Input connector for the MM-10AC. When looping MM-10ACs, consider the total current draw for all units on the circuit, *including* the first.

POWER CONNECTOR WIRING

The MM-10AC requires a grounded outlet. To operate safely and effectively, it is extremely important that the entire system be properly grounded.

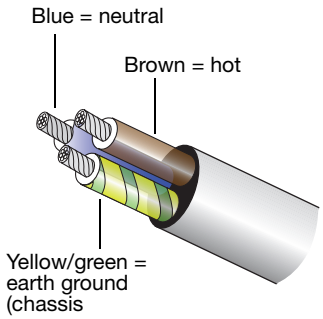

AC Cable Wiring Scheme

When wiring international or special-purpose power connectors:

- Connect the blue wire to the black terminal, or the terminal marked with an N.
- Connect the brown wire to the red terminal, or the terminal marked with an L.
- Connect the yellow and green wire to the green (or green and yellow) terminal, or the terminal marked with an E.

⚠ **CAUTION:** When creating AC power cables, it is important to preserve AC line polarity and connect the earth ground on both ends of the cable. The MM-10AC requires a grounded connection. Always use a grounded outlet and plug. It is extremely important that the system be properly grounded to operate safely and properly. Do not ground-lift the AC cable.

MM-10AC VOLTAGE REQUIREMENTS

The MM-10AC operates safely and continuously when the AC voltage stays within 100–240 V AC at 50 or 60 Hz. The subwoofer allows any combination of voltage to GND (neutral-line-ground or line-line-ground).

If the voltage drops below 90 V (brownout), the MM-10AC uses stored power to continue operating temporarily; the subwoofer will shut down if the voltage does not rise above the low boundary before the stored power is used.

If the voltage rises above 264 V, the power supply could become damaged.

⚠ **CAUTION:** The power source for the MM-10AC should always operate within the required voltage range, at least a few volts from the upper and lower ranges. This will ensure that AC voltage variations from the service entry — or peak voltage drops due to cable runs — will not cause the subwoofer's amplifiers to cycle on and off or cause damage to the power supply.

MM-10AC CURRENT DRAW REQUIREMENTS

The current draw for the MM-10AC is dynamic and fluctuates as operating levels change. Since different cables and circuit breakers heat up at varying rates, it is important to understand the following types of current ratings and how they affect circuit breaker and cable specifications.

- **Idle Current** — The maximum rms current during idle periods.
- **Maximum Long-Term Continuous Current** — The maximum rms current during a period of at least 10 seconds. The Maximum Long-Term Continuous Current is used to calculate temperature increases for cables, to ensure that cable sizes and gauges conform to electrical code standards. The current rating is also used as a rating for slow-reacting thermal breakers.
- **Burst Current** — The maximum rms current during a period of around one second. The Burst Current is used as a rating for magnetic breakers. It is also used for calculating the peak voltage drop in long AC cable runs according to the following formula:

  V pk (drop) = I pk x R (cable total)

  The Burst Current can also be used to calculate the AC looping capability of the MM-10AC.

- **Ultimate Short-Term Peak Current** — A rating for fast-reacting magnetic breakers.
- **Inrush Current** — The spike of initial current encountered when powering on.

You can use the following table as a guide for selecting cable gauges and circuit breaker ratings for the system's operating voltage.

MM-10AC Current Draw

Current Draw	115 V AC	230 V AC	100 V AC
Idle Current	0.13 A rms	0.13 A rms	0.14 A rms
Maximum Long-Term Continuous Current	0.40 A rms	0.25 A rms	0.46 A rms
Burst Current	0.9 A rms	0.4 A rms	1.1 A rms
Ultimate Short-Term Peak Current	2.0 A peak	1.4 A peak	2.3 A peak
Inrush Current	4.0 A peak	2.4 A peak	4.0 A peak

The minimum electrical service amperage required by an MM-10AC subwoofer system is the sum of the Maximum Long-Term Continuous Current for each unit. An additional 30 percent above the minimum amperage is recommended to prevent peak voltage drops at the service entry.

NOTE: For the best performance, the AC cable voltage drop should not exceed 10 V, or 10 percent at 115 V and 5 percent at 230 V. Make sure that even with AC voltage drops that the AC voltage always remains within the operating window.

ELECTRICAL SAFETY ISSUES

Pay close attention to these important electrical and safety issues.

- The MM-10AC requires a grounded outlet. Always use a grounded outlet and plug.

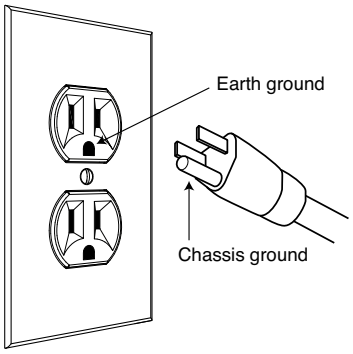

- Do not use a ground-lifting adapter or cut the AC cable ground pin.

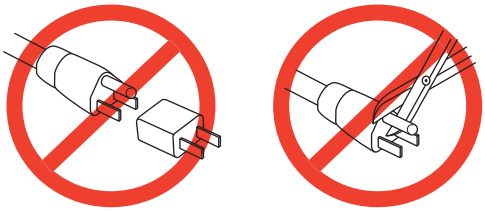

- Do not exceed the current capability of the 20-amp AC Input connector for the MM-10AC. When looping MM-10ACs, consider the total current draw for all units on the circuit, including the first.
- Make sure the AC power cable for the MM-10AC has the appropriate power plug (on the other end) for the area in which you will operate the unit. In addition, the AC power cable must be rated for the total current draw of all MM-10ACs looped from the power source.
- Do not operate the unit if the power cable is frayed or broken.
- Keep all liquids away from the MM-10AC to avoid hazards from electrical shock.

THE MM-10AC AUDIO CONNECTORS

The MM-10AC includes an XLR female Audio In connector and XLR male Audio Loop Out connector.

MM-10AC Audio In and Audio Loop Out Connectors

Audio In Connector

The XLR female Audio In connector accepts balanced audio signals with an input impedance of 10 kOhm. The connector uses the following wiring:

- **Pin 1** — 220 kOhm to chassis and earth ground (ESD clamped)
- **Pin 2** — Signal (+)

- **Pin 3** — Signal (–)
- **Case** — Earth (AC) ground and chassis

Pins 2 and 3 carry the input as a differential signal. Pin 1 is connected to earth through a 220 kOhm, 1000 pF, 15 V clamped network. This circuitry provides virtual ground lift for audio frequencies while allowing unwanted signals to bleed to ground. Make sure to use standard, balanced XLR audio cables with all three pins connected on both ends. Telescopic grounding is not recommended, and shorting an input connector pin to the case may cause a ground loop, resulting in hum.

TIP: If unwanted noise or hiss is produced by the subwoofer, disconnect its input cable. If the noise stops, there is most likely nothing wrong with the subwoofer. To locate the source of the noise, check the audio cable, source audio, and AC power.

Audio Loop Out Connector

The XLR male Audio Loop Out connector allows multiple MM-10AC subwoofers to be looped from a single audio source. For applications that require multiple MM-10ACs, connect the Audio Loop Out of the first unit to the Audio In of the second, and so forth.

NOTE: The order in which subwoofers are connected when looping audio signals is unimportant. The Audio Loop Out connector is wired in parallel to the Audio In connector and transmits the unbuffered source signal even when the MM-10AC is powered off.

To avoid distortion when looping multiple MM-10ACs, make sure the source device can drive the total load impedance of the looped subwoofers. In addition, the source device must be capable of delivering approximately 20 dBV (10 V rms into 600 ohms) to yield the maximum peak SPL over the entire operating bandwidth of the subwoofers. Most professional audio equipment can transmit these source levels.

To calculate the load impedance for the looped subwoofers, divide 10 kOhms (the input impedance for a single MM-10AC) by the number of looped subwoofers. For example, the load impedance for 10 MM-10AC subwoofers is 1000 ohms (10 kOhms / 10). To drive this number of looped subwoofers, the source device should have an output impedance of 100 ohms or less. This same rule applies when looping MM-10AC subwoofers with other self-powered Meyer Sound loudspeakers.

NOTE: Most source devices are capable of driving loads no smaller than 10 times their output impedance.

CAUTION: Make sure that all cabling for looped subwoofers is wired correctly (Pin 1 to Pin 1, Pin 2 to Pin 2, and so forth) to prevent the polarity from being reversed. If one or more subwoofers in a system have reversed polarity, frequency response and coverage will be significantly degraded.

THE MM-10AC INPUT POLARITY SWITCH

The Input Polarity switch swaps the polarity of the audio source signal, which is sometimes necessary to acoustically align the subwoofer with other loudspeakers in the system. When the switch is in the up (+), *non-inverting* position, pin 2 is hot relative to pin 3, resulting in a positive pressure wave when a positive signal is applied to pin 2. When the switch is in the down (–), *inverting* position, pin 3 is hot relative to pin 2, resulting in a positive pressure wave when a positive signal is applied to pin 3.

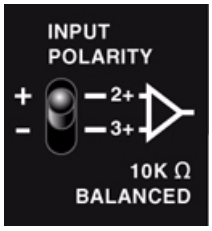

MM-10AC Input Polarity Switch

NOTE: The Input Polarity switch only affects the subwoofer signal. It has no effect on the Audio Loop Out signal.

THE MM-10AC LIMIT LED

The MM-10AC has a three-color Limit LED on its rear panel that changes color to indicate the subwoofer's status.

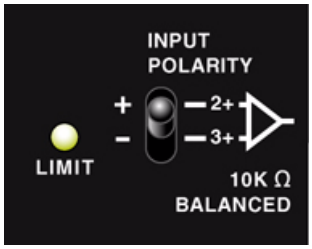

MM-10AC Limit LED

Powering On (Green)

When powering up the MM-10AC subwoofer, the following startup events occur and are indicated by the Limit LED:

1. The LED flashes green and then yellow during power up.
2. The LED turns solid green indicating the subwoofer is ready to reproduce audio.

CAUTION: If the Limit LED turns red and stays solid red after powering up and the audio is muted, the subwoofer has encountered a failure and may need to be serviced. Contact Meyer Sound Technical Support.

CAUTION: If the Limit LED turns solid red and the MM-10AC continues to output audio, though at reduced levels, the subwoofer's voltage may have dropped below 90 V AC. When these conditions are encountered, operation of the subwoofer should cease and its power supply and cabling should be verified.

Limiting (Yellow)

Limiting activity is indicated when the Limit LED turns yellow. When engaged, the limiter protects the subwoofer's driver and prevents signal peaks from causing excessive distortion in the subwoofer's amplifier, thereby preserving headroom and maintaining smooth frequency responses at high levels. When the level returns to normal, below the limiter's threshold, the LED turns green and limiting ceases.

The MM-10AC performs within its acoustical specifications at normal temperatures when the Limit LED is green, or if the LED turns yellow for two seconds or less and then returns to green for at least one second. If the LED remains yellow for longer than three seconds, the subwoofer enters hard limiting where:

- Increases to the input level have no effect.
- Distortion increases due to clipping and nonlinear driver operation.
- The drivers are subjected to excessive heat and excursion, which will compromise their life span and may eventually lead to damage over time.

CAUTION: The Limit LED turns yellow when the subwoofer's signal rises 2 dB above the limiting threshold, and indicates a safe, optimum level has been exceeded. If the MM-10AC subwoofers in a system begin to limit before reaching the desired SPL, consider adding more subwoofers to the system to achieve the desired SPL without exposing the subwoofers to excessive levels and possible overheating.

MM-10AC Temperature and Limiting

The Limit LED turns solid yellow when its heat sink temperature reaches 65° C (145° F), indicating the unit is reaching its maximum heat dissipation and a reduction in SPL is recommended. While the MM-10AC will continue to operate while the LED is yellow, the limiter threshold is lowered to a safe level (causing the output level to be lowered by 6 dB) to prevent the subwoofer from overheating. When the temperature of the heat sink cools to 50°C (122°F), the LED changes from yellow to green and the limiter threshold returns to normal.

Clipping (Red)

The Limit LED flashes red when its input signal causes the amplifier to overload. If the LED flashes red continuously, the subwoofer is severely overloaded and a reduction in the input level is recommended.

CAUTION: If the Limit LED turns solid red and the subwoofer continues to output audio, though at reduced levels, the subwoofer's voltage may have dropped below 90 V AC. When these conditions are encountered, operation of the subwoofer should cease and its power supply and cabling should be verified.

CHAPTER 5: THE MM-10ACX SUBWOOFER

The MM-10ACX subwoofer includes onboard DC power and audio routing for driving satellite loudspeakers: up to two MM-4XPs, or a single UP-4XP (due to its higher power requirements and current draw). Three independent XLR female Audio In connectors are provided for the subwoofer and satellite loudspeakers. Satellite Out connectors are available as either Phoenix 5-pin male or EN3 5-pin female. The MM-10ACX also includes locking AC PowerCon connectors.

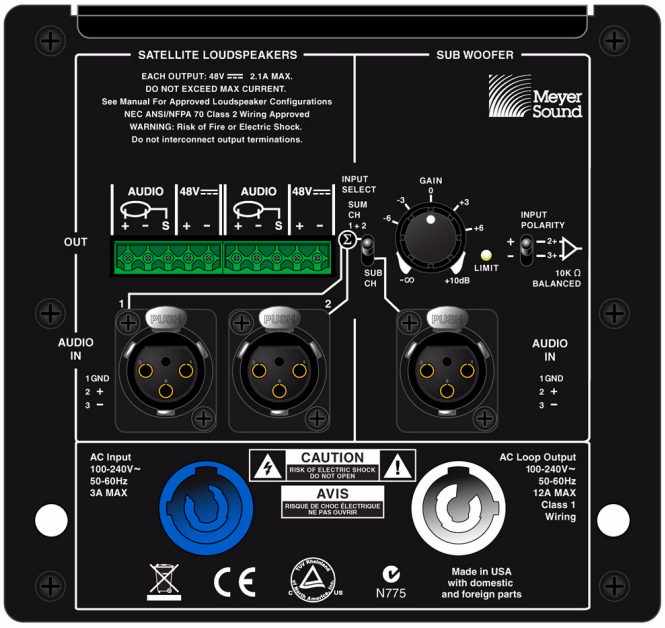

MM-10ACX Rear Panel, Shown with Phoenix Satellite Connectors

The MM-10ACX is extremely versatile. It can be used as a standalone subwoofer or it can be connected to and used with satellite loudspeakers in several different configurations. For more information, see “MM-10ACX Satellite Configurations” on page 32.

THE MM-10ACX AC CONNECTORS

The MM-10ACX subwoofer combines advanced loudspeaker technology with equally advanced power capabilities. Understanding voltage and current requirements, as well as electrical safety issues, is critical to the safe operation of the MM-10ACX. The MM-10ACX rear user panel includes the following PowerCon AC connectors:

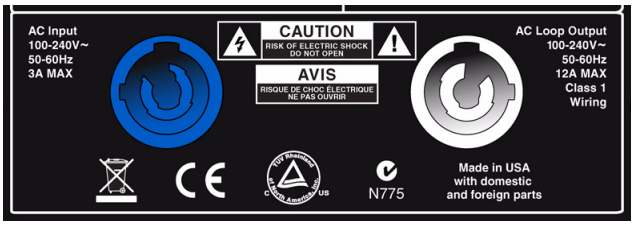

MM-10ACX AC Input (Left) and AC Loop Output (Right) Connectors

AC Input Connector (Blue)

The blue AC Input connector supplies power to the MM-10ACX. The input is rated at 20 amps and uses a PowerCon3 AC mains locking connector that prevents accidental disconnections. A 10-foot AC power cable, rated at 15 amps, is included with each MM-10ACX. If you replace the included AC power cable, make sure to use a cable with the appropriate power plug (on the other end) for the region in which you will operate the unit.

The AC Input connector also supplies power to any additional subwoofers connected to the MM-10ACX’s gray AC Loop Output connector, as well as any loudspeakers connected to the Satellite Out connectors. Each MM-10ACX requires approximately 3 A rms maximum at 115 V AC and 1.5 A rms maximum at 230 V AC.

> ⚠ **CAUTION:** When using the included AC power cable, do not loop more than five additional MM-10ACXs from the AC Loop Output connector at 115 V (six total for the circuit), and not more than 10 at 230 V (11 total for the circuit).

AC Loop Output Connector (Gray)

The gray AC Loop Output connector allows multiple MM-10ACX subwoofers to be looped and powered from a single power source. Connect the AC Loop Output of the first MM-10ACX to the AC Input of the second MM-10ACX, and so forth. The AC Loop Output uses a PowerCon3 AC mains locking connector that prevents accidental disconnections.

The maximum number of subwoofers that can be looped from the AC Loop Output connector is determined by the voltage of the power source, the current draw of the looped subwoofers and any connected satellite loudspeakers, the circuit breaker rating, and the rating of the AC power cable connected to the MM-10ACX.

Table 5: Number of MM-10ACXs that Can Be Looped (with Two MM-4XP Satellite Loudspeakers Attached to Each MM-10ACX)

Circuit Breaker/ Connector Rating	115 V AC	230 V AC	100 V AC
15 amps	5 looped (6 total)	10 looped (11 total)	4 looped (5 total)

NOTE: The current draw for the MM-10ACX is dynamic and fluctuates as operating levels change. The numbers in Table 5 assume that operating levels are normal and not such that the subwoofers and satellite loudspeakers are constantly limiting.

Each MM-10ACX ships with one AC looping connector for making AC looping cables. Assembled AC looping cables are available from Meyer Sound.

CAUTION: Do not exceed the current capability of the 20-amp Input connector for the MM-10ACX. When looping MM-10ACXs, consider the total current draw for all subwoofers and satellite loudspeakers on the circuit.

POWER CONNECTOR WIRING

The MM-10ACX requires a grounded outlet. To operate safely and effectively, it is extremely important that the entire system be properly grounded.

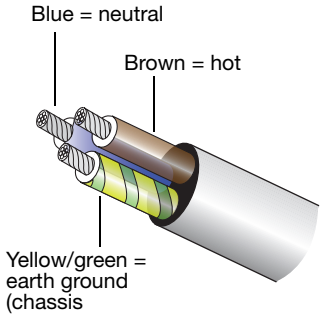

AC Cable Wiring Scheme

When wiring international or special-purpose power connectors:

- Connect the blue wire to the black terminal, or the terminal marked with an N.
- Connect the brown wire to the red terminal, or the terminal marked with an L.
- Connect the yellow and green wire to the green (or green and yellow) terminal, or the terminal marked with an E.

CAUTION: When creating AC power cables, it is important to preserve AC line polarity and connect the earth ground on both ends of the cable. The MM-10ACX requires a grounded connection. Always use a grounded outlet and plug. It is extremely important that the system be properly grounded to operate safely and properly. Do not ground-lift the AC cable.

MM-10ACX VOLTAGE REQUIREMENTS

The MM-10ACX operates safely and continuously when the AC voltage stays within 100–240 V AC at 50 or 60 Hz. The subwoofer allows any combination of voltage to GND (neutral-line-ground or line-line-ground).

If the voltage drops below 90 V (brownout), the MM-10ACX uses stored power to continue operating temporarily; the subwoofer will shut down if the voltage does not rise above the low boundary before the stored power is used.

If the voltage rises above 264 V, the power supply could become damaged.

CAUTION: The power source for the MM-10ACX should always operate within the required voltage range, at least a few volts from the upper and lower ranges. This will ensure that AC voltage variations from the service entry — or peak voltage drops due to cable runs — will not cause the subwoofer's amplifiers to cycle on and off or cause damage to the power supply.

MM-10ACX CURRENT DRAW REQUIREMENTS

The current draw for the MM-10ACX is dynamic and fluctuates as operating levels change. Since different cables and circuit breakers heat up at varying rates, it is important to understand the following types of current ratings and how they affect circuit breaker and cable specifications.

- **Idle Current** — The maximum rms current during idle periods.
- **Maximum Long-Term Continuous Current** — The maximum rms current during a period of at least 10 seconds. The Maximum Long-Term Continuous Current is used to calculate temperature increases for cables, to ensure that cable sizes and gauges conform to electrical code standards. The current rating is also used as a rating for slow-reacting thermal breakers. In addition, the Maximum Long-Term Continuous Current can be used to calculate the AC looping capability of the MM-10ACX.
- **Burst Current** — The maximum rms current during a period of around one second. The Burst Current is used as a rating for magnetic breakers. It is also used for calculating the peak voltage drop in long AC cable runs according to the following formula:

  V pk (drop) = I pk x R (cable total)

  The Burst Current can also be used to calculate the AC looping capability of the MM-10ACX.
- **Ultimate Short-Term Peak Current** — A rating for fast-reacting magnetic breakers.
- **Inrush Current** — The spike of initial current encountered when powering on.

You can use the following tables as a guide for selecting cable gauges and circuit breaker ratings for the system's operating voltage.

MM-10ACX Current Draw with No Satellite Loudspeakers

Current Draw	115 V AC	230 V AC	100 V AC
Idle Current	0.21 A rms	0.20 A rms	0.23 A rms
Maximum Long-Term Continuous Current	0.48 A rms	0.31 A rms	0.55 A rms
Burst Current	1.1 A rms	0.6 A rms	1.3 A rms
Ultimate Short-Term Peak Current	2.2 A peak	1.6 A peak	2.5 A peak
Inrush Current	6.6 A peak	3.7 A peak	7.2 A peak

MM-10ACX Current Draw with Two MM-4XP Satellite Loudspeakers Attached

Current Draw	115 V AC	230 V AC	100 V AC
Idle Current	0.32 A rms	0.26 A rms	0.36 A rms
Maximum Long-Term Continuous Current	0.90 A rms	0.51 A rms	1.02 A rms
Burst Current	2.5 A rms	1.3 A rms	3.0 A rms
Ultimate Short-Term Peak Current	4.5 A peak	2.8 A peak	5.0 A peak
Inrush Current	7.6 A peak	4.4 A peak	8.4 A peak

The minimum electrical service amperage required by an MM-10ACX subwoofer system is the sum of the Maximum Long-Term Continuous Current for each unit. An additional 30 percent above the minimum amperage is recommended to prevent peak voltage drops at the service entry.

NOTE: For the best performance, the AC cable voltage drop should not exceed 10 V, or 10 percent at 115 V and 5 percent at 230 V. Make sure that even with AC voltage drops that the AC voltage always remains within the operating window.

ELECTRICAL SAFETY ISSUES

Pay close attention to these important electrical and safety issues.

- The MM-10ACX requires a grounded outlet. Always use a grounded outlet and plug.

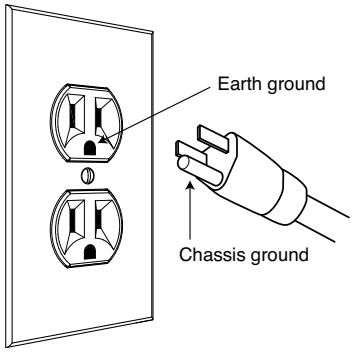

- Do not use a ground-lifting adapter or cut the AC cable ground pin.

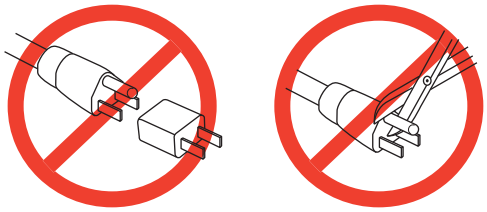

- Do not exceed the current capability of the 20-amp AC Input connector for the MM-10ACX. When looping MM-10ACXs, consider the total current draw for all units on the circuit, including the first.
- Make sure the AC power cable for the MM-10ACX has the appropriate power plug (on the other end) for the area in which you will operate the unit. In addition, the AC power cable must be rated for the total current draw of all MM-10ACXs looped from the power source.
- Do not operate the unit if the power cable is frayed or broken.
- Keep all liquids away from the MM-10ACX to avoid hazards from electrical shock.

THE MM-10ACX AUDIO IN CONNECTORS

The MM-10ACX includes three XLR female Audio In connectors for Satellite 1, Satellite 2, and Subwoofer.

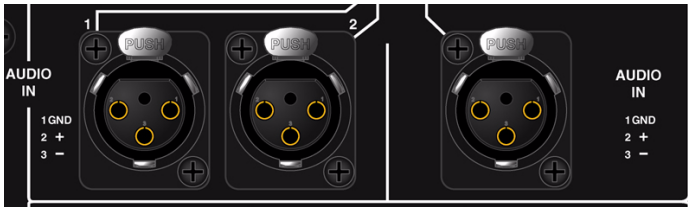

MM-10ACX Audio In Connectors: Satellite 1, Satellite 2, and Subwoofer

The XLR female Audio In connectors accept balanced audio signals with an input impedance of 10 kOhm. The connectors use the following wiring:

- **Pin 1** — 220 kOhm to chassis and earth ground (ESD clamped)
- **Pin 2** — Signal (+)
- **Pin 3** — Signal (–)
- **Case** — Earth (AC) ground and chassis

Pins 2 and 3 carry the input as a differential signal. Pin 1 is connected to earth through a 220 kOhm, 1000 pF, 15 V clamped network. This circuitry provides virtual ground lift for audio frequencies while allowing unwanted signals to bleed to ground. Make sure to use standard, balanced XLR audio cables with all three pins connected on both ends. Telescopic grounding is not recommended, and shorting an input connector pin to the case may cause a ground loop, resulting in hum.

TIP: If unwanted noise or hiss is produced by the subwoofer, disconnect its input cable. If the noise stops, there is most likely nothing wrong with the subwoofer. To locate the source of the noise, check the audio cable, source audio, and AC power.

THE MM-10ACX SATELLITE OUT CONNECTORS

The Satellite Out connectors deliver DC power (48 V DC) and balanced audio to satellite loudspeakers: up to two MM-4XPs, or a single UP-4XP (due to its higher power requirements and current draw). The source audio for the satellite loudspeakers is received from the MM-10ACX's Audio 1 In and Audio 2 In connectors. The DC power for the satellite loudspeakers is generated by the MM-10ACX's onboard DC power capabilities.

The Satellite Outs can be equipped with either Phoenix 5-pin male connectors or EN3 5-pin female connectors.

> ⚠ **CAUTION:** When wiring cable connections for the Satellite Outs, it is extremely important that each pin in the connector is wired correctly. Make sure the 48 V DC from the MM-10ACX is wired directly (and only) to the 48 V DC pins on the connector for the satellite loudspeaker, and that the polarity is observed (negative to negative, positive to positive) to avoid damage to the loudspeaker. In addition, make sure the audio pins are wired correctly; polarity reversals for audio signals can affect system performance.

Phoenix Outputs

The MM-10ACX Satellite Outs are available as Phoenix 5-pin male connectors with three pins for balanced audio (positive, negative, and shield) and two pins for DC Power (positive and negative). These pins are clearly labeled on the MM-10ACX rear panel. A single composite cable (such as Belden 1502) wired for both DC power and balanced audio can be used to connect to each satellite loudspeaker.

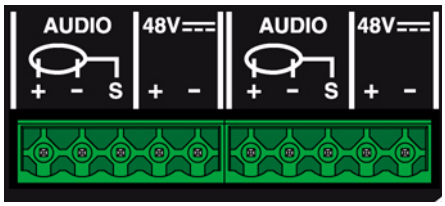

MM-10ACX Satellite Outs, Phoenix

When equipped with Phoenix Satellite Outs, the MM-10ACX comes with Phoenix 5-pin female cable connectors for assembling loudspeaker cables. For information on cable requirements for the satellite loudspeaker, refer to its operating instructions. For information on cables and cable accessories available from Meyer Sound, see Appendix A, "MM-10 Accessories." For information on cable assembly, see Appendix C, "Phoenix and EN3 Cable Assembly."

EN3 Outputs

The MM-10ACX Satellite Outs are available as EN3 5-pin female connectors with three pins for balanced audio (positive, negative, and shield) and two pins for DC Power (positive and negative). These pins are clearly labeled on the MM-10ACX rear panel. A single composite cable (such as Belden 1502) wired for both DC power and balanced audio can be used to connect to each satellite loudspeaker.

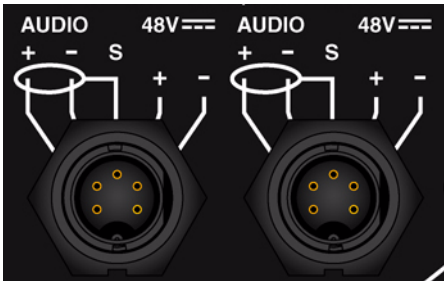

MM-10ACX Satellite Outs, EN3

When equipped with EN3 Satellite Outs, the MM-10ACX comes with EN3 5-pin male cable connectors for assembling loudspeaker cables. For information on cable requirements for the satellite loudspeaker, refer to its operating instructions. For information on cables and cable accessories available from Meyer Sound, see Appendix A, "MM-10 Accessories." For information on cable assembly, see Appendix C, "Phoenix and EN3 Cable Assembly."

THE MM-10ACX INPUT SELECT SWITCH

The Input Select switch determines the audio source signal for the subwoofer. When the switch is in the down position (SUB CH), the source signal is received from the Subwoofer Audio In connector. When the switch is in the up position (SUM CH 1 + 2), the source signal is received from the Satellite 1 and Satellite 2 Audio In connectors and is summed.

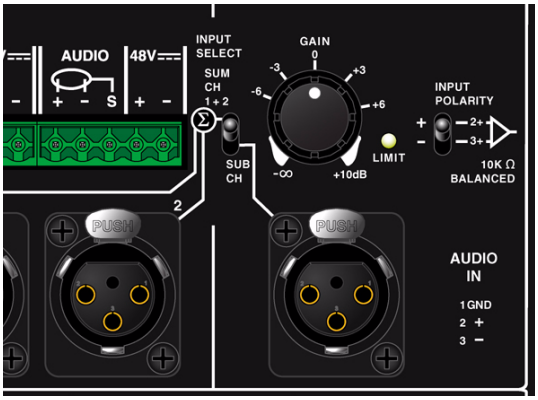

MM-10ACX Input Select Switch

NOTE: The Input Select switch is only included on the MM-10ACX model. The switch only affects the subwoofer signal and has *no* effect on the Satellite Outs.

The Input Select Switch and Summing

When the Input Select switch is in the up position (SUM CH 1 + 2), the source signal that is routed to the subwoofer from the Satellite Audio Ins is attenuated.

- If audio signals are present at both Satellite Audio Ins, the signal is summed and attenuated by 6 dB, resulting in a net gain of 0 dB.
- If only a single audio signal is present at one of the Satellite Audio Ins, the signal is also attenuated by 6 dB. But this time the result is a net gain of -6 dB.

THE MM-10ACX GAIN KNOB

The Gain knob adjust the subwoofer signal from completely attenuated to +10 dB and can be used to the balanced the subwoofer output with that of the satellite loudspeakers. The Gain knob is always active, regardless of the Input Select switch setting.

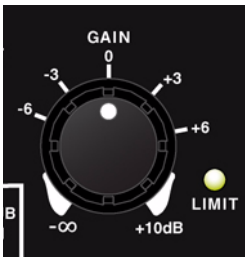

MM-10ACX Gain Knob

NOTE: The Gain knob is only included on the MM-10ACX model. The knob only affects the subwoofer signal and has *no* effect on the Satellite Outs.

THE MM-10ACX INPUT POLARITY SWITCH

The Input Polarity switch swaps the polarity of the audio source signal, which is sometimes necessary to acoustically align the subwoofer with other loudspeakers in the system. When the switch is in the up (+) position, pin 2 is hot relative to pin 3, resulting in a positive pressure wave when a positive signal is applied to pin 2. When the switch is in the down (–) position, pin 3 is hot relative to pin 2, resulting in a positive pressure wave when a positive signal is applied to pin 3.

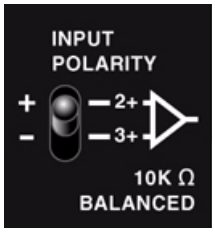

MM-10ACX Input Polarity Switch

NOTE: The Input Polarity switch only affects the subwoofer signal. It has no effect on the Satellite Outs.

THE MM-10ACX LIMIT LED

The MM-10ACX has a three-color Limit LED on its rear panel that changes color to indicate the subwoofer's status.

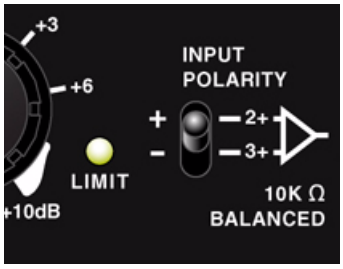

MM-10ACX Limit LED

Powering On (Green)

When powering up the MM-10ACX subwoofer, the following startup events occur and are indicated by the Limit LED:

1. The LED flashes green and then yellow during power up.
2. The LED turns solid green indicating the subwoofer is ready to reproduce audio.

⚠ **CAUTION:** If the Limit LED turns red and stays solid red after powering up and the audio is muted, the subwoofer has encountered a failure and may need to be serviced. Contact Meyer Sound Technical Support.

⚠ **CAUTION:** If the Limit LED turns solid red and the MM-10ACX continues to output audio, though at reduced levels, the subwoofer's voltage may have dropped below 90 V AC. When these conditions are encountered, operation of the subwoofer should cease and its power supply and cabling should be verified.

Limiting (Yellow)

Limiting activity is indicated when the Limit LED turns yellow. When engaged, the limiter protects the subwoofer's driver and prevents signal peaks from causing excessive distortion in the subwoofer's amplifier, thereby preserving headroom and maintaining smooth frequency responses at high levels. When the level returns to normal, below the limiter's threshold, the LED turns green and limiting ceases.

The MM-10ACX performs within its acoustical specifications at normal temperatures when the Limit LED is green, or if the LED turns yellow for two seconds or less and then returns to green for at least one second. If the LED remains yellow for longer than three seconds, the subwoofer enters hard limiting where:

- Increases to the input level have no effect.
- Distortion increases due to clipping and nonlinear driver operation.
- The drivers are subjected to excessive heat and excursion, which will compromise their life span and may eventually lead to damage over time.

⚠ **CAUTION:** The Limit LED turns yellow when the subwoofer's signal rises 2 dB above the limiting threshold, and indicates a safe, optimum level has been exceeded. If the MM-10ACX subwoofers in a system begin to limit before reaching the desired SPL, consider adding more subwoofers to the system to achieve the desired SPL without exposing the subwoofers to excessive levels and possible overheating.

MM-10ACX Temperature and Limiting

The Limit LED turns solid yellow when its heat sink temperature reaches 65° C (145° F), indicating the unit is reaching its maximum heat dissipation and a reduction in SPL is recommended. While the MM-10ACX will continue to operate while the LED is yellow, the limiter threshold is lowered to a safe level (causing the output level to be lowered by 6 dB) to prevent the subwoofer from overheating. When the temperature of the heat sink cools to 50°C (122°F), the LED changes from yellow to green and the limiter threshold returns to normal.

Clipping (Red)

The Limit LED flashes red when its input signal causes the amplifier to overload. If the LED flashes red continuously, the subwoofer is severely overloaded and a reduction in the input level is recommended.

⚠ **CAUTION:** If the Limit LED turns solid red and the subwoofer continues to output audio, though at reduced levels, the subwoofer's voltage may have dropped below 90 V AC. When these conditions are encountered, operation of the subwoofer should cease and its power supply and cabling should be verified.

MM-10ACX SATELLITE CONFIGURATIONS

Single Channel

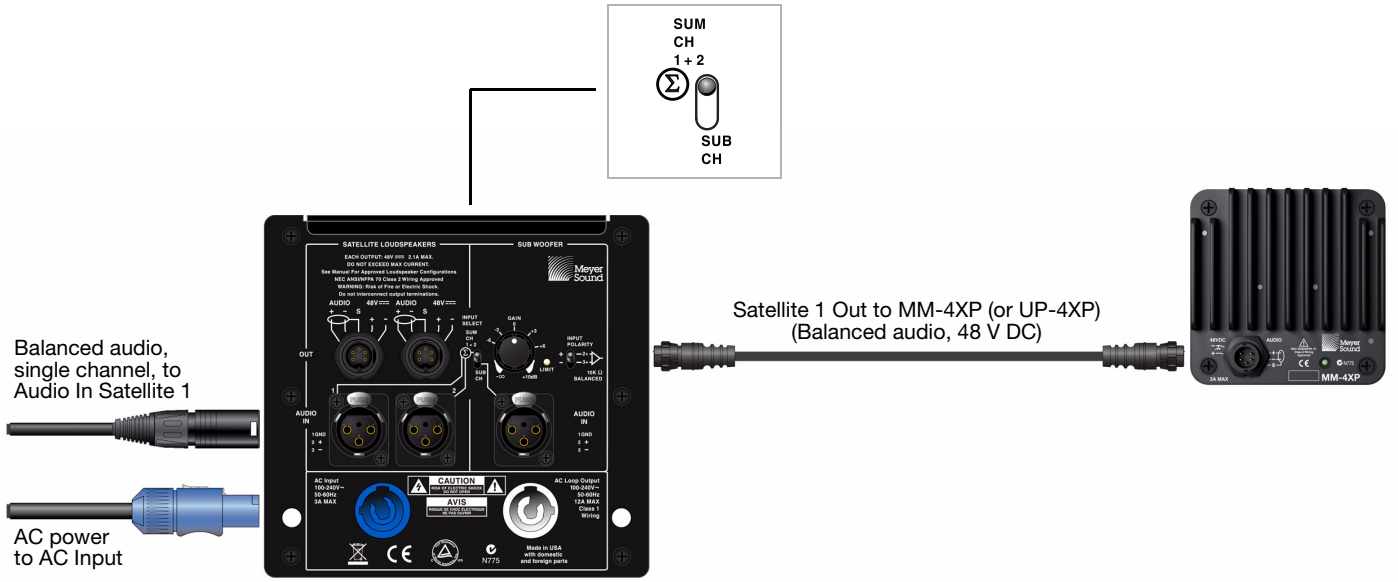

MM-10ACX Single-Channel Satellite System (Shown with EN3 Connectors)

To configure a single-channel satellite system with one MM-10ACX and either one MM-4XP or one UP-4XP:

1. Connect a single audio signal to Audio In for Satellite 1 on the MM-10ACX.
2. Connect Satellite 1 Out from the MM-10ACX to the loudspeaker input of the MM-4XP or UP-4XP.
3. Set the Input Select switch on the MM-10ACX to SUM CH 1+2 (up).
4. If necessary, to accommodate for the placement of the subwoofer and satellite loudspeaker, adjust the Input Polarity switch and Gain knob on the MM-10ACX.

NOTE: The MM-10ACX can power up to two MM-4XPs, or a single UP-4XP (due to its higher power requirements and current draw).

Dual Channel

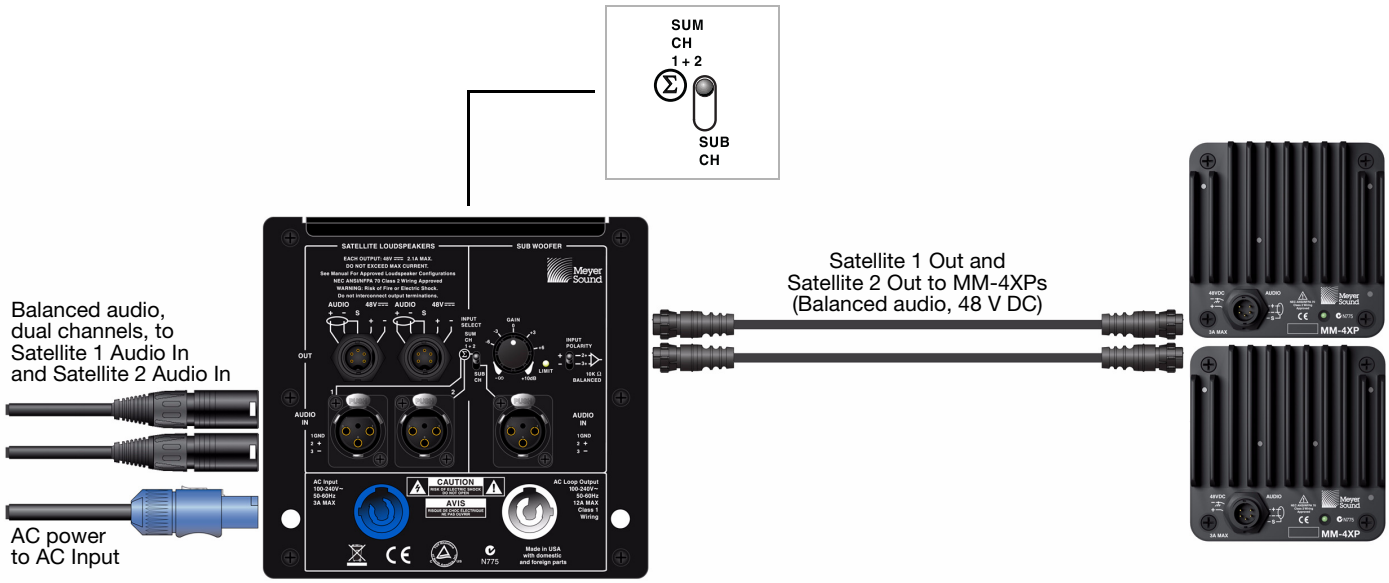

MM-10ACX Dual-Channel Satellite System (Shown with EN3 Connectors)

To configure a dual-channel satellite system with one MM-10ACX and two MM-4XPs:

1. Connect the left audio signal to Audio In for Satellite 1 on the MM-10ACX.
2. Connect the right audio signal to Audio In for Satellite 2 on the MM-10ACX.
3. Connect the Satellite 1 Out from the MM-10ACX to the loudspeaker input of left MM-4XP.
4. Connect the Satellite 2 Out from the MM-10ACX to the loudspeaker input of the right MM-4XP.
5. Set the Input Select switch on the MM-10ACX to SUM CH 1+2 (up).
6. If necessary, to accommodate for the placement of the subwoofer and satellite loudspeakers, adjust the Input Polarity switch and Gain knob on the MM-10ACX.

Dual Channel + Sub Channel (2.1)

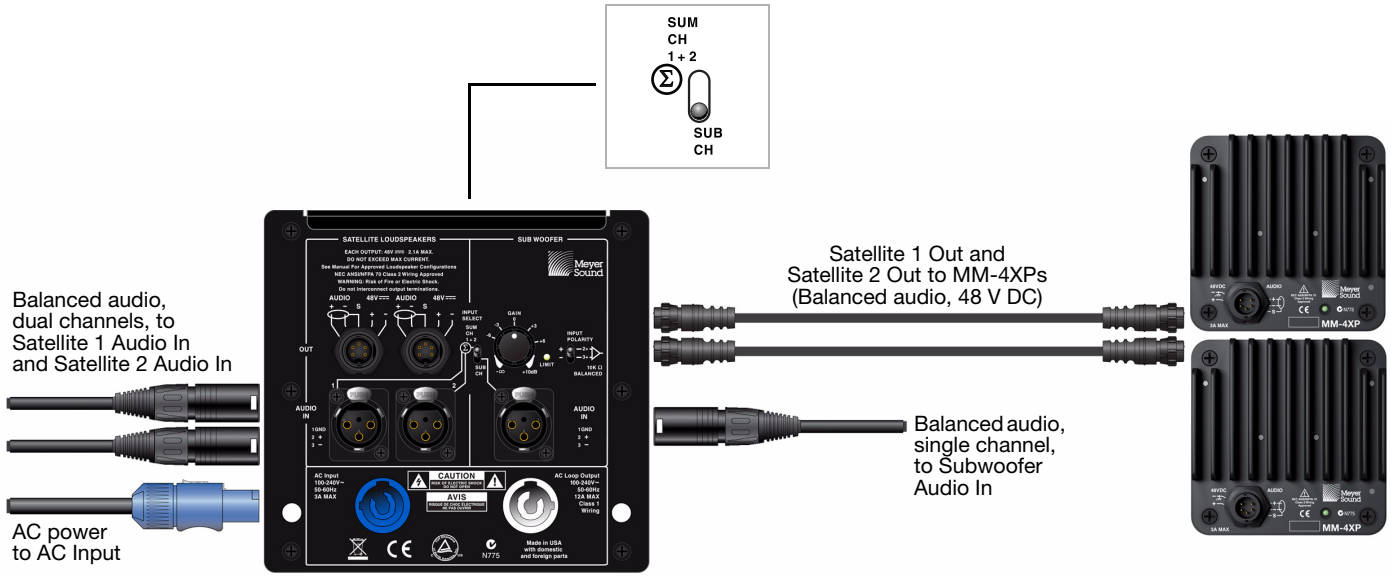

MM-10ACX Dual Channel + Sub Channel System (Shown with EN3 Connectors)

To configure a 2.1 satellite system with one MM-10ACX and two MM-4XPs:

1. Connect the left audio signal to Audio In for Satellite 1 on the MM-10ACX.
2. Connect the right audio signal to Audio In for Satellite 2 on the MM-10ACX.
3. Connect the subwoofer audio signal to the Subwoofer Audio In on the MM-10ACX.
4. Connect the Satellite Out 1 from the MM-10ACX to the loudspeaker input of left MM-4XP.
5. Connect the Satellite Out 2 from the MM-10ACX to the loudspeaker input of the right MM-4XP.
6. Set the Input Select switch on the MM-10ACX to SUB CH (down).
7. If necessary, to accommodate for the placement of the subwoofer and satellite loudspeakers, adjust the Input Polarity switch and Gain knob on the MM-10ACX.

CHAPTER 6: MOUNTING THE MM-10

The MM-10 is available with top and side nut plates with either 3/8"-16 or metric M10 threaded nuts. The optional MUB-MM10 u-bracket mounts the MM-10 on ceilings and walls at adjustable angles.

IMPORTANT SAFETY CONSIDERATIONS

When installing Meyer Sound loudspeakers, the following precautions should always be observed:

- All Meyer Sound products must be used in accordance with local, state, federal, and industry regulations. It is the owner's and user's responsibility to evaluate the reliability of any rigging or mounting method for their application. Rigging should only be carried out by experienced professionals.
- Use mounting and rigging hardware that has been rated to meet or exceed the weight being hung.
- Make sure to attach mounting hardware to the building's structural components (studs or joists), and not just to the wall surface. Verify that the building's structure and the anchors used for the installation will safely support the total weight of the mounted loudspeakers.
- Use mounting hardware appropriate for the surface where the loudspeaker will be installed.
- Make sure bolts are tightened securely. Meyer Sound recommends using Loctite® on bolt threads and safety cables.
- Inspect mounting and rigging hardware regularly. Immediately replace any worn or damaged components.

THE MUB-MM10 U-BRACKET

The MUB-MM10 U-bracket mounts the MM-10 on ceilings and walls at adjustable angles. The U-bracket's adjustment slot lets you adjust how close the MM-10 is located to the mounting surface and at what angle the subwoofer will be positioned. The MUB-MM10 is available in two kits with either 3/8"-16 hardware (PN 40.199.060.01) or M10 hardware (PN 40.199.060.02).

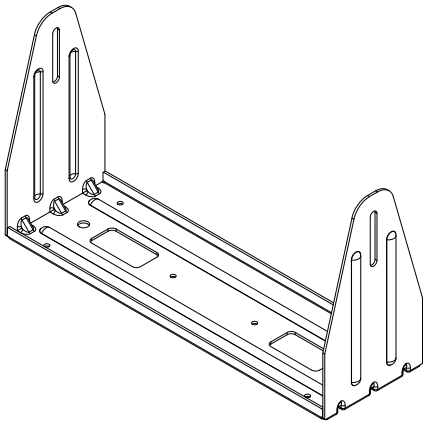

MUB-MM10 U-Bracket

Ceiling-Mounting with the MUB-MM10

The MM-10 can be mounted on a ceiling or underbalcony area with the MUB-MM10 U-bracket.

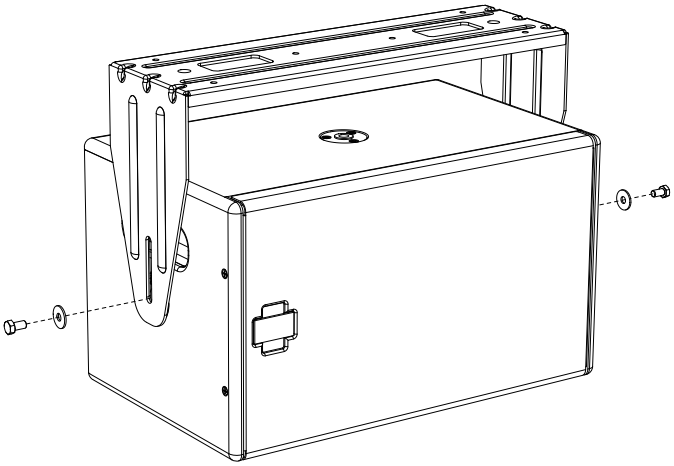

MUB-MM10, Ceiling-Mounted

Wall-Mounting with the MUB-MM10

The MUB-MM10 U-bracket lets you mount the MM-10 either vertically or horizontally on a wall.

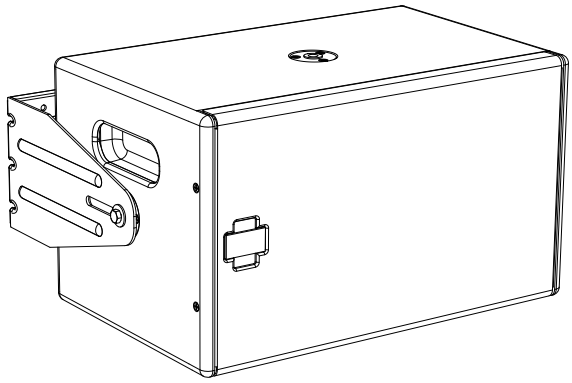

MUB-MM10, Horizontal Wall Mount

APPENDIX A: MM-10 ACCESSORIES

MM-10 ACCESSORIES

The following MM-10 accessories are available from Meyer Sound.

MM-10 Accessories

Part Number	Accessory	Notes
09.183.001.01	MPS-488HPp external power supply (with US power cord)	Channel Outputs equipped with Phoenix 5-pin male connectors; use with MM-10XPs equipped with Phoenix connectors
09.183.001.02	MPS-488HPp external power supply (with CE power cord)	
09.183.001.03	MPS-488HPe external power supply (with US power cord)	Channel Outputs equipped with EN3 5-pin female connectors; use with MM-10XPs equipped with EN3 connectors
09.183.001.04	MPS-488HPe external power supply (with CE power cord)	
40.199.060.01	MUB-MM10 U-bracket	With 3/8”-16 hardware.
40.199.060.02	MUB-MM10 U-bracket	With M10 hardware.
40.174.015.01	Horizontal rain hood kit	Included with weather-protected MM-10s. Only recommended for use with weather-protected MM-10s.
40.174.015.02	Vertical rain hood kit	

PHOENIX AND EN3 CABLE CONNECTORS AND ADAPTERS

The following Phoenix and EN3 cable connectors and adapters are available from Meyer Sound.

Phoenix and EN3 Cable Connectors and Adapters

Part Number	Connector/Adapter	Use
484.065	Phoenix 5-pin female cable mount connector	Connects to MM-10XPs equipped with Phoenix connectors, and MPS-488HPp Channel Outputs
468.069	EN3 5-pin female cable mount connector	Connects to MM-10XPs equipped with EN3 connectors
468.071	EN3 5-pin male cable mount connector	Connects to MPS-488HPe Channel Outputs
468.072	EN3 5-pin female inline cable adapter	Connects to EN3 5-pin male cable mount connectors
468.073	EN3 5-pin male inline cable adapter	Connects to EN3 5-pin female cable mount connectors
28.163.033.01	Cable coupler EN3 5-pin female-to-male	Joins two cables: one with an EN3 5-pin male cable mount connector to one with an EN3 5-pin female cable mount connector

PHOENIX AND EN3 LOUDSPEAKER CABLES

The following Phoenix and EN3 cables are available from Meyer Sound and can be used to connect MM-10XPs to MPS-488HPs, as well as to connect MM-10ACXs to satellite loudspeakers.

NOTE: Phoenix and EN3 loudspeaker cables and bulk cable use Belden 1502R (regular) or Belden 1502P (plenum) cable. Belden 1502 is a composite cable comprised of two 18 AWG wires for DC power, two 22 AWG wires for balanced audio, and one 24 AWG wire for audio shield.

Phoenix and EN3 Loudspeaker Cables

Part Number	Cable	Color	Coating	Length
524.014	Bulk (no connectors)	Black	Regular	500 ft spool
524.015	Bulk (no connectors)	White	Plenum	500 ft spool
28.163.009.01	EN3 5-pin female to pigtail	Black	Regular	10 ft
28.163.009.11	EN3 5-pin female to pigtail	White	Plenum	10 ft
28.163.009.21	EN3 5-pin female to EN3 5-pin male	Black	Regular	10 ft
28.163.009.22				20 ft
28.163.009.23				30 ft
28.163.009.24				50 ft
28.163.009.25				100 ft
28.163.009.26				150 ft
28.163.009.31	EN3 5-pin female to EN3 5-pin male	White	Plenum	10 ft
28.163.009.32				20 ft
28.163.009.33				30 ft
28.163.009.34				50 ft
28.163.009.35				100 ft
28.163.009.36				150 ft
28.163.033.01	Cable coupler EN3 5-pin female-to-male (joins two cables: one with an EN3 5-pin male cable mount connector to one with an EN3 5-pin female cable mount connector)			
28.163.009.41	EN3 5-pin female to Phoenix 5-pin female	Black	Regular	10 ft
28.163.009.42				20 ft
28.163.009.43				30 ft
28.163.009.44				50 ft
28.163.009.45				100 ft
28.163.009.46				150 ft
28.163.009.51	EN3 5-pin female to Phoenix 5-pin female	White	Plenum	10 ft
28.163.009.52				20 ft
28.163.009.53				30 ft
28.163.009.54				50 ft
28.163.009.55				100 ft
28.163.033.01				150 ft

APPENDIX B: OPTIONAL RAIN HOODS

A weather-protected version of the MM-10 subwoofer is available with rain hood kits that safeguard the subwoofer's electronics from the elements in fixed, outdoor installations. The rain hood is available in both horizontal (PN 40.174.015.01) and vertical (PN 40.174.015.02) versions. The rain hood is made of a durable, high-impact polycarbonate that is also transparent, allowing the subwoofer's connections and LEDs to be visible.

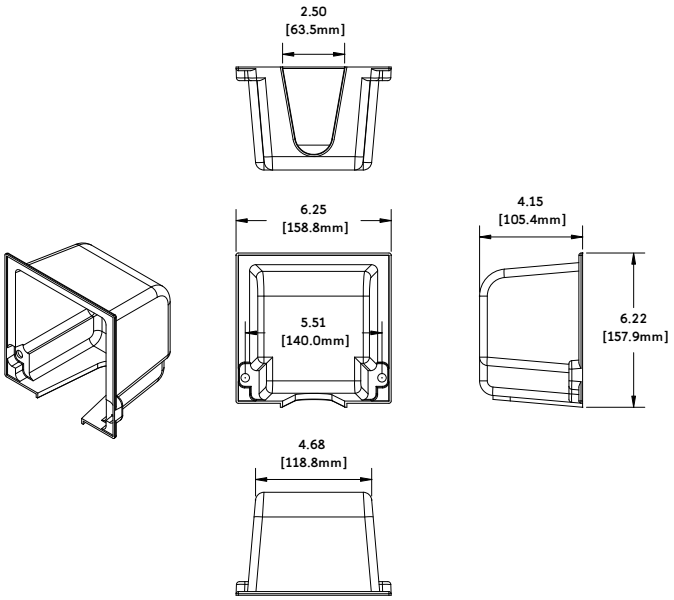

MM-10 Horizontal Rain Hood Dimensions

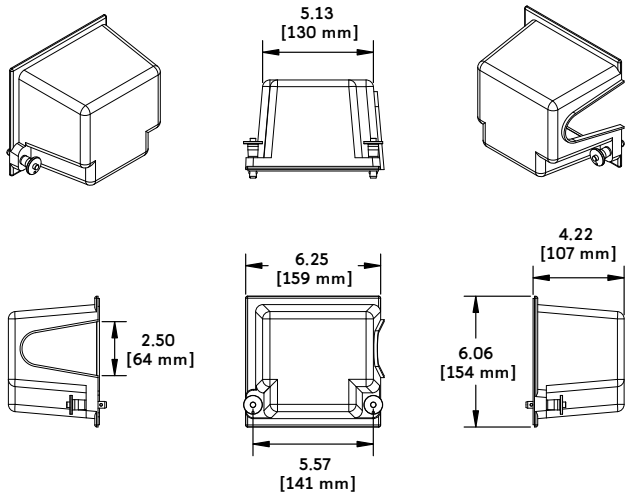

MM-10 Vertical Rain Hood Dimensions

INSTALLING THE HORIZONTAL RAIN HOOD

To install the MM-10 horizontal rain hood:

1. Orient the MM-10 horizontally with its user panel to the left.
1. Attach any required cables to the subwoofer.
2. If the rain hood's gasket material is not attached, firmly attach it to the rain hood's inner edges. Do not attach the gasket directly to the user panel.
3. Attach the rain hood by slipping it under the flange at the top of the loudspeaker, placing it flush against the user panel. Align the rain hood's holes with those in the panel.

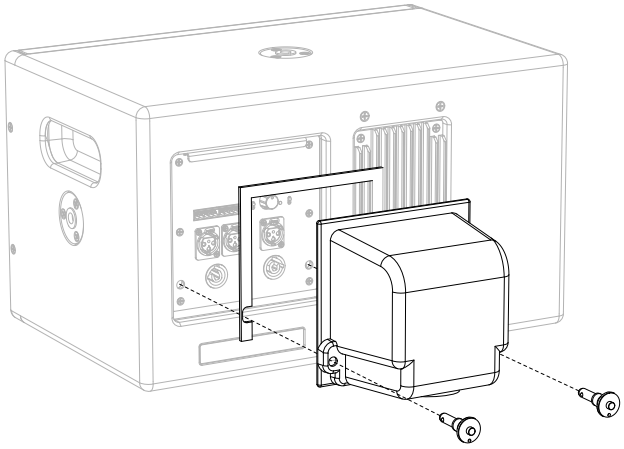

4. Secure the rain hood to the user panel by inserting the lock pins in the two bottom holes. Insert the pins all the way so they lock.

INSTALLING THE VERTICAL RAIN HOOD

To install the MM-10 vertical rain hood:

1. Orient the MM-10 vertically with its user panel at the top.
2. Attach any required cables to the subwoofer.
3. If the rain hood's gasket material is not attached, firmly attach it to the rain hood's inner edges. Do not attach the gasket directly to the user panel.

4. Attach the rain hood by slipping it under the flange on the right side of the subwoofer, placing it flush against the user panel. Align the rain hood's holes with those in the panel.

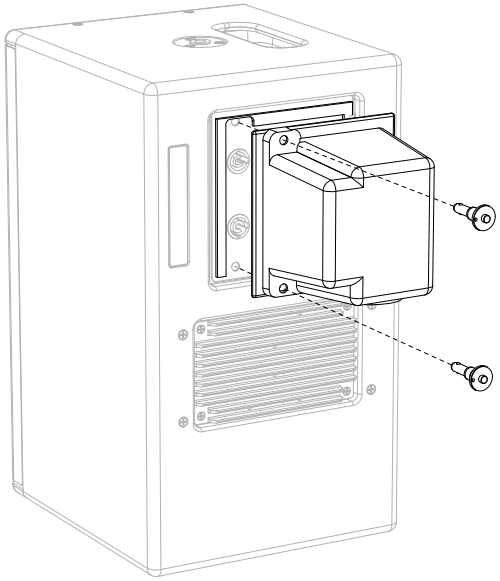

5. Secure the rain hood to the user panel by inserting the lock pins in the two left holes. Insert the pins all the way so they lock.

Tilt for Vertically-Oriented, Weather-Protected MM-10s

When installing vertically-oriented, weather-protected MM-10s, the units must be mounted at a 0-degree, or downward, tilt. This ensures that water will not accumulate in the front of loudspeaker.

APPENDIX C: PHOENIX AND EN3 CABLE ASSEMBLY

ASSEMBLING EN3-TO-EN3 LOUDSPEAKER CABLES

When connecting MM-10XP loudspeakers equipped with EN3 connectors to the MPS-488HPe power supply, you need an EN3 5-pin female to EN3 5-pin male cable. The following procedure documents how to assemble this cable. If you are starting with an EN3-to-pigtail cable (included with the MM-10XP), you can skip step 5 in this procedure.

NOTE: Cable mount connectors cannot connect to other cable mount connectors. Cable mount connectors can only connect to panel mount connectors (like those on the MM-10XP and MPS-488HPe) or inline connectors. To extend cables with EN3 connectors on both ends you can use an EN3 5-pin female-to-male cable coupler.

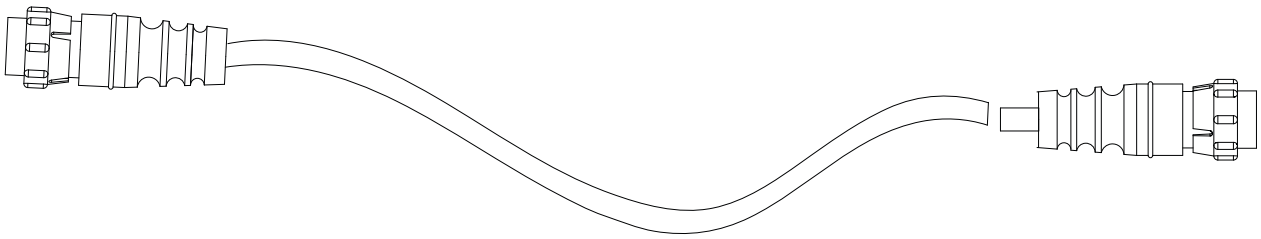

Assembled EN3-to-EN3 Cable

To assemble an EN3-to-EN3 loudspeaker cable:

1. Disassemble the EN3 5-pin male connector and feed one end of the cable through the boot, cable clamp housing, and coupling ring.

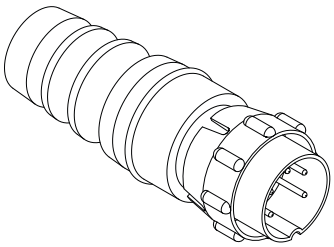

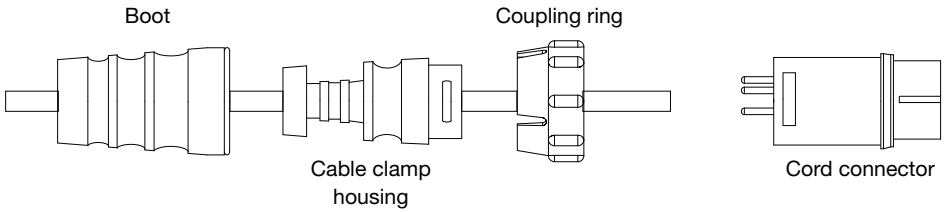

Disassembled EN3 5-Pin Male Cable Mount Connector

2. If the cable has not been stripped, strip the outer shielding 1” and then strip the black, red, blue, and white wires .275”.

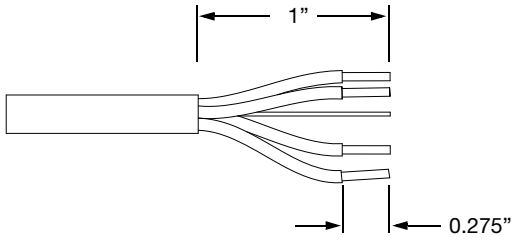

3. Solder the five exposed conductors to the five pins on the EN3 cord connector using the following wiring scheme.

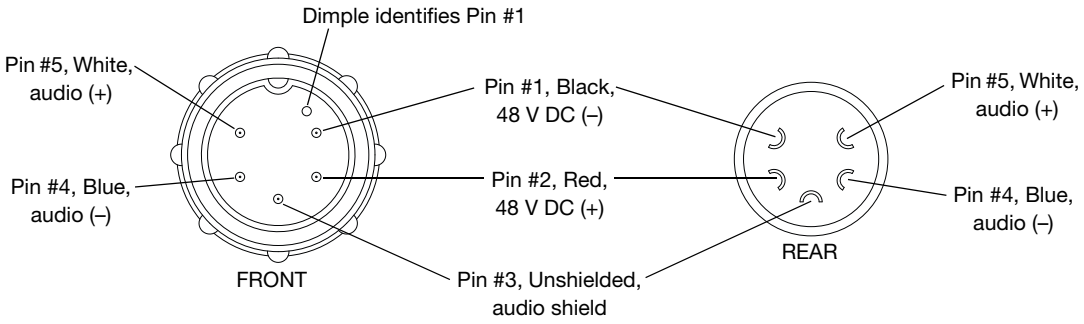

Pin Destinations for EN3 5-Pin Male Cable Mount Connector

4. Reassemble the EN3 5-pin male connector:

- Align the coupling ring’s side notches with the cord connector’s side notches and slide the couple ring onto the cord connector.
- Carefully insert the end of the cable clamp housing into the cord connector until it locks into place. Snap the cable clamps in the cable clamp housing into their compartments.
- Slide the boot forward so it covers the cable clamp housing completely.

5. Repeat the previous steps to attach the EN3 5-pin female connector to the other end of the cable.

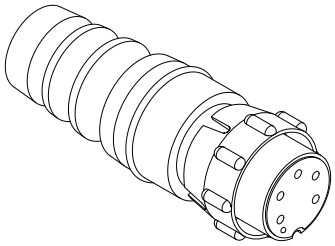

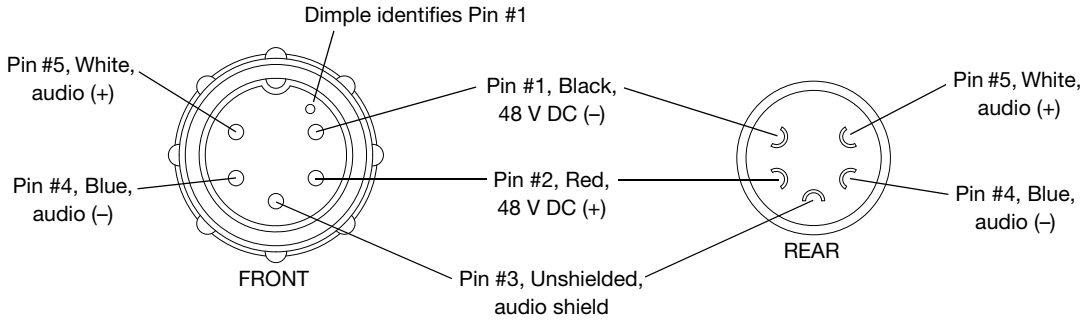

Pin Destinations for EN3 5-Pin Female Cable Mount Connector

ASSEMBLING EN3-TO-PHOENIX LOUDSPEAKER CABLES

When connecting MM-10XP loudspeakers equipped with EN3 connectors to the MPS-488HPp power supply, you need an EN3 5-pin female to Phoenix 5-pin female cable. The following procedure documents how to assemble this cable. If you are starting with an EN3-to-pigtail cable (included with the MM-10XP), you can skip steps 4–7 in this procedure.

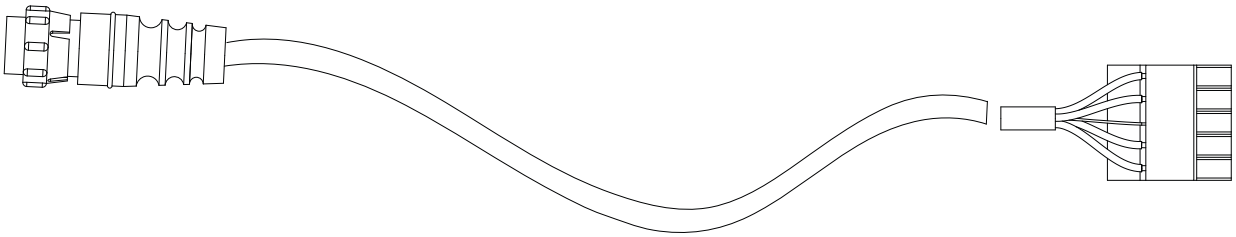

Assembled EN3-to-Phoenix Cable

To assemble an EN3-to-Phoenix cable:

1. If cable has not been stripped, strip the outer shielding 1” and then strip the black, red, blue, and white wires .275”.

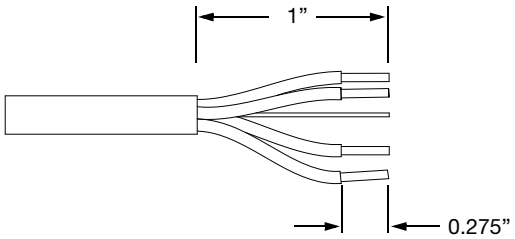

2. Insert the five exposed conductors into the five cable holes in the Phoenix connector using the following wiring scheme.

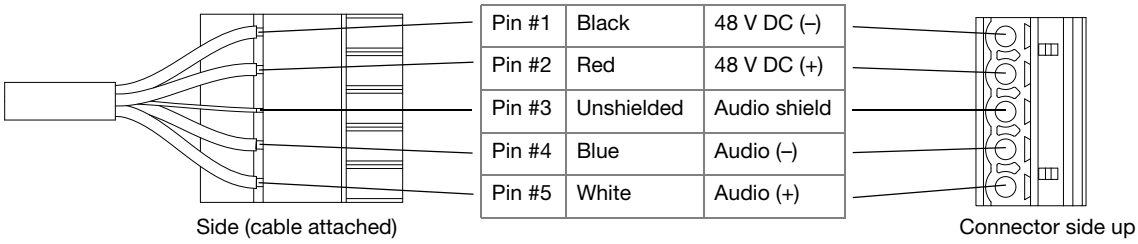

Pin #1	Black	48 V DC (–)
Pin #2	Red	48 V DC (+)
Pin #3	Unshielded	Audio shield
Pin #4	Blue	Audio (–)
Pin #5	White	Audio (+)

Phoenix 5-Pin Female Cable Mount Connector

3. Secure the conductors by tightening the five screws in the Phoenix conductor.

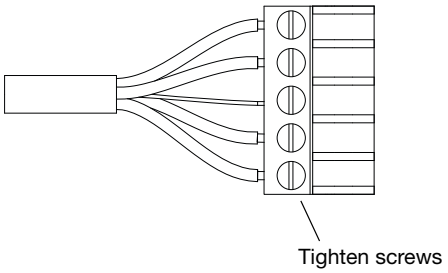

4. Disassemble the EN3 5-pin female connector and feed one end of the cable through the boot, cable clamp housing, and coupling ring.

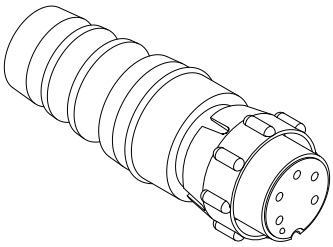

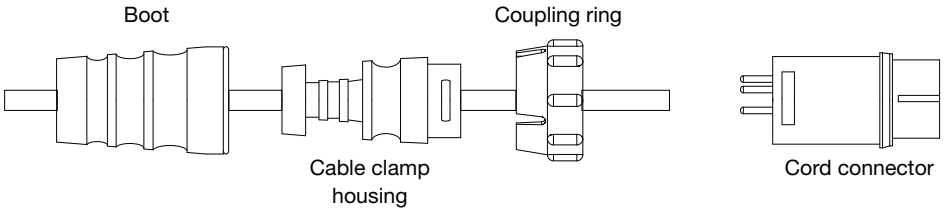

Disassembled EN3 5-Pin Female Cable Mount Connector

5. If the EN3 end of the cable has not been stripped, strip the outer shielding 1” and then strip the black, red, blue, and white wires .275”.

6. Solder the five exposed conductors to the five pins on the EN3 cord connector using the following wiring scheme.

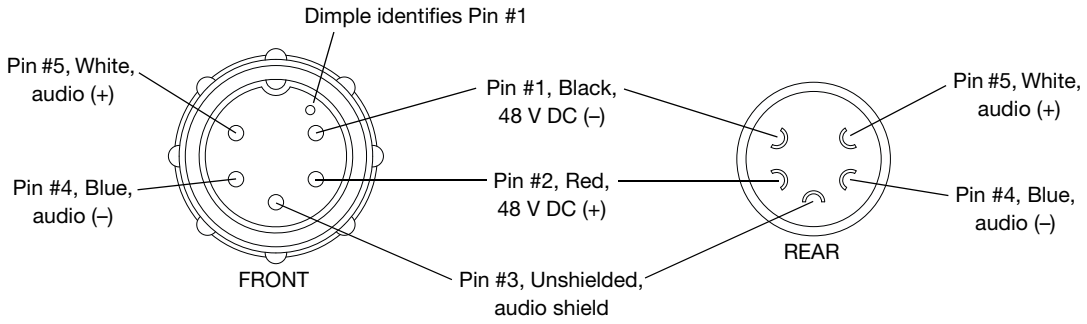

Pin Destinations for EN3 5-Pin Female Cable Mount Connector

7. Reassemble the EN3 5-pin female connector:

- Align the coupling ring's side notches with the cord connector's side notches and slide the couple ring onto the cord connector.
- Carefully insert the end of the cable clamp housing into the cord connector until it locks into place. Snap the cable clamps in the cable clamp housing into their compartments.
- Slide the boot forward so it covers the cable clamp housing completely.

ASSEMBLING PHOENIX-TO-PHOENIX LOUDSPEAKER CABLES

When connecting MM-10XP loudspeakers equipped with Phoenix connectors to the MPS-488HPp power supply, you need a Phoenix 5-pin female to Phoenix 5-pin female cable. The following procedure documents how to assemble this cable.

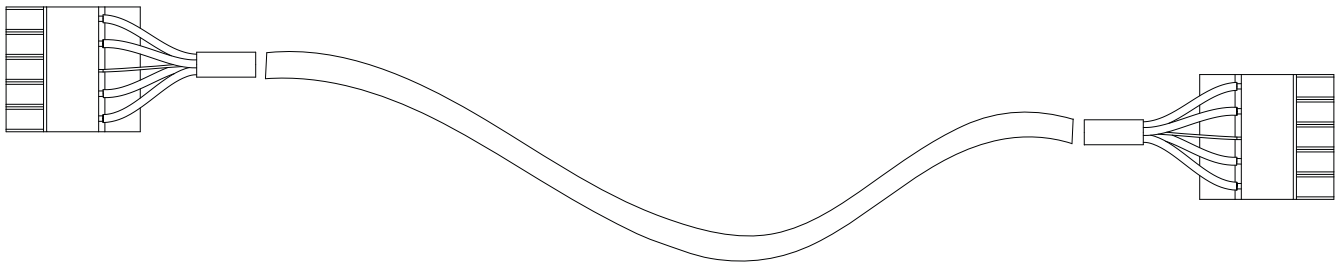

Assembled Phoenix-to-Phoenix Cable

To assemble a Phoenix-to-Phoenix cable:

1. If the cable has not yet been stripped, strip one end of the cable. Strip the outer shielding by 1" and then strip the black, red, blue, and white wires by .275".

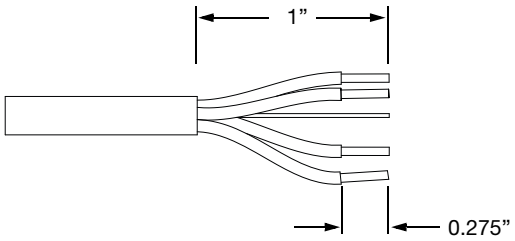

2. Insert the five exposed conductors, from one end of the cable, into the five cable holes in one of the Phoenix connectors. Use the following wiring scheme.

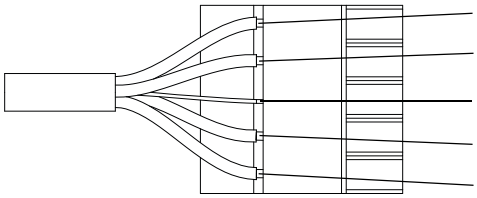

Pin #1	Black	48 V DC (–)
Pin #2	Red	48 V DC (+)
Pin #3	Shield	Audio shield
Pin #4	Blue	Audio (–)
Pin #5	White	Audio (+)

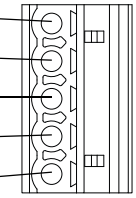

Side (cable attached)

Connector side up

Phoenix 5-Pin Female Cable Mount Connector

3. Secure the conductors by tightening the five screws in the Phoenix connector.

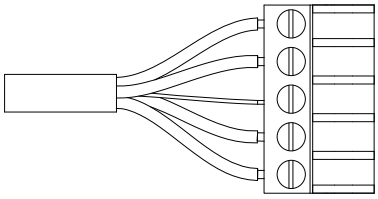

Tighten screws

4. Repeat the previous steps and attach the other end of the cable to the other Phoenix connector.
5. Verify the wiring polarity is correct for both connectors.

APPENDIX D: SPECIFICATIONS

MM-10 SPECIFICATIONS (ALL MODELS)

MM-10 Specifications (All Models)

ACOUSTICAL	
Operating Frequency Range	33 Hz – 228 Hz **Note:** Recommended maximum operating frequency range. Response depends on loading conditions and room acoustics.
Frequency Response	35 Hz – 208 Hz ±4 dB **Note:** Free-field, measured with 1/3rd octave resolution at 4 meters.
Phase Response	38 Hz – 138 Hz ±45°
Maximum Peak SPL	123 dB **Note:** Measured with music referred to 1 meter.
Dynamic Range	< 100 dB
Coverage	360°
TRANSDUCER	
Type	10" cone driver with neodymium magnet
Nominal Impedance	4 Ω
Voice Coil Size	2”
Power Handling	400 W (AES) **Note:** Measured under AES standards: transducer driven continuously for two hours with a band-limited noise signal having a 6 dB peak-average ratio.
AUDIO INPUT	
Type	Differential, electronically balanced
Maximum Common Mode Range	±5 V DC
Input Impedance	10 kΩ electronically balanced
DC Blocking	4.8 Hz high pass
CMRR	< –60 dB, typically < –72 dB (200 Hz – 3 kHz)
RF Filter	Common mode: 616 kHz Differential mode: 616 kHz
Nominal Input Sensitivity	–2.0 dBV (0.8 V rms, 1.1 V peak) continuous is typically the onset of limiting for noise and music
Input Level	Audio source must be capable of producing +16 dBV (6.3 V rms, 9.0 V peak) into 600 Ω to produce the maximum peak SPL over the operating bandwidth of the loudspeaker
AMPLIFIER	
Amplifier Type	Class D
Output Power	220 W **Note:** Wattage rating based on the maximum unclipped burst sine-wave rms voltage the amplifier will produce into the nominal load impedance: 30 V rms (42 V peak) into 4 ohms.
Total Output	440 W peak
THD, IM TIM	< .02%
Load Capacity	4 Ω
Cooling	Convection

MM-10 Specifications (All Models)

PHYSICAL	
Enclosure	Multi-ply hardwood
Finish	Black textured
Protective Grille	Hex-stamped steel with black mesh screen
Mounting	Top and side nut plates available with 3/8”or M10 threads. MUB-MM10 U-bracket mounts the sub-woofer on walls and ceilings at adjustable angles.
Dimensions	19” W x 11” H x 12” D (483 mm x 279 mm x 305 mm)
Weight	27 lbs (12.25 kg)
ENVIRONMENTAL	
Operating Temperature	0° C to +45° C
Non Operating Temperature	<–40° C or >+75° C
Humidity	To 95% at 35° C
Operating Altitude	To 4600 m (15,000 ft)
Non operating Altitude	To 95% at 35° C
Shock	30 g 11 msec half-sine on each of 6 sides
Vibration	10 Hz – 55 Hz (0.010 m peak-to-peak excursion)

MM-10XP Specifications

MM-10XP Specifications

MM-10XP REAR PANEL	
Audio/Power Connector	Phoenix 5-pin male or EN3 5-pin male (two pins for DC power, three pins for balanced audio)
Wiring	Pin 1: DC power negative (–) Pin 2: DC power positive (+) Pin 3: Balanced audio shield, chassis/earth Pin 4: Balanced audio (–) Pin 5: Balanced audio (+)
Input Polarity Switch	Reverses audio input polarity between pins 4 and 5
LED	Displays loudspeaker status
MM-10XP DC POWER	
Safety Agency Rated Operating Range	48 V DC **Note:** Tolerates voltage drops up to 30% with long cable runs.
MM-10XP Current Draw	**Note:** At 48 V DC.
Idle Current	0.16 A rms
Maximum Long-Term Continuous Current	0.90 A rms
Burst Current	2.5 A rms
Ultimate Short-Term Peak Current	3.0 A peak
Inrush Current	< 7.0 A peak

MM-10AC Specifications

MM-10AC Specifications

MM-10AC REAR PANEL	
Audio Connectors	XLR female input with XLR male loop output Pin 1: Chassis/earth through 220 kΩ, 1000 pF, 15 V clamp network to provide virtual ground lift at audio frequencies Pin 2: Signal + Pin 3: Signal – Case: Earth ground and chassis
Input Polarity Switch	Reverses audio input polarity between pins 2 and 3
AC Power Connectors	PowerCon with loop output
LED	Displays loudspeaker status
MM-10AC AC POWER	
Voltage Selection	Automatic
Safety Agency Rated Operating Range	100–240 V AC; 50/60 Hz
Turn On/Turn Off Points	90–264 V AC; 50/60 Hz
Note: No automatic turn-off voltages. Voltages above 265 V AC are fuse protected but may cause permanent damage to the power supply. Voltages below 90 V AC may result in intermittent operation.	
MM-10AC Current Draw	
Idle Current	0.13 A rms (115 V AC); 0.13 A rms (230 V AC); 0.14 A rms (100 V AC)
Maximum Long-Term Continuous Current	0.40 A rms (115 V AC); 0.25 A rms (230 V AC); 0.46 A rms (100 V AC)
Burst Current	0.9 A rms (115 V AC); 0.4 A rms (230 V AC); 1.1 A rms (100 V AC)
Ultimate Short-Term Peak Current	2.0 A peak (115 V AC); 1.4 A peak (230 V AC); 2.3 A peak (100 V AC)
Inrush Current	4.0 A peak (115 V AC); 2.4 A peak (230 V AC); 4.0 A peak (100 V AC)
Note: Current draw values for a single MM-10AC. AC Loop Output not used.	

MM-10ACX Specifications

MM-10ACX Specifications

MM-10ACX REAR PANEL	
Subwoofer Audio Connector	XLR female input Pin 1: Chassis/earth through 220 kΩ, 1000 pF, 15 V clamp network to provide virtual ground lift at audio frequencies Pin 2: Signal + Pin 3: Signal – Case: Earth ground and chassis
Input Polarity Switch	Reverses audio input polarity between pins 2 and 3 (subwoofer only)
Input Select Switch	Determines whether the subwoofer receives its source signal from the subwoofer input or satellite inputs (summed) **Note:** Input Select switch only included on the MM-10ACX model.
Gain Knob	Adjusts the subwoofer signal from completely attenuated to +10 dB **Note:** Gain knob only included on the MM-10ACX model.
AC Power Connectors	PowerCon with loop output

MM-10ACX Specifications

Satellite Loudspeaker Connectors	Two XLR female inputs Two Phoenix 5-pin male or EN3 5-pin female outputs (two pins for DC power, there pins for balanced audio) **Note:** Satellite loudspeaker connectors only included on the MM-10ACX model.
LED	Displays loudspeaker status
MM-10ACX AC POWER	
Voltage Selection	Automatic
Safety Agency Rated Operating Range	100–240 V AC; 50/60 Hz
Turn On/Turn Off Points	90–264 V AC; 50/60 Hz
Note: No automatic turn-off voltages. Voltages above 265 V AC are fuse protected but may cause permanent damage to the power supply. Voltages below 90 V AC may result in intermittent operation.	
MM-10ACX Current Draw (Subwoofer Only)	
Idle Current	0.21 A rms (115 V AC); 0.20 A rms (230 V AC); 0.23 A rms (100 V AC)
Maximum Long-Term Continuous Current	0.48 A rms (115 V AC); 0.31 A rms (230 V AC); 0.55 A rms (100 V AC)
Burst Current	1.1 A rms (115 V AC); 0.6 A rms (230 V AC); 1.3 A rms (100 V AC)
Ultimate Short-Term Peak Current	2.2 A peak (115 V AC); 1.6 A peak (230 V AC); 2.5 A peak (100 V AC)
Inrush Current	6.6 A peak (115 V AC); 3.7 A peak (230 V AC); 7.2 A peak (100 V AC)
Note: Current draw values for one MM-10ACX with no satellite loudspeakers connected. AC Loop Output not used.	
MM-10ACX Current Draw (with Two MM-4XPs)	
Idle Current	0.32 A rms (115 V AC); 0.26 A rms (230 V AC); 0.36 A rms (100 V AC)
Maximum Long-Term Continuous Current	0.90 A rms (115 V AC); 0.51 A rms (230 V AC); 1.02 A rms (100 V AC)
Burst Current	2.5 A rms (115 V AC); 1.3 A rms (230 V AC); 3.0 A rms (100 V AC)
Ultimate Short-Term Peak Current	4.5 A peak (115 V AC); 2.8 A peak (230 V AC); 5.0 A peak (100 V AC)
Inrush Current	7.6 A peak (115 V AC); 4.4 A peak (230 V AC); 8.4 A peak (100 V AC)
Note: Current draw values for one MM-10ACX with two MM-4XP satellite loudspeakers connected. AC Loop Output not used.	

MM-10 COMPLIANCE

CE
www.meyersound.com
Made in USA with domestic and foreign parts

(Pending)

TÜV Rheinland of North America, Inc. C US

N775

(Pending)

MM-10 DIMENSIONS

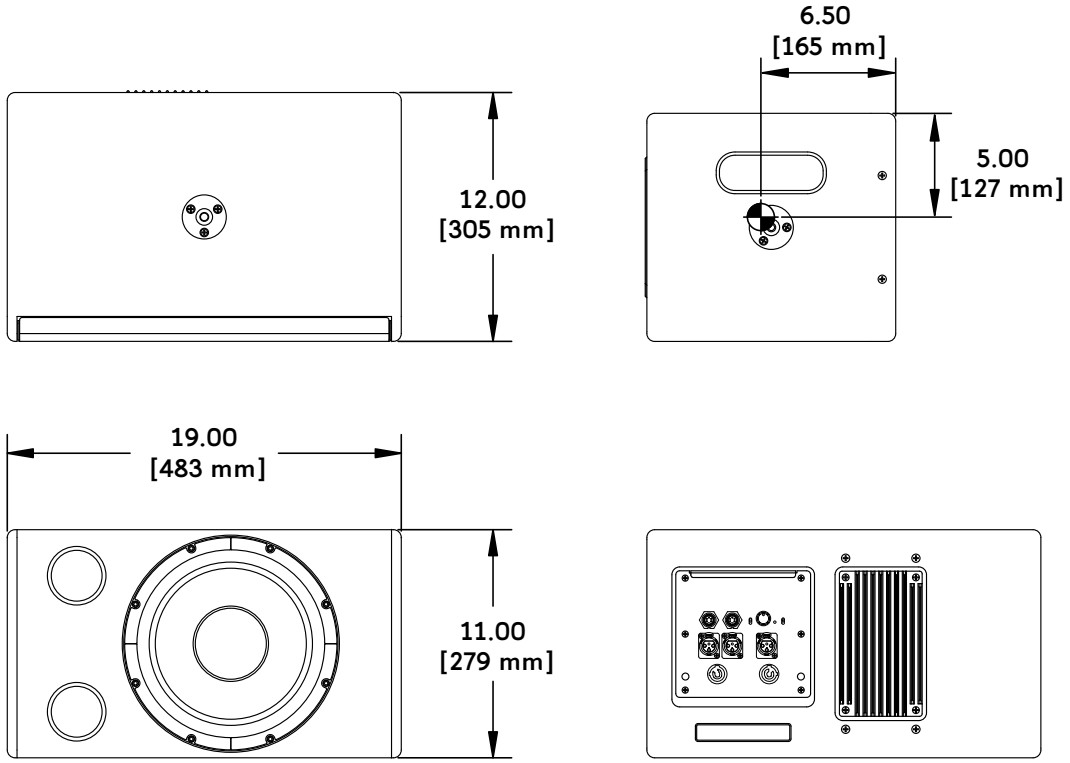

MM-10 Dimensions

thinking sound

Meyer Sound Laboratories Inc.
2832 San Pablo Avenue
Berkeley, CA 94702

www.meyersound.com
T: +1 510 486.1166
F: +1 510 486.8356

MM-10 Operating Instructions, PN 05.199.005.01 A