TIME LAPSE VCR
SERVICE MANUAL

CAUTION

BEFORE SERVICING THE UNIT, READ THE "SAFETY PRECAUTIONS" IN THIS MANUAL.

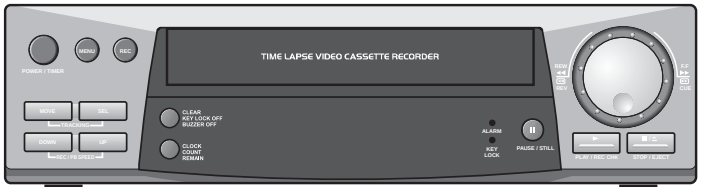

APRIL, 2006
Printed in Korea

Download from Www.Somanuals.com. All Manuals Search And Download.

TABLE OF CONTENTS

SECTION 1
SUMMARY

• SPECIFICATIONS 1-1
• LOCATION OF CUSTOMER CONTROLS 1-2
• CRITICAL PARTS REPLACING TIME TABLE 1-5
• CRITICAL PARTS DESCRIPTION 1-5

SECTION 2
CABINET & MAIN FRAME

EXPLODED VIEWS 2-1
1. Cabinet and Main Frame Section 2-1
2. Packing & Accessory Section 2-3

SECTION 3
ELECTRICAL

ELECTRICAL ADJUSTMENT PROCEDURES 3-1
1. PG ADJUSTMENT 3-1

ELECTRICAL TROUBLESHOOTING GUIDE 3-2
1. POWER(SMPS) CIRCUIT 3-2
2. SERVO CIRCUIT 3-4
3. Y/C CIRCUIT 3-6
4. AUDIO CIRCUIT 3-9
5. SYSTEM/KEY CIRCUIT 3-11
6. OSD CIRCUIT 3-12

BLOCK & CIRCUIT DIAGRAMS 3-13
1. OVERALL WIRING DIAGRAM 3-13
2. POWER BLOCK DIAGRAM 3-15
3. POWER CIRCUIT DIAGRAM 3-17
4. AUDIO BLOCK DIAGRAM 3-19
5. Y/C BLOCK DIAGRAM 3-20
6. A/V CIRCUIT DIAGRAM 3-21
7. SYSTEM BLOCK DIAGRAM 3-24
8. SYSTEM CIRCUIT DIAGRAM 3-27
9. JACK CIRCUIT DIAGRAM 3-29
10. KEY-BOARD CIRCUIT DIAGRAM 3-31

PRINTED CIRCUIT DIAGRAMS 3-33
1. MAIN P.C.BOARD 3-33
2. KEY 1 P.C.BOARD 3-35
3. KEY 2 P.C.BOARD 3-35
4. JACK P.C.BOARD 3-35

SECTION 4
MECHANISM

NOTE) The table of contents for this section is edited separately.

SECTION 5
REPLACEMENT PARTS LIST

• Mechanical Section 5-1
• Electrical Section 5-3

Download from Www.Somanuals.com. All Manuals Search And Download.

SECTION1 SUMMARY
SPECIFICATIONS

GENERAL

Head System	Four head helical scan azimuth system
Power Source	AC 100-240V, 50/60Hz
Power Consumption	Approx. 15 Watts
Back up time (clock)	30 days
Dimensions (WxHxD)	14.2” x 3.7” x 10.7” (360 x 94 x 273 mm)
Operating Temperature	41 °F~105 °F (5 °C~40 °C)
Operating Humidity	Less than 80% RH
Timer	24-hour display type
Weight	Approx. 8.4 lb (3.8 kg)
Tape Speed (NTSC)	11.12 mm/sec (6H) , 3.70 mm/sec (18H), 2.22 mm/sec (30H), 72H ~ 960H
Tape Speed (PAL)	11.695 mm/sec (6H) , 3.89 mm/sec (18H), 2.33 mm/sec (30H), 72H ~ 960H
Maximum Recording Time	6 hours (NT:T-120/PAL:E-180, 6H), 18 hours (NT:T-120/PAL:E-180, 18H), 30 hours (NT:T-120/PAL:E-180, 30H), 72H ~ 960H
Tape Width	0.5 in. (12.7 mm)
Rewind Time	About 65 seconds (NT:T-120)(PAL:E-180)
Video Signal System(PAL)	CCIR Standard (625 lines, 50 fields) PAL type color signal
Video Signal System(NTSC)	EIA Standard (525 lines, 60 fields) NTSC type color signal
Video Input	1.0 Vp-p 75 ohms unbalanced
Video Output	1.0 Vp-p 75 ohms unbalanced
Signal to Noise Ratio	More than 43 dB (6H mode)
Conventional audio	
Input (LINE)	-6.0 dBm more than 47 kohms
Output (LINE)	-6.0 dBm less than 1.5 kohms
S/N Ratio	More than 43 dB (6H mode)
Frequency Range	200 Hz to 10kHz (6H mode)

* Designs and specifications are subject to change without notice.
* Weight and dimensions shown are approximate.

Download from Www.Somanuals.com. All Manuals Search And Download.

SECTION1 SUMMARY
LOCATION OF CUSTOMER CONTROLS

FRONT

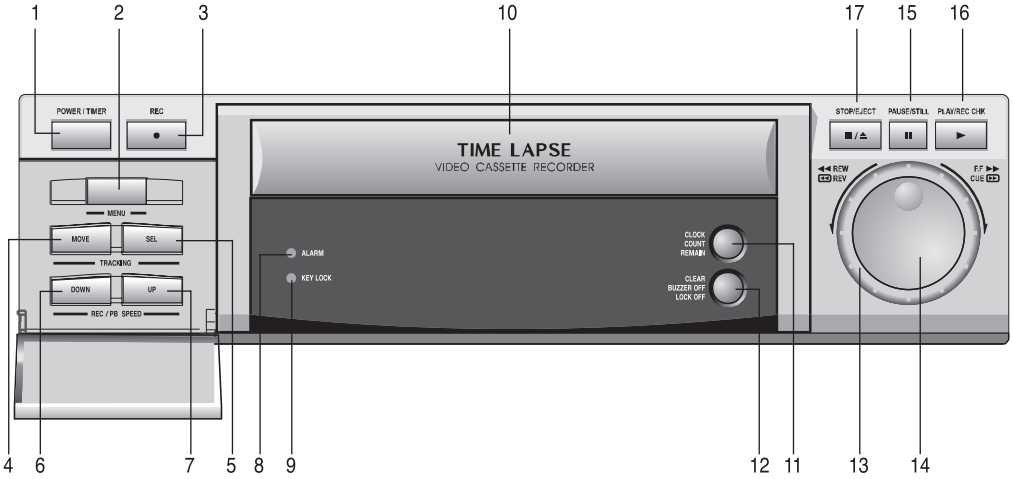

1 POWER/TIMER BUTTON
2 MENU BUTTON
3 REC (RECORD) BUTTON
4 MOVE BUTTON
5 SEL (SELECT) BUTTON
6 DOWN BUTTON
7 UP BUTTON
8 ALARM INDICATOR
9 KEY LOCK INDICATOR
10 CASSETTE LOADING SLOT
11 CLEAR, KEY LOCK OFF, BUZZER OFF
12 CLOCK, COUNT, REMAIN
13 SHUTTLE RING
14 JOG RING
15 PAUSE/STILL BUTTON
16 PLAY/REC CHECK BUTTON
17 STOP/EJECT BUTTON

REAR

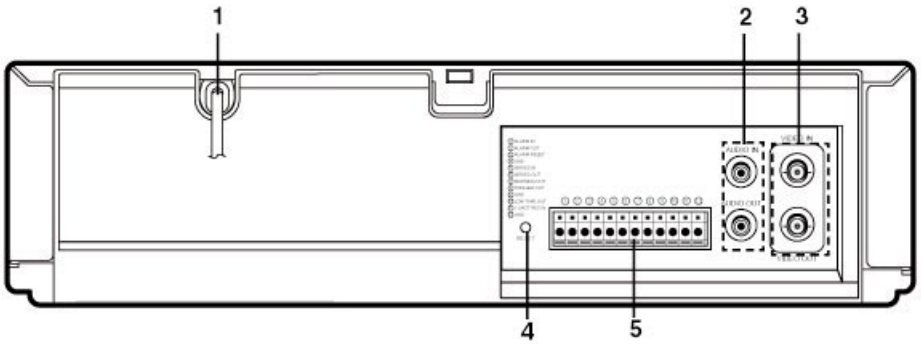

1 POWER CORD
2 AUDIO IN/OUT JACK
3 VIDEO IN/OUT JACK
4 RESET BUTTON
5 12-PIN TERMINAL BLOCK

Download from Www.Somanuals.com. All Manuals Search And Download.

SECTION1 SUMMARY
LOCATION OF CUSTOMER CONTROLS

INDICATOR PANEL

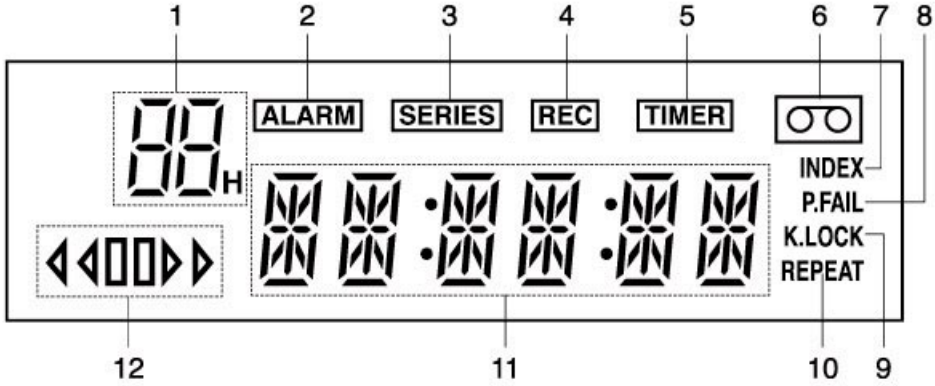

1 TIME LAPSE VCR TIME INDICATION
2 ALARM INDICATION
3 SERIES INDICATION
4 RECORD INDICATION
5 TIMER INDICATION
6 CASSETTE INDICATION
7 INDEX INDICATION
8 POWER FAILURE INDICATION
9 KEY LOCK INDICATION
10 REPEAT INDICATION
11 FUNCTION INDICATION
12 VCR FUNCTION INDICATION

VCR FUNCTION INDICATION

PLAYBACK INDICATION	
PLAYBACK	▷
PAUSE STILL	▯▯
FAST FORWARD	▷▷
REWIND	◁◁
FORWARD SLOW PICTURE/ FORWARD FIELD ADVANCE	▯▷
REVERSE SLOW PICTURE/ REVERSE FIELD ADVANCE	◁▯
CUE	▷ ▷
REVIEW	◁ ◁

RECORDING INDICATION	
RECORDING	▷ REC
TIMER RECORDING	▷ REC TIMER
ALARM INDEX	INDEX
ALARM RECORDING	ALARM
SERIES RECORDING	SERIES

Download from Www.Somanuals.com. All Manuals Search And Download.

TERMINAL SIGNAL LEVELS

TERMINAL	SIGNAL LEVEL		IN/OUT	DESCRIPTION
1. ALARM IN	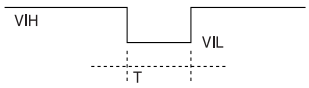	VIH : 4 ~ 5V VIL : 0 ~ 0.6V T : above 250 msec	INPUT	The input signal that makes 'Alarm Record' work
2. ALARM OUT	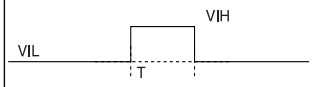	VIH : 4 ~ 5V VIL : 0 ~ 0.6V T : ALARM REC STATE	OUTPUT	Outputs whether 'Alarm Recording' is working
3.ALARM RESET	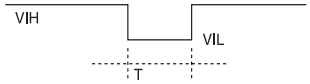	VIH : 4 ~ 5V VIL : 0 ~ 0.6V T : above 250 msec	INPUT	The terminal that stops 'Alarm Record' in Auto mode
5. SERIES IN	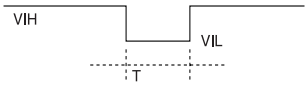	VIH : 4 ~ 5V VIL : 0 ~ 0.6V T : above 250 msec	INPUT	The input terminal to make 'Series Record' work
6. SERIES OUT	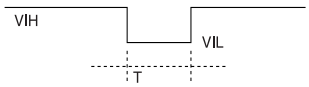	VIH : 4 ~ 5V VIL : 0 ~ 0.6V T : above 250 msec	OUTPUT	Output signal appears when the tape reaches to end or deck is error in recording.
7. WARNING OUT	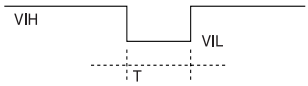	VIH : 4 ~ 5V VIL : 0 ~ 0.6V T : until any-key is pressed	OUTPUT	Outputs whether VCR deck is error.
8. TRIGGER OUT	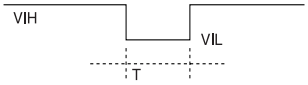	VIH : 4 ~ 5V, VIL : 0 ~ 0.6V 8 msec : NTSC 10 msec : PAL	OUTPUT	The signal is output which is used by switching several cameras in general space with using camera multi-plexer.
10. LOW TAPE OUT	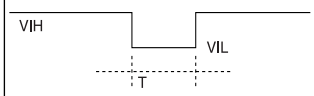	VIH : 4 ~ 5V VIL : 0 ~ 0.6V T : below 5 min, end of tape	OUTPUT	As the terminal that outputs that tape remains less than 5 minutes in recording, it isn't output in '1-shot Record'.
11. 1-SHOT REC IN	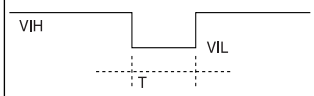	VIH : 4 ~ 5V VIL : 0 ~ 0.6V T : above 250 msec	INPUT	The terminal that makes '1-short Record' work in Auto mode
4, 9, 12. GND	-	0V	COMMON	

Download from Www.Somanuals.com. All Manuals Search And Download.

SECTION1 SUMMARY
CRITICAL PARTS REPLACING TIME TABLE

No.	DESCRIPTION	1500	3000	5000	6000	7500	9000	10000	12000	Test freatures	Specification
1	DRUM ASSY	●	●	●	●	◆	●	●	●	RF out level	-4dB and below
2	ARM ASSY CLEANER	▲	▲	▲	▲	◆	▲	▲	▲	Wear status	Whether extraneous matters come out
3	MOTOR CAPSTAN (D-35)	●	●	●	●	◆	●	●	●	W/F(WTD)	0.4% and below
4	BELT CAPSTAN								◆	Belt tension	Variation amount : within 40%
5	BASE ASSY A/C	●	●	●	●	●	●	●	◆	Audio and CTL out level	-6dB and below
6	HEAD F/E	●	●	●	●	●	●	●	◆	The rate of erasing (1KHz)	45dB min
7	ARM ASSY IDLER								◆	The capacity of Idler for moving	4~12 g
8	HOLDER ASSY PINCH				◆				◆	Surrace solidity of Roller	60~90 °
9	BAND ASSY TENSION								◆	Back Torque	40~70 g
10	HOUSING ASSY	▲	▲	▲	▲	▲	▲	▲	◆	CST loading status	there shouldn't be any space betwween CST and compartment
11	CAPSTAN SOFT BRAKE				◆				◆	Felt wear	whether there is touch noise
12	CLUTCHAY				◆				◆	Torque(Play, Rev)	40~140gcm, 100~210gcm

Reference :

◆ : Changing ● : Cleaning ▲ : Checking

Notes :

- Check the running path adjustment when you change the itens 1, 3, 5, 6 and 10.
- Check the back tension when you change Band Assy Tension.

CRITICAL PARTS DESCRIPTION

1.	Drum Ass'y	Consists of video head, rotary trans and motor. records video and audio information on the tape, and play the tape back.(Audio information is recorded only on the Hi-Fi models)
2.	Arm Ass'y Cleaner	Cleans video head and rotation head automatically.
4.	Motor Capstan	Moves the tape with regular speed.
5.	Belt Capstan	Transfers rotative energy of capstan motor to the driving system.
6.	Brake Ass'y Capstan	Brakes rotative energy of capstan motor.
7.	Base Ass'y A/C	Consists of three head. Audio erase head in the left upper erases audio signal in dubbing. Audio head in the right upper records and playes the audio signal. CTL head in the right lower records and detects CTL pulse to control tape speed.
8.	Head F/E	Is abbreviation of Full Erased Head. erases the signal recorded on a tape clearly and absorb vibration of tape.
12.	Arm Ass'y Idler	Is located between T/UP reel and supply reel. Transfers ratative energy of capstan motor to T/UP reel or supply reel.
13.	Holder Ass'y Pinch	Sticks a video tape to capstan motor and has the tape played without being slipped from capstan motor axle.
14.	Band Ass'y Tension	Has supply reel loosened properly with giving it some tensile force.
15.	Arm Ass'y	Makes the cassette tape inserted be loaded and ejected precisly and safely.
16.	Clutch Ass'y	Plays the tape with trasfering rotative energy of capstan motor to idler reel.

Download from Www.Somanuals.com. All Manuals Search And Download.

SECTION2 CABINET & MAIN FRAME EXPLODED VIEWS

1. Cabinet and Main Frame Section

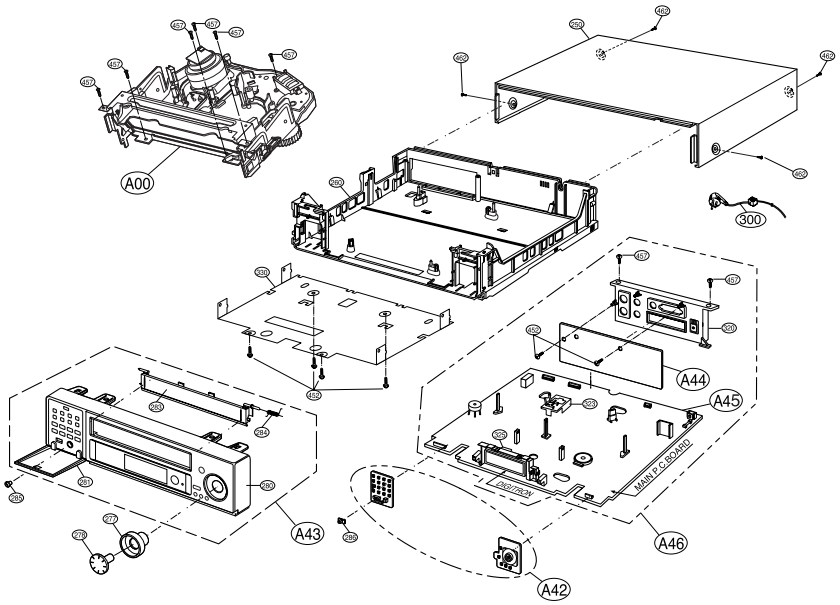

Cabinet & Main Frame Section Parts list

MODEL : TL-AT130M RUN DATE : 2004.03.12

S	AL	LOCA.NO.	PART NO	DESCRIPTION	SPECIFICATION	REMARKS
				ASSEMBLY SECTION		
		A00	6721R-0771U	DECK ASSEMBLY,VIDEO	DECK/MECHA D35 LG T/L (4HD(ALL	
		A42	6871R-8283A	PWB(PCB) ASSEMBLY,TOTAL	T/L VCR KEY2 JOG/SHUTTLE	
		A43	3721R-F826D	PANEL ASSEMBLY,FRONT	CCD TIME LAPSE PANEL FRONT ASS	
		A44	6871R-4462A	PWB(PCB) ASSY,TOTAL	TL-AR30 (SERIES) - W. RS232C -	
		A45	6871R-7050B	PWB(PCB) ASSEMBLY,TOTAL	T/L VCR TL-AT130M MAIN	
		A46	3501R-7050B	BOARD ASSEMBLY	VCR TL-AT130M MAIN	
				PARTS SECTION		
		250	3110R-S040F	CASE	LV-TL1960 2960 MOLD AIRHALL BA	
		260	3210R-0023A	FRAME	VCR - MAIN	
		277	4940R-Z075A	KNOB	SHUTTLE(TL-AR30M)	
		278	4940R-Z076B	KNOB	CCD TL-AT130 MOLD	
		280	3720R-F721D	PANEL,VIDEO	CCD LV-TL1960 S MOLD HIPS 40AF	
		281	524-013A	MAGNET	VCR - ASSY DOOR	
		283	3580R-V090A	DOOR	CCD TIME LAPSE MOLD DOOR CST	
		284	442-681A	SPRING	DOOR	
		285	4940R-Z086A	KNOB	CCD LV-TL124 MOLD	
		286	4940R-S017A	KNOB	SLIDE (LV-TL24)	
		300	6410RZHV01A	POWER CORD	IT10S2(6A/250V) VOLEX IMMETRO	
		320	3721R-D031N	PANEL ASSEMBLY, DISTRIBUTOR[NOR	LV-TL1960S 2960S NEW ASSY (RS-	
		323	3111R-0089B	CASE ASSY	PRE-AMP (PBSB-SH)	
		325	4931R-0024D	HOLDER ASSEMBLY	DIGI(MONO-ENABLE)	
		330	3550R-0210A	COVER	BOTTOM(LARGE)	
				SCREW		
		452	353-051A	SCREW,DRAWING	SPECIAL	
		457	353-051E	SCREW,DRAWING	SPECIAL (3X12)	
		462	353-136A	SCREW,DRAWING	SPECIAL(FBK) (353S353A)	

Download from Www.Somanuals.com. All Manuals Search And Download.

SECTION2 CABINET & MAIN FRAME EXPLODED VIEWS

1-1. Cabinet and Main Frame Section

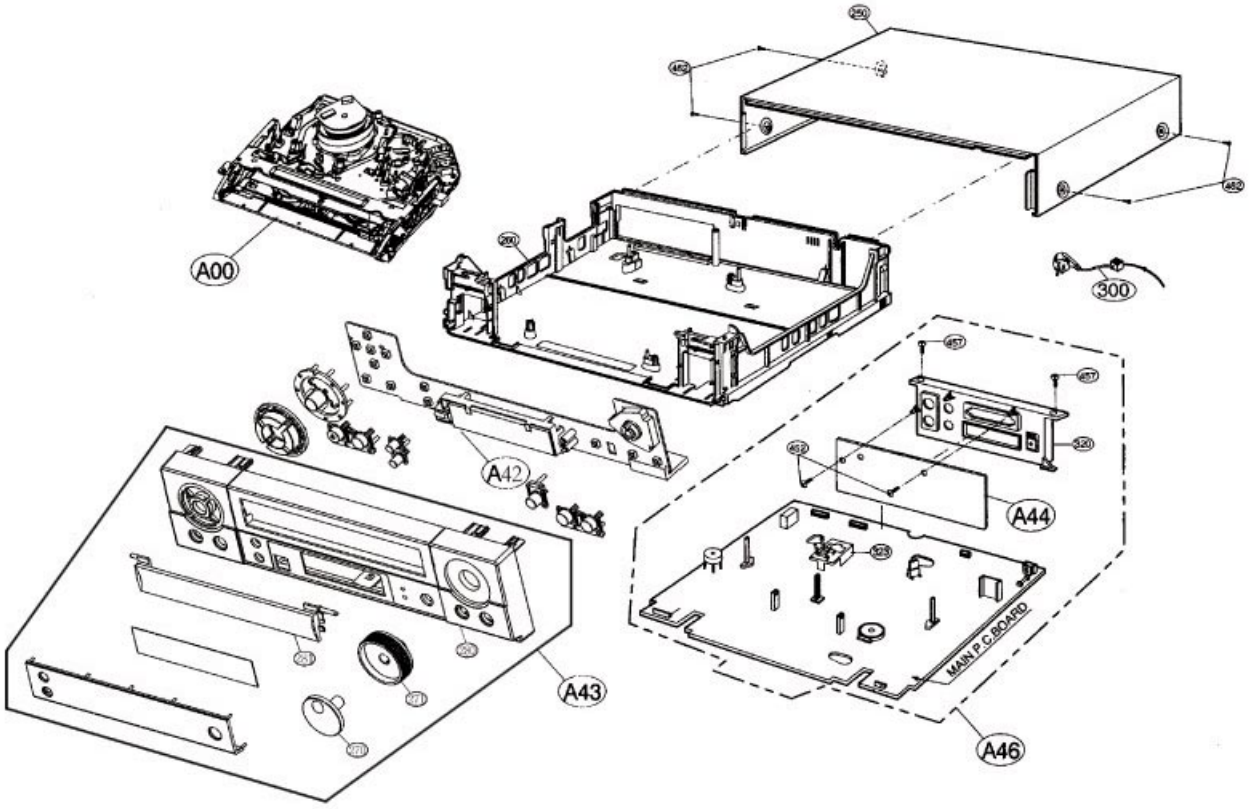

Cabinet & Main Frame Section Parts list

ASSEMBLY PARTS SECTION

A42	6871RK5700K	Ass'y Front PCB	SNILN4T3526
A43	05503805	ASS'Y FRONT CAVINET	NTH960 C-TYPE
A44	6871R-4462A	Ass'y Ant. PCB	TL-AR30(SERIES)
A46	3501RK3200B	Ass'y Main PCB	CCD LV-TL1960

Download from Www.Somanuals.com. All Manuals Search And Download.

2. Packing & Accessory Section

NOTE

Refer to "REPLACEMENT PARTSLIST" in order to look for the part number of each part.

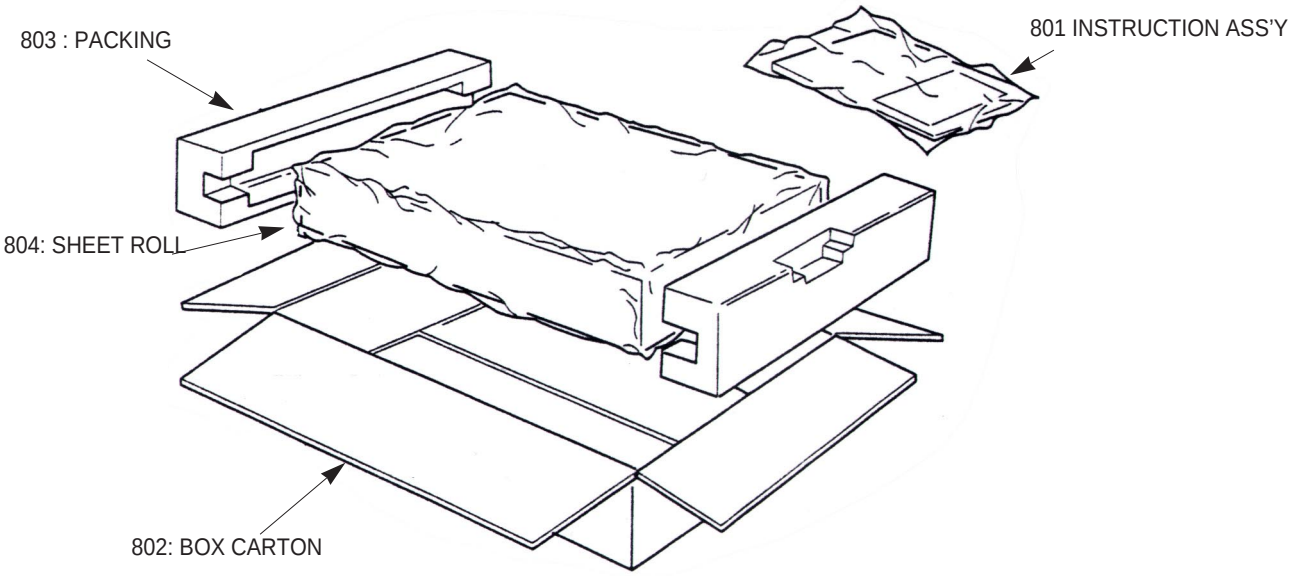

• Packing Accessory Section Parts list

MODEL : TL-AT130M RUN DATE : 2004.03.12

S	AL	LOCA.NO.	PART NO	DESCRIPTION	SPECIFICATION	REMARKS
		801	3835RS0069N	INSTRUCTION ASSEMBLY	CCD TL-AT330M-AABBDL1_ENG_POR_	
		802	3890R-C065K	BOX,MASTER	TL-AT330M AABBDL . 1	
		803	3920R-E016A	PACKING	Packing LV-TL24I 0.02 0 EPS 10	
		804	3858R-S001A	SHEET (MECH)	Packing LDPE 600M 630MM 0.5 VC	
		808	534-008C	BATTERY,MANGANESE	AAAM(R03) SEOTONG 1-5 V - 1PA	
		900	6711R1P041H	REMOTE CONTROLLER ASSEMBLY	P9 LV-TL1960	

Download from Www.Somanuals.com. All Manuals Search And Download.

SECTION3 ELECTRICAL
ELECTRICAL ADJUSTMENT PROCEDURES

1. PG ADJUSTMENT

MODE	SPECIFICATION	OBJECT MEASURED	OBJECT ADJUSTED
PLAYBACK IN SP	PG : 416 ± 20μsec	V.OUT JACK	VR501

1. Connect CH-1 of the oscilloscope to W357 and W362, and adjust it to 1Vp-p as TRIGGER.
   (In case of 10:1 Probe, adjust it 50m Vp-p)
2. Connect CH-2 of the oscilloscope to V.OUT JACK and adjust it to 0.5Vp-p.
   (In case of 10:1 Probe, adjust it 50 Vp-p)
3. Adjust time of the oscilloscope to 0.1 msec.
4. Adjust the range between FLLING EDGE part of video vertical trigger signal and video vertical trigger signal to the specification(416±20μsec) with changing VR501.

WAVEFORM

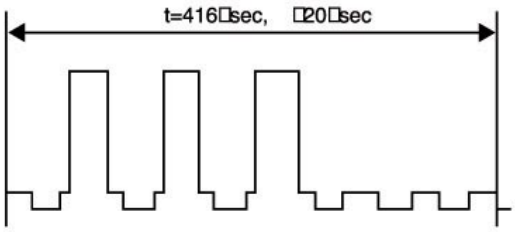

• CONNECTION CHART OF MAIN PWB

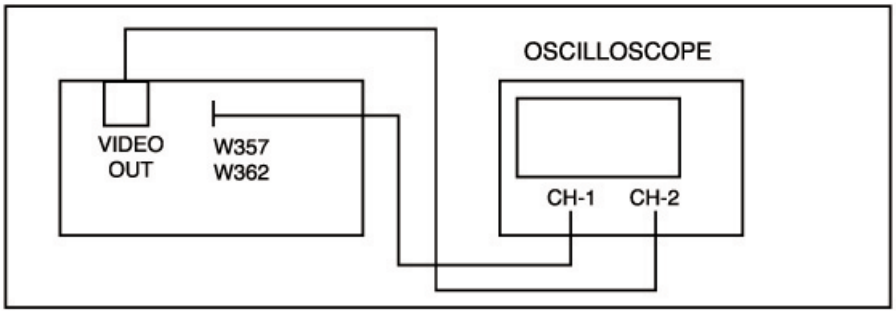

Fig 3-1. Connection chart of PG adjustment

Caution

When repairing the power part just after pulling out the power code, there is hazard of electical shock caused by the charged electricity at the peripheral circuit component(primary power) such as condenser C807(150μF). So begin repairing after doing procedure below.

1. Set the volt meter up to resistance measurement.(In case of digital volt meter, set it up to over 20MΩ.)
2. Discharge electicity with putting the measuring terminal lines(+, 1 probe) of volt meter at the ends of condenser C103.(You don't have to put the polarity of the measuring terminal lines on the same polarity of the condenser.)

Download from Www.Somanuals.com. All Manuals Search And Download.

ELECTRICAL TROUBLESHOOTING GUIDE

1. Power Circuit(SMPS)

(1) No 5.3 A

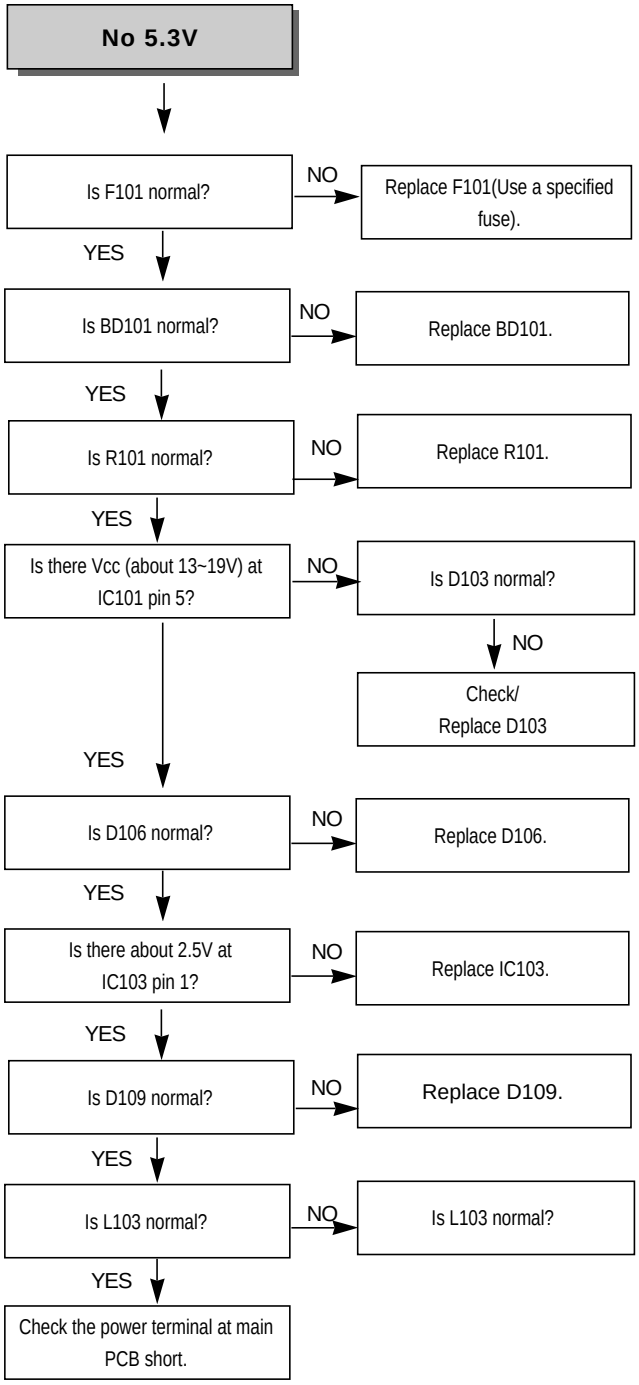

(2) No 9V

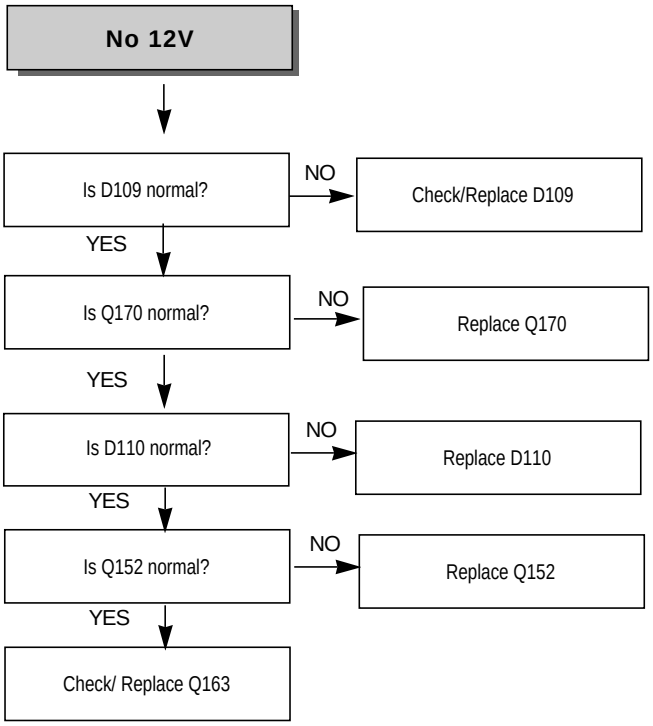

(3) No 24 V

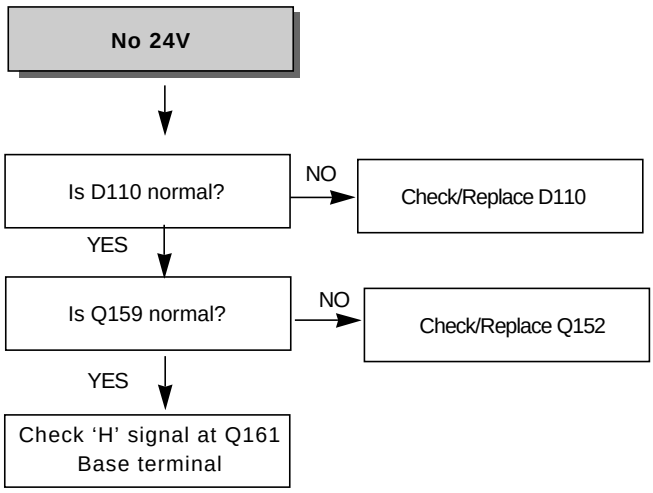

Download from Www.Somanuals.com. All Manuals Search And Download.

(4) No 5.2 A (TO AVCP, BIAS)

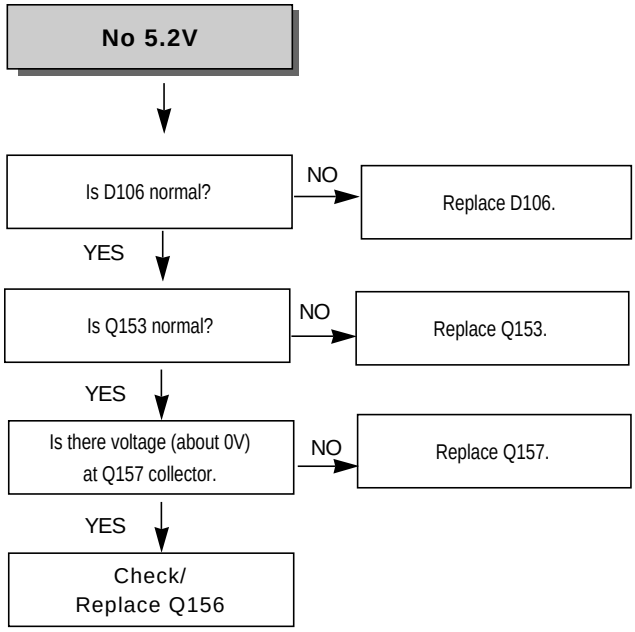

(5) No 10V

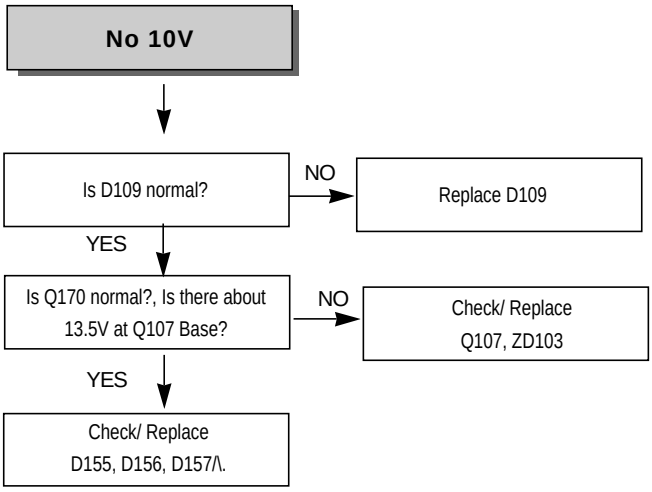

Download from Www.Somanuals.com. All Manuals Search And Download.

2. SERVO CIRCUIT

(1) Video is unstable in PB mode

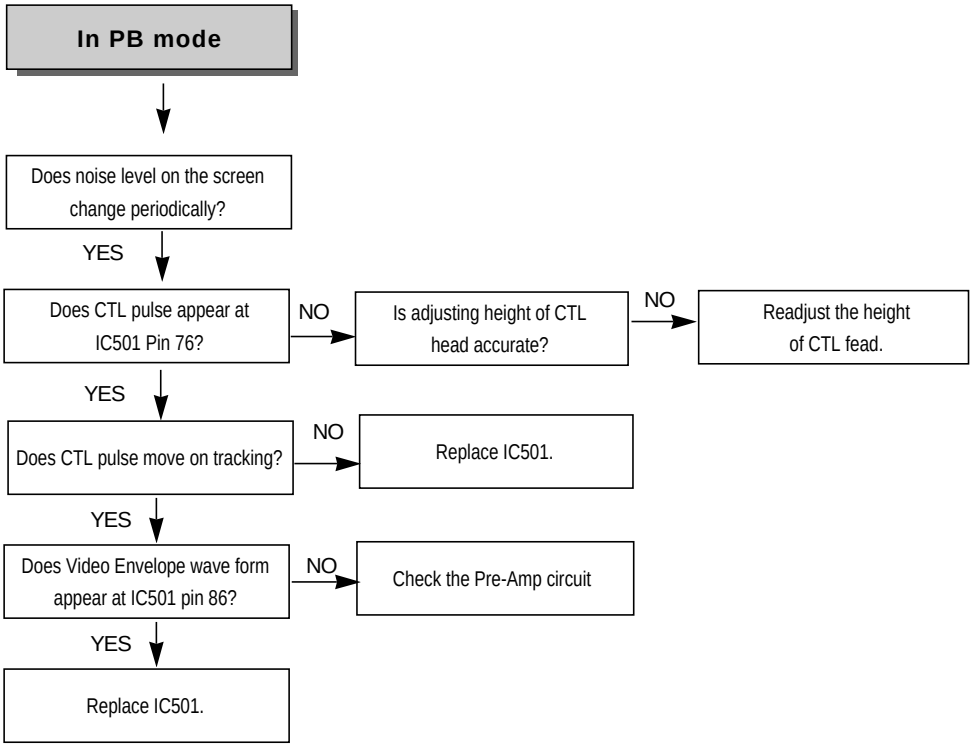

(2) Drum motor stops

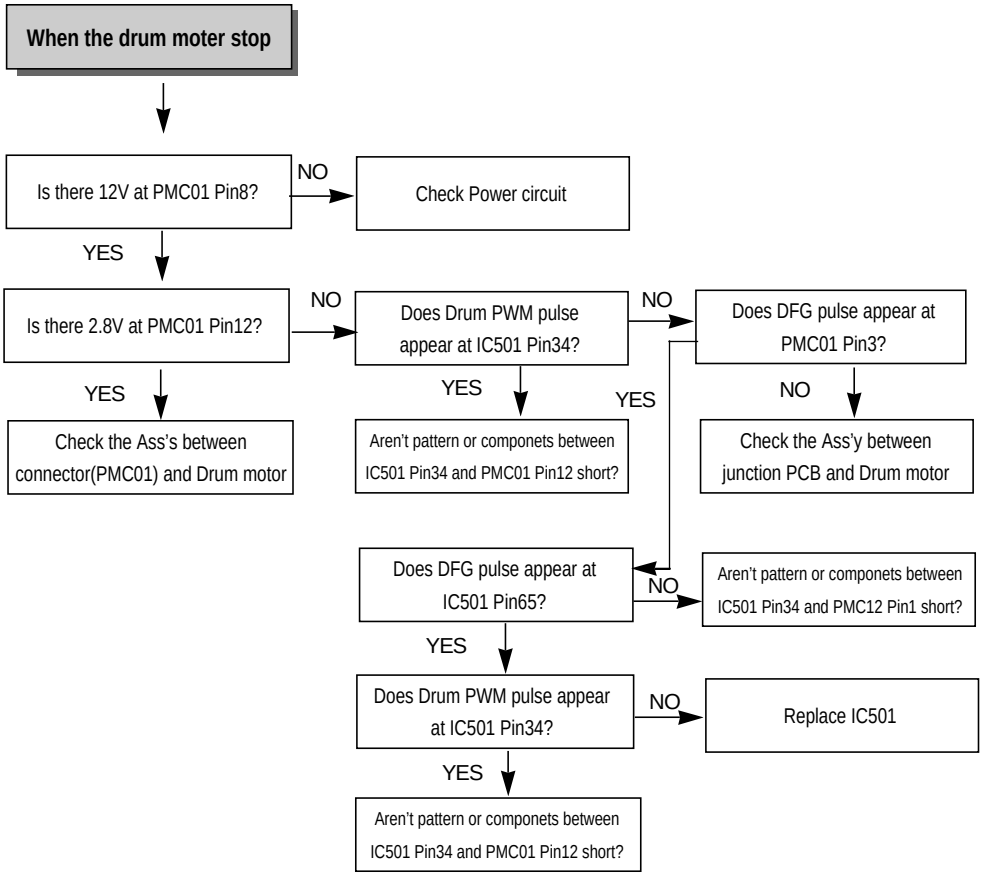

Download from Www.Somanuals.com. All Manuals Search And Download.

(3) Capstan motor stops

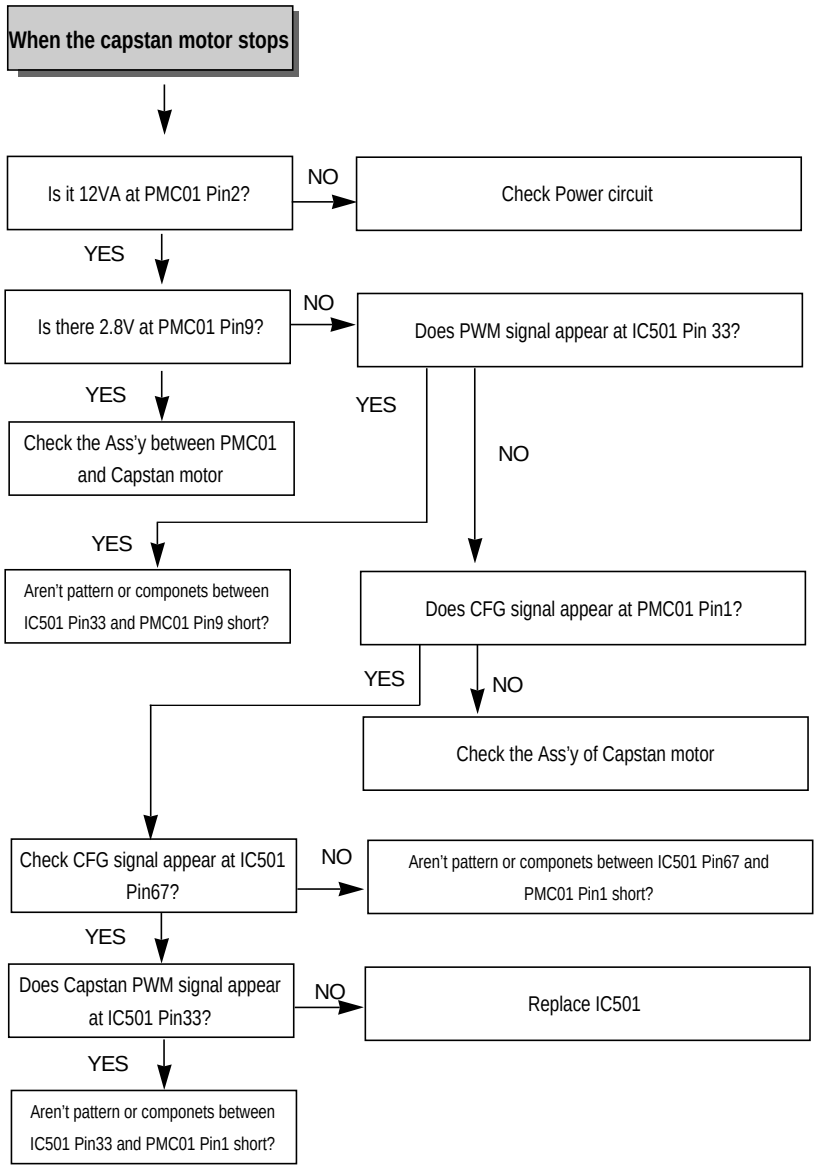

Download from Www.Somanuals.com. All Manuals Search And Download.

3. Y/C CIRCUIT

(1) No Video in EE Mode

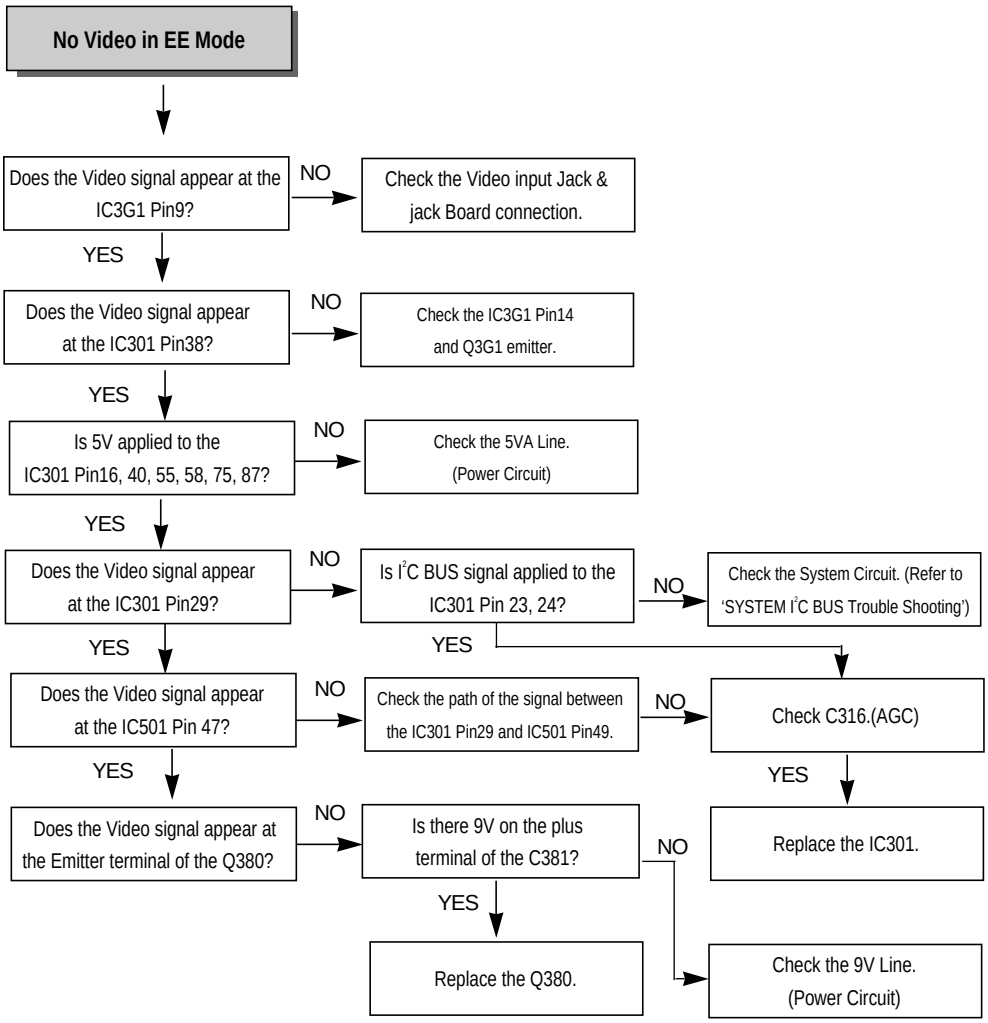

Download from Www.Somanuals.com. All Manuals Search And Download.

(2) When the Y(Luminance)signal doesn't appear on the screen in PB Mode.

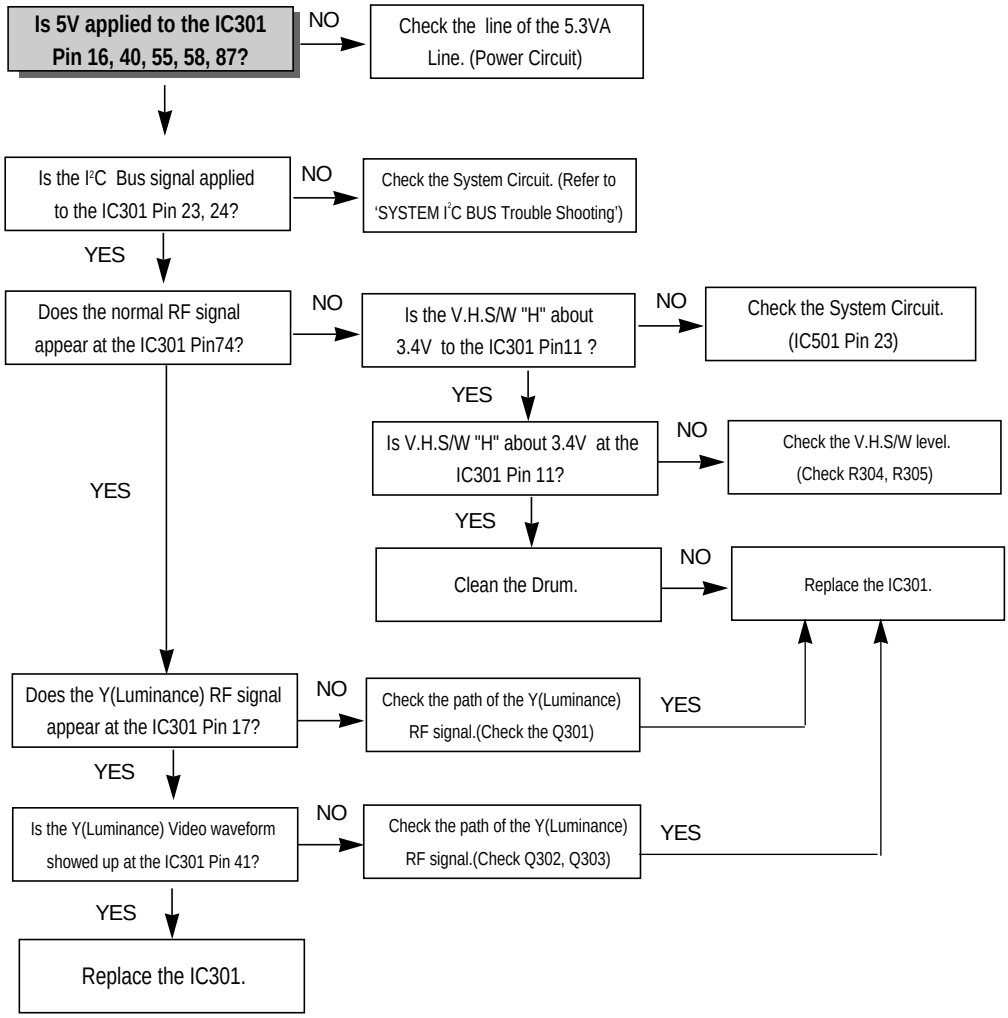

Download from Www.Somanuals.com. All Manuals Search And Download.

(3) When the C(Color) signal doesn't appear on the screen in PB Mode

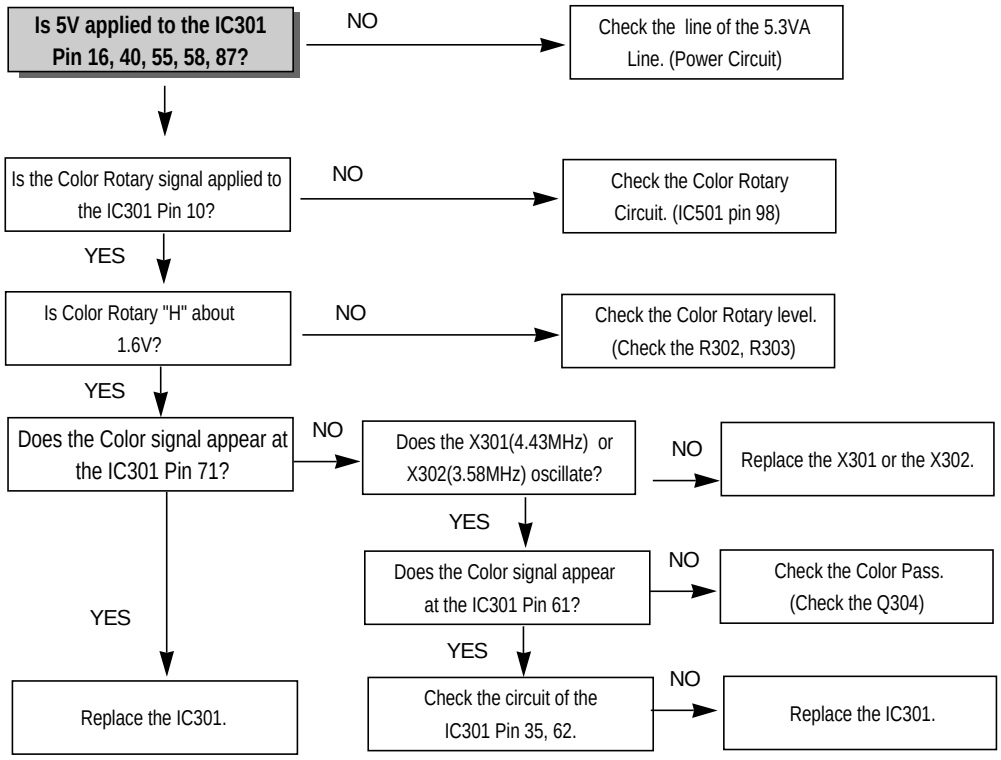

(4) When the Video signal doesn't appear on the screen in REC Mode.

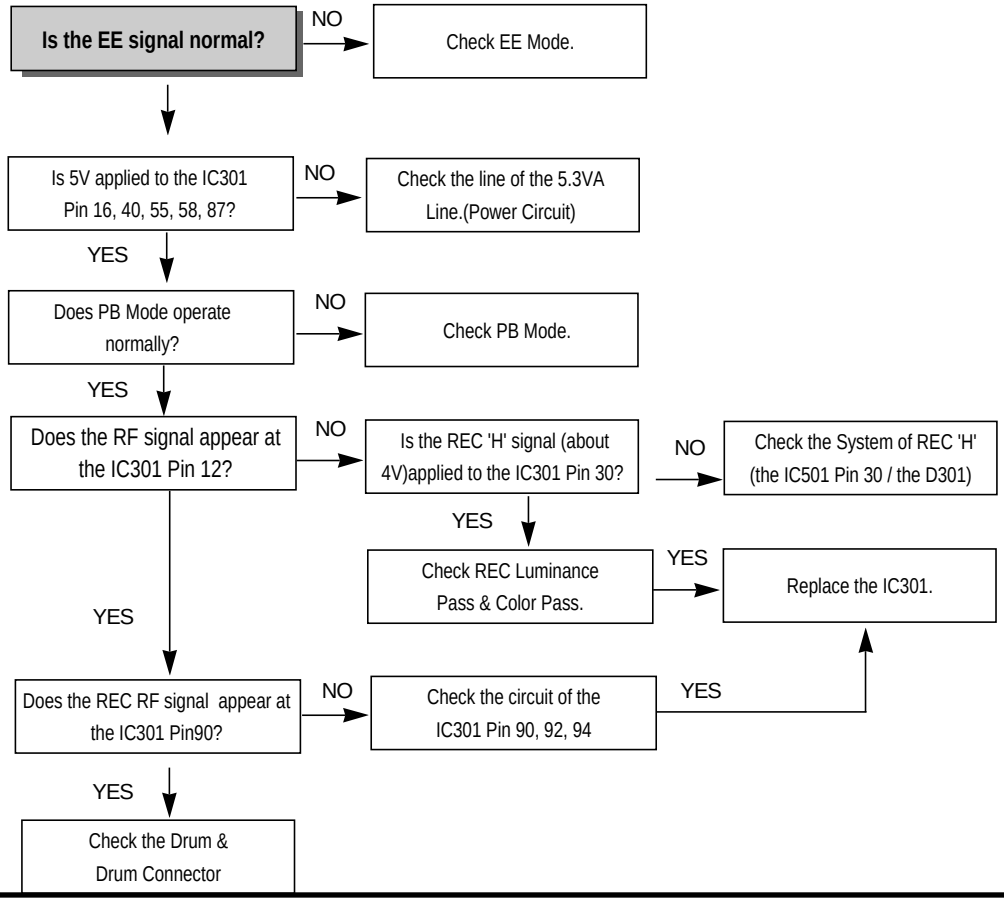

Download from Www.Somanuals.com. All Manuals Search And Download.

4. AUDIO CIRCUIT

(1) No sound in EE Mode

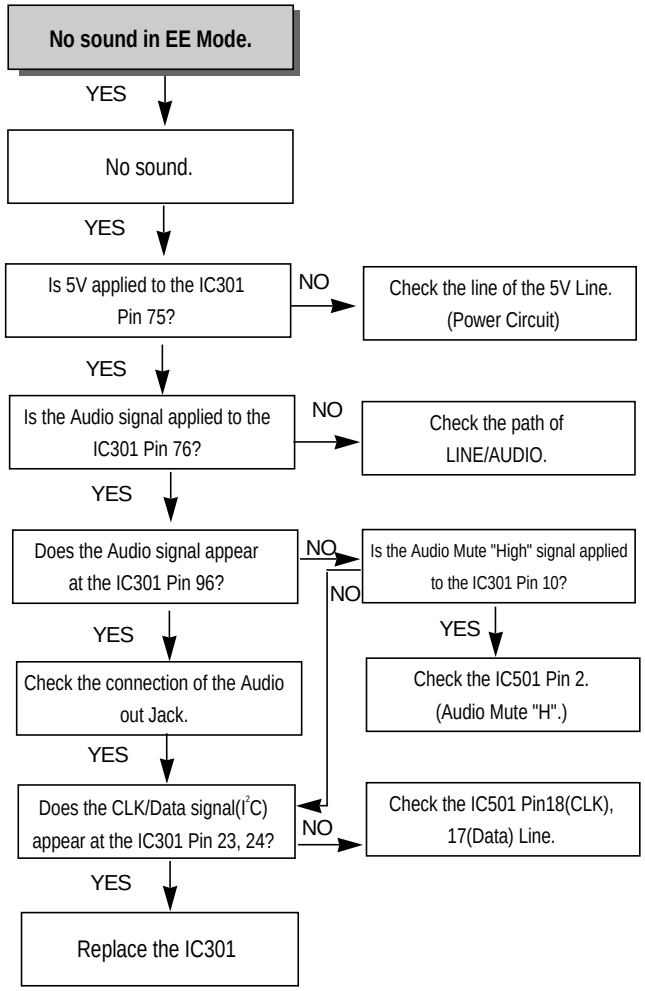

(2) No sound in PB MODE

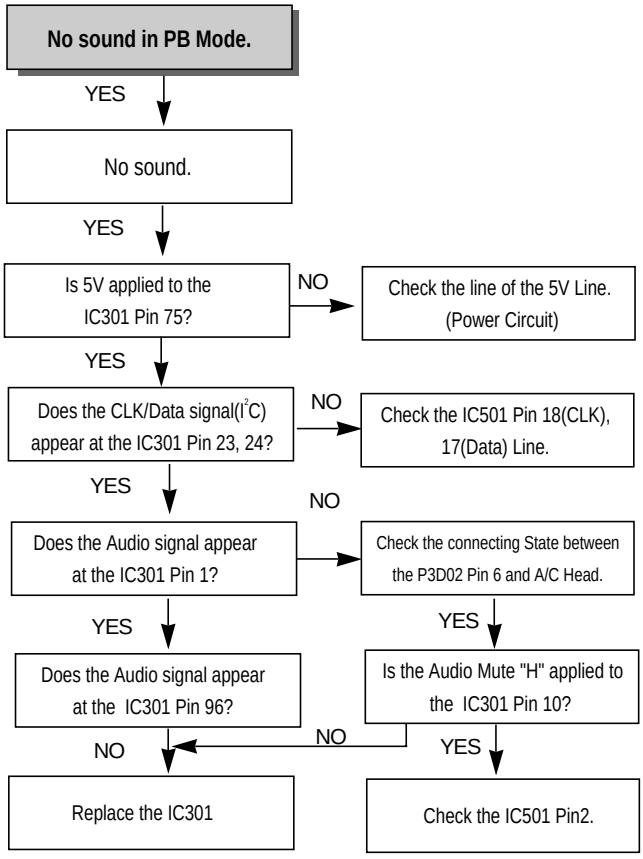

Download from Www.Somanuals.com. All Manuals Search And Download.

(3) No sound in REC Mode.

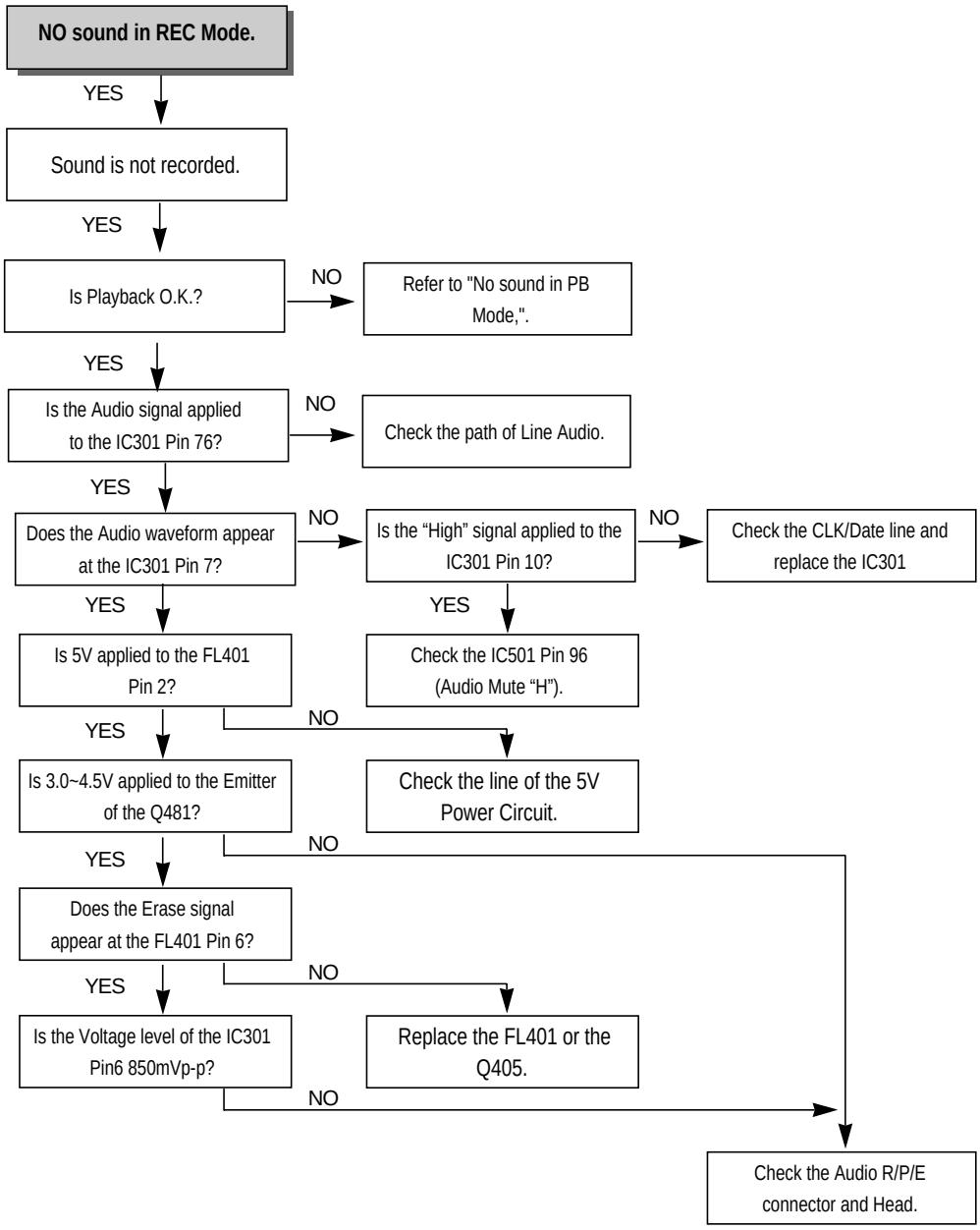

Download from Www.Somanuals.com. All Manuals Search And Download.

5. SYSTEM/KEY CIRCUIT

(1) AUTO STOP

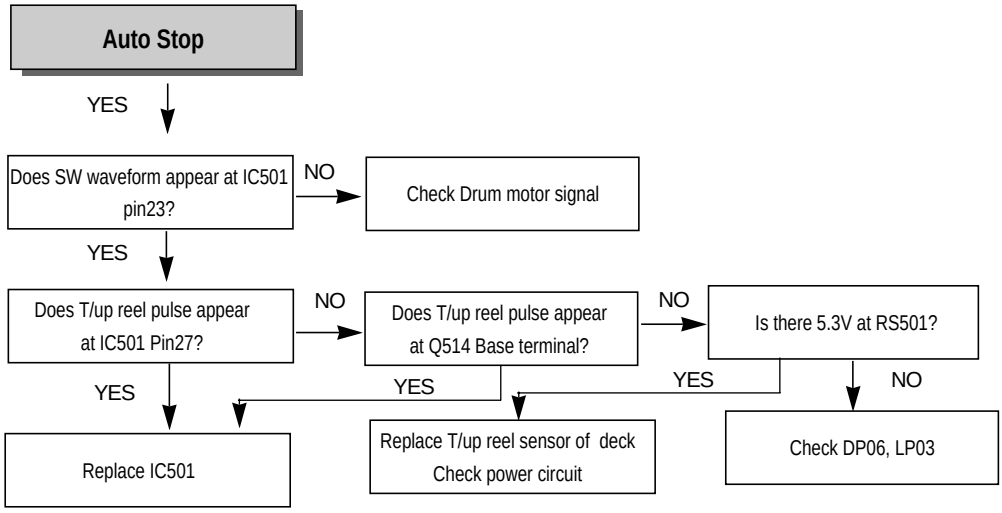

(2) No cassette tape loading

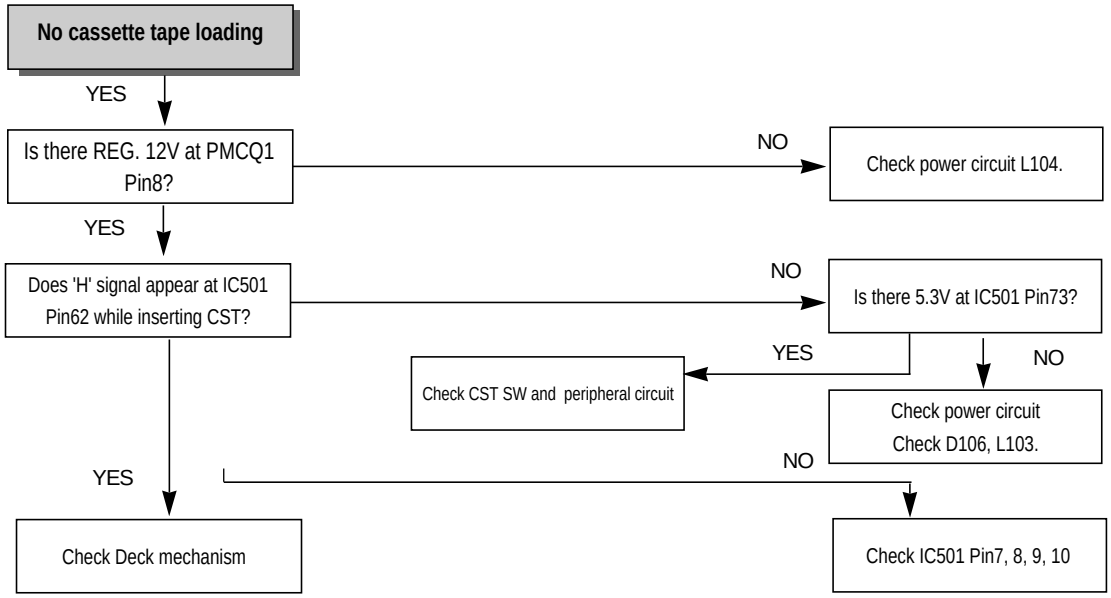

*Caution : Auto stop can occur because Grease or Oil is dried up

Download from Www.Somanuals.com. All Manuals Search And Download.

(3) No Key display

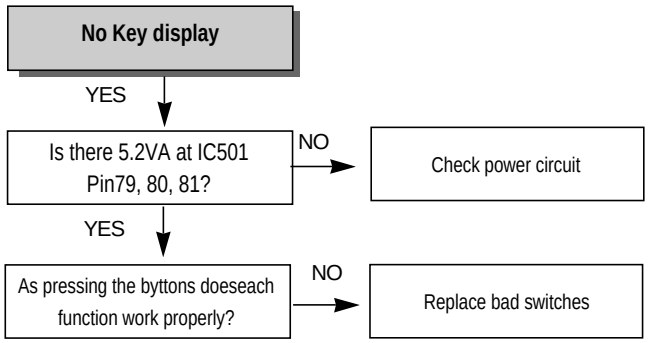

6. OSD CIRCUIT

(1) No OSD display.

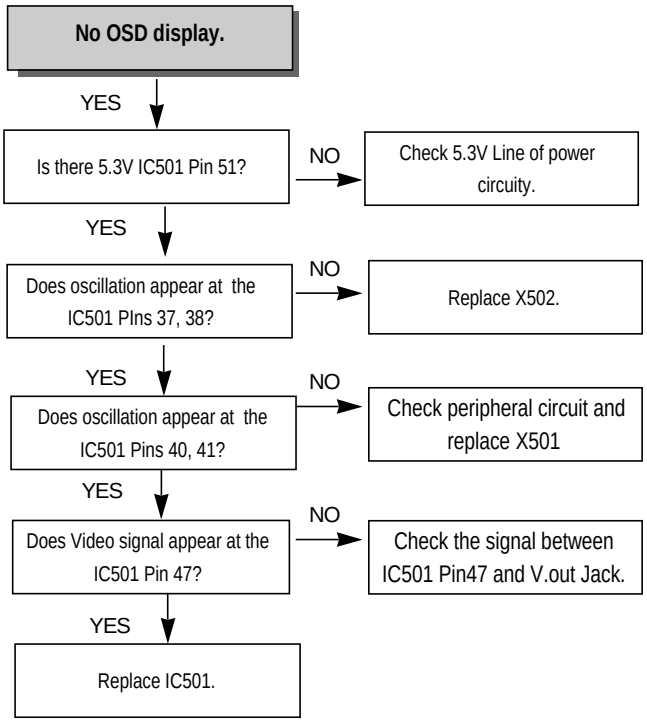

(2) No F.OSD display.

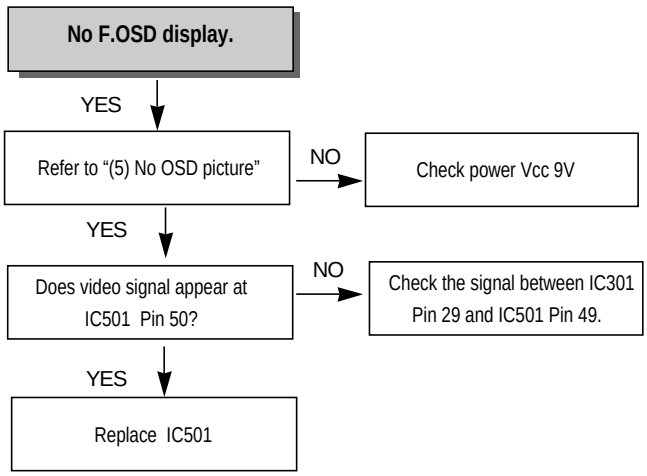

Download from Www.Somanuals.com. All Manuals Search And Download.

1. OVERALL WIRING DIAGRAM

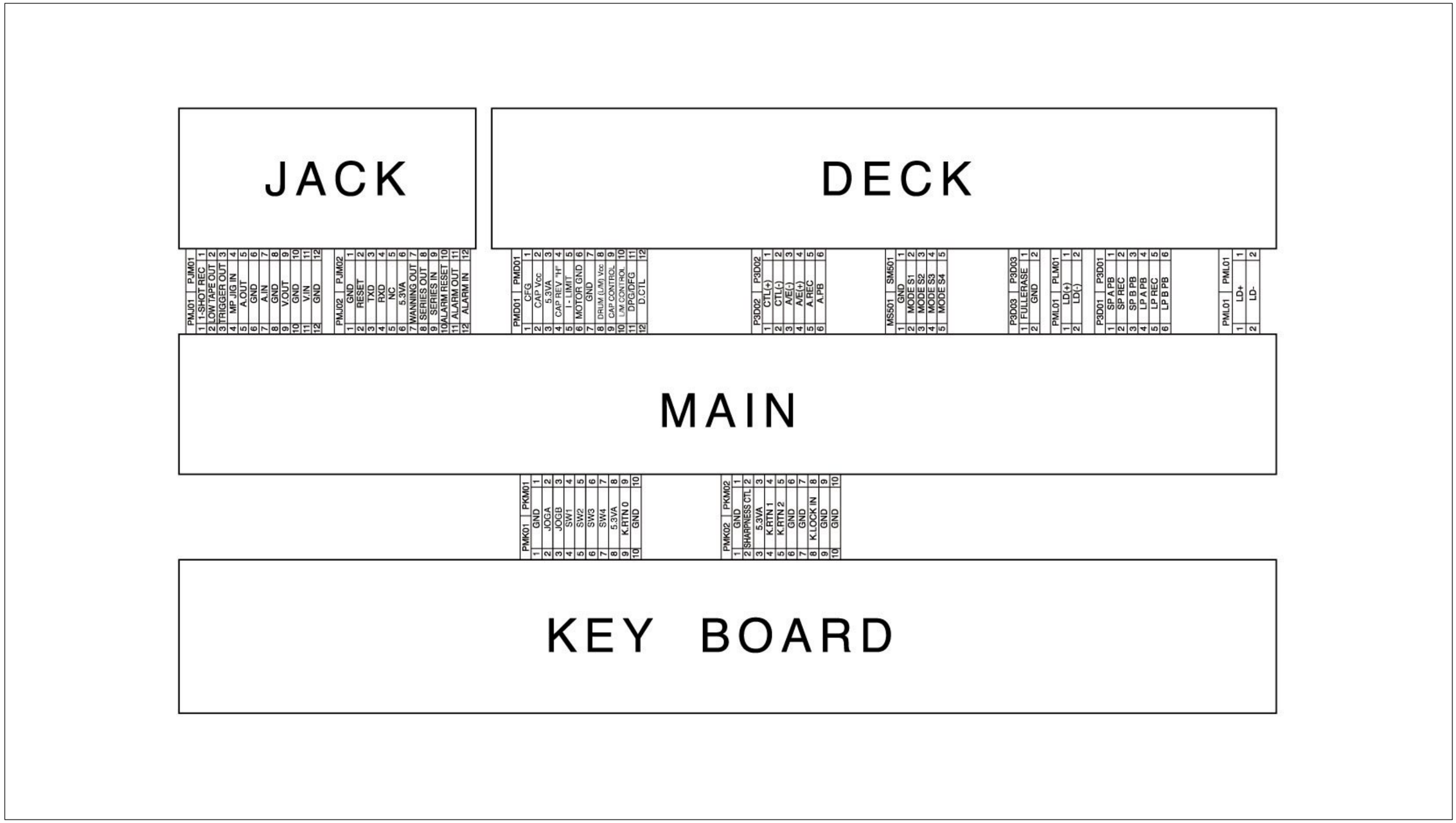

Download from Www.Somanuals.com. All Manuals Search And Download.

2. POWER BLOCK DIAGRAM

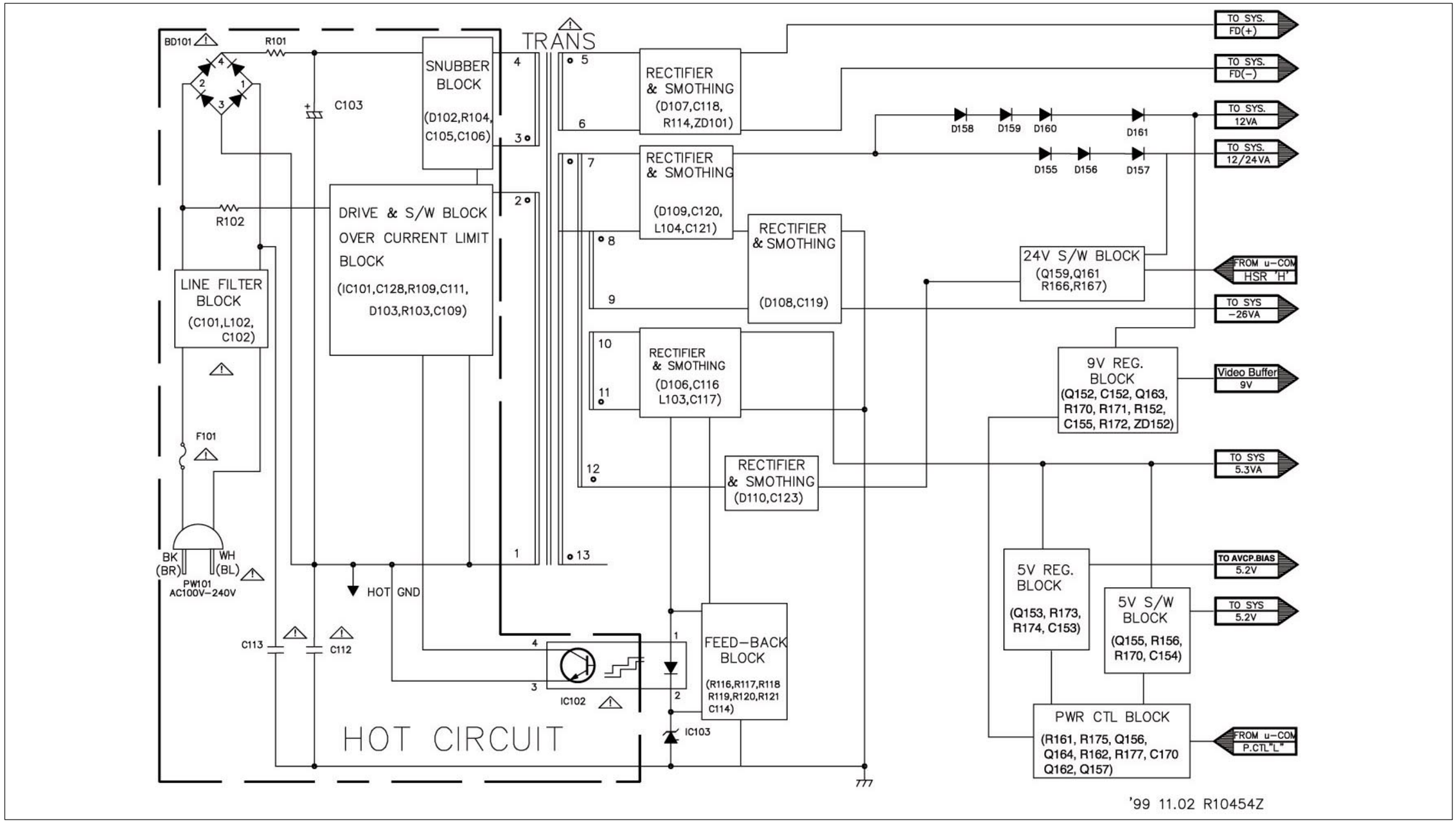

Download from Www.Somanuals.com. All Manuals Search And Download.

3. POWER CLRCUIT DIAGRAM

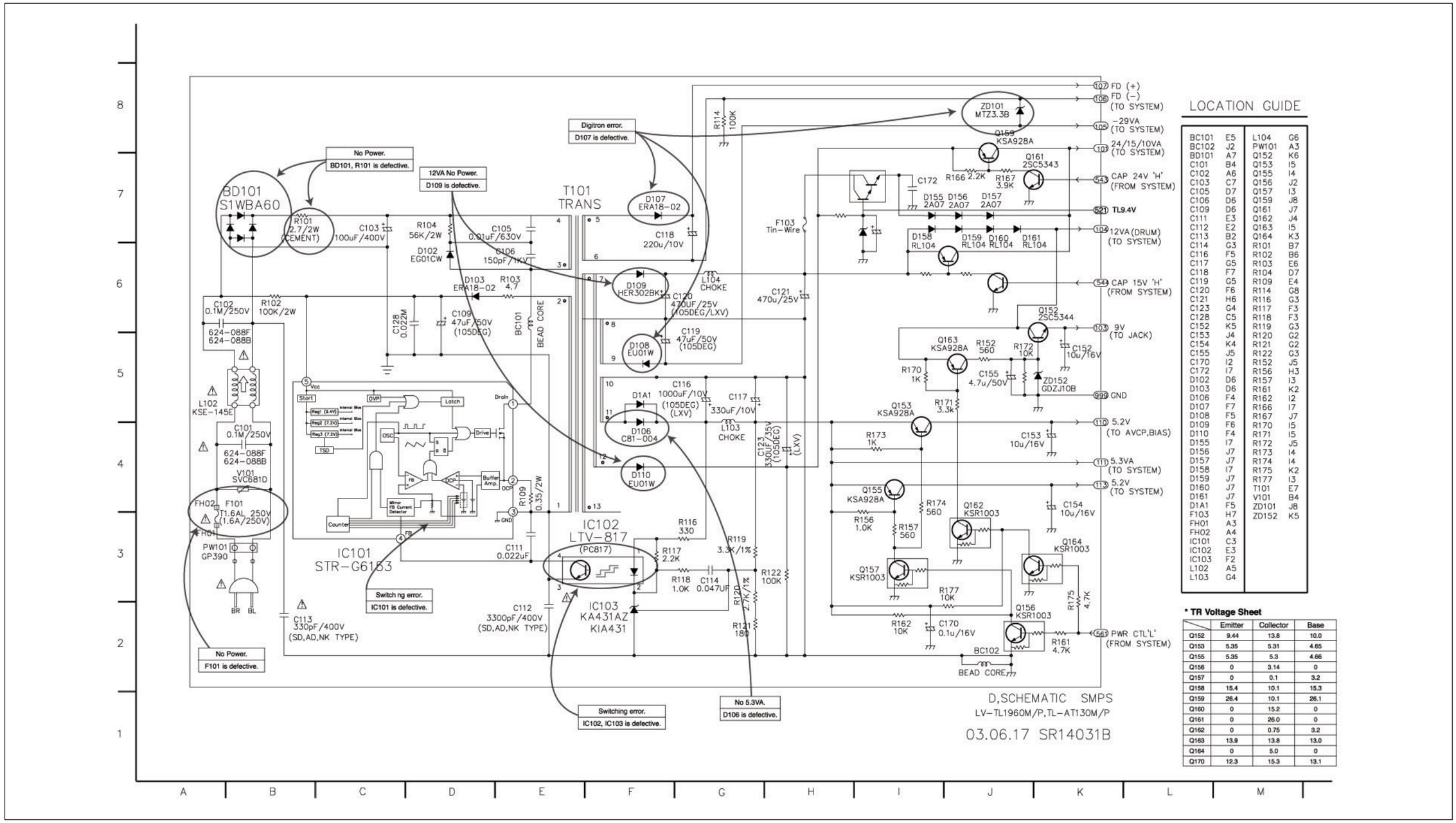

LOCATION GUIDE

BC101	E5	L104	G6
BC102	J2	PW101	A3
BD101	A7	Q152	K6
C101	B4	Q153	I5
C102	A6	Q155	I4
C103	C7	Q156	J2
C105	D7	Q157	I3
C106	D6	Q159	J8
C109	D6	Q161	J7
C111	E3	Q162	J4
C112	E2	Q163	I5
C113	B2	Q164	K3
C114	G3	R101	B7
C116	F5	R102	B6
C117	G5	R103	E6
C118	F7	R104	D7
C119	G5	R109	E4
C120	F6	R114	G8
C121	H6	R116	G3
C123	G4	R117	F3
C128	C5	R118	F3
C152	K5	R119	G3
C153	J4	R120	G2
C154	K4	R121	G2
C155	J5	R122	G3
C170	I2	R152	J5
C172	I7	R156	H3
D102	D6	R157	I3
D103	D6	R161	K2
D106	F4	R162	I2
D107	F7	R166	I7
D108	F5	R167	J7
D109	F6	R170	I5
D110	F4	R171	I5
D155	I7	R172	J5
D156	J7	R173	I4
D157	J7	R174	I4
D158	I7	R175	K2
D159	J7	R177	I3
D160	J7	T101	E7
D161	J7	V101	B4
D1A1	F5	ZD101	J8
F103	H7	ZD152	K5
FH01	A3		
FH02	A4		
IC101	C3		
IC102	E3		
IC103	F2		
L102	A5		
L103	G4		

*** TR Voltage Sheet**

	Emitter	Collector	Base
Q152	9.44	13.8	10.0
Q153	5.35	5.31	4.65
Q155	5.35	5.3	4.66
Q156	0	3.14	0
Q157	0	0.1	3.2
Q158	15.4	10.1	15.3
Q159	26.4	10.1	26.1
Q160	0	15.2	0
Q161	0	26.0	0
Q162	0	0.75	3.2
Q163	13.9	13.8	13.0
Q164	0	5.0	0
Q170	12.3	15.3	13.1

Download from Www.Somanuals.com. All Manuals Search And Download.

4. AUDIO BLOCK DIAGRAM

1) PB Mode

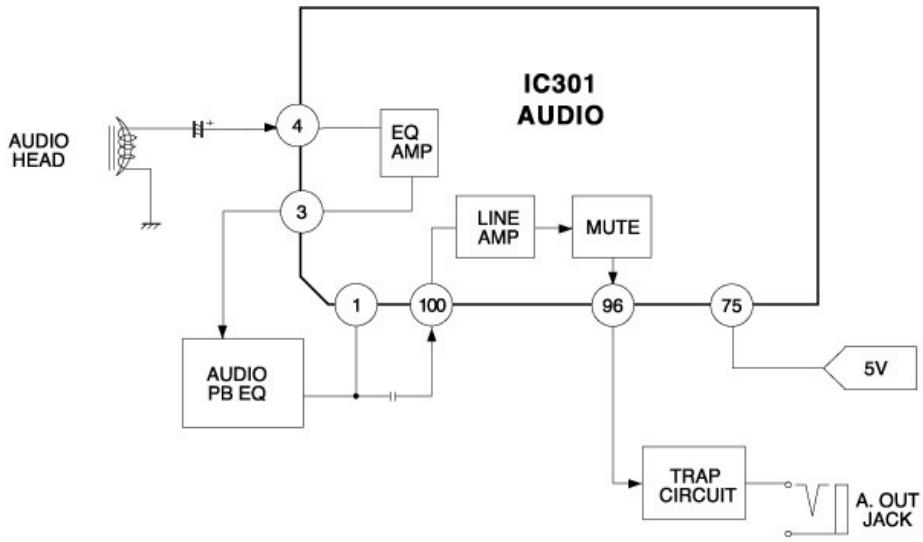

2) REC Mode

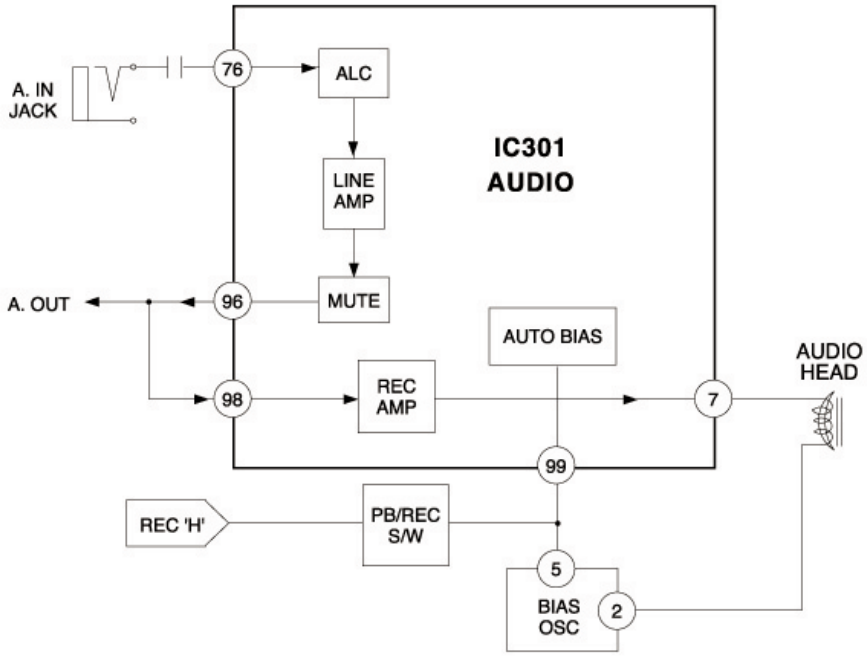

Download from Www.Somanuals.com. All Manuals Search And Download.

5. Y/C BLOCK DIAGRAM

1) PB Mode

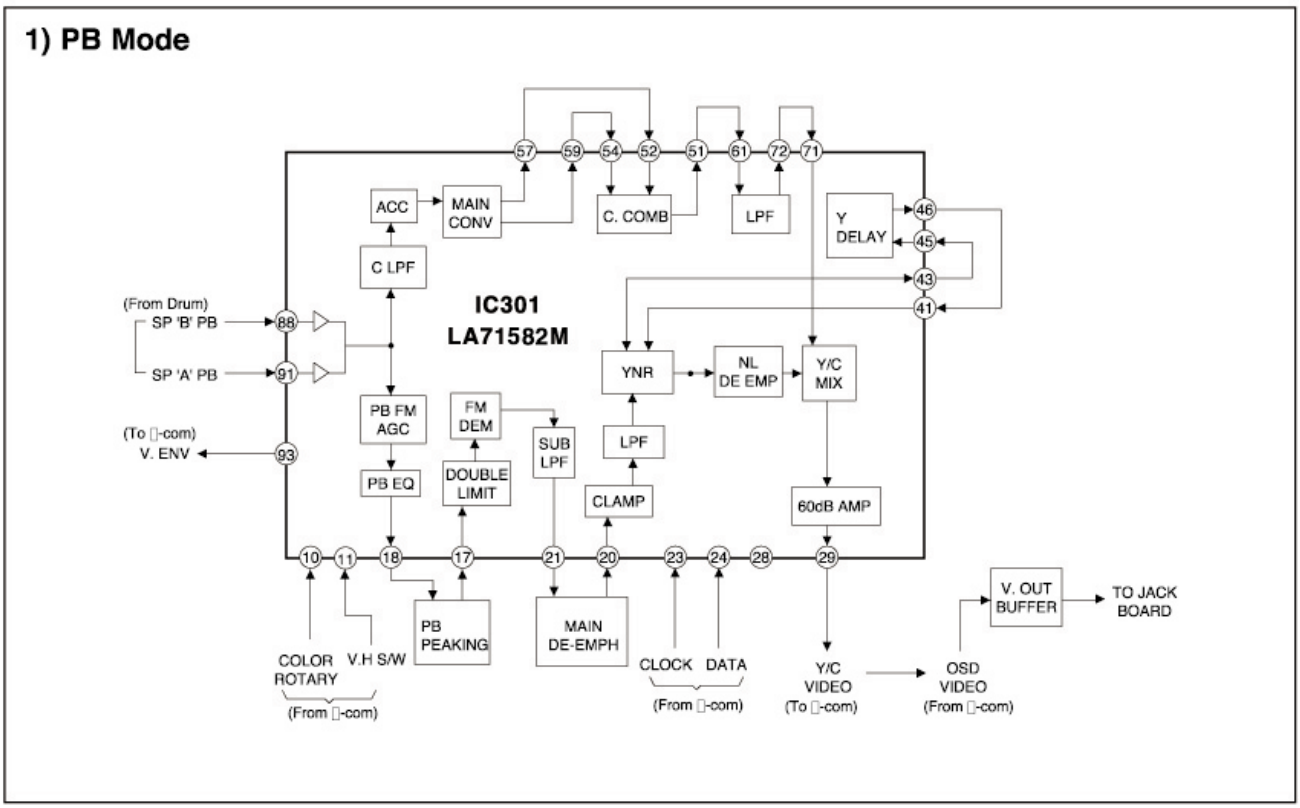

2) REC Mode

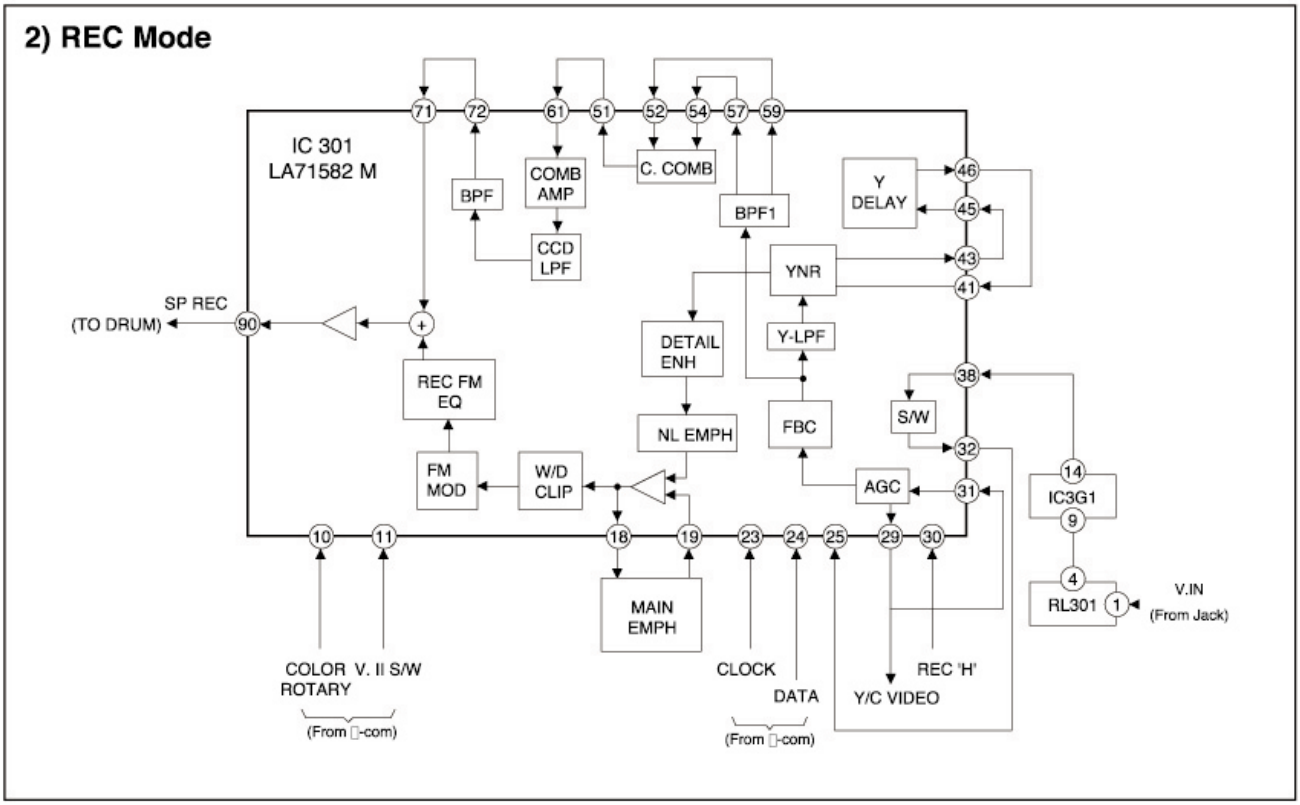

Download from Www.Somanuals.com. All Manuals Search And Download.

6. A/V CIRCUIT DIAGRAM

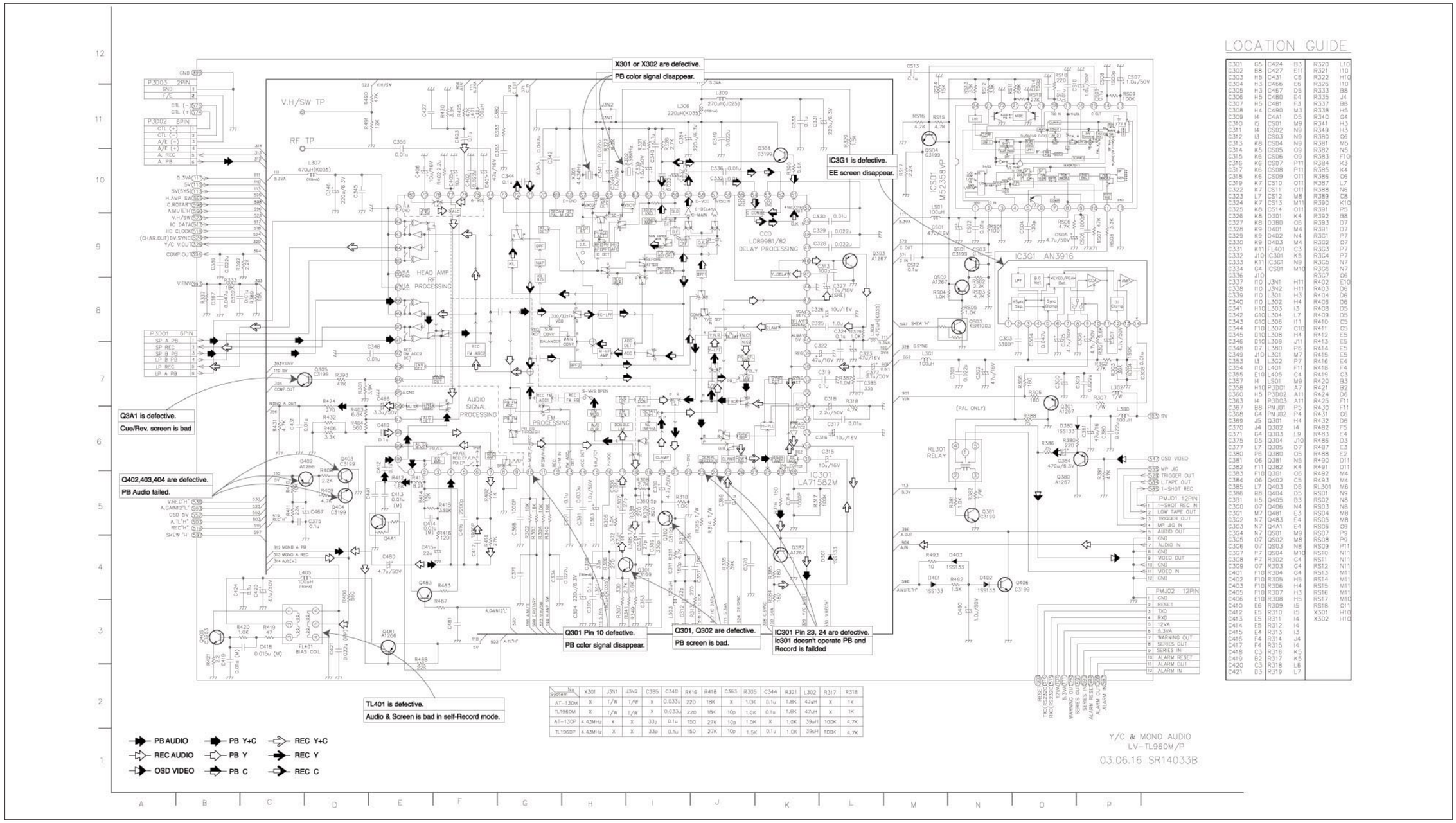

	X301	J3N1	J3N2	C385	C342	R416	R418	C363	R305	C344	R321	L302	R317	R318
AT-130M	X	T/W	T/W	X	0.033u	220	18K	X	1.0K	0.1u	1.8K	47uH	X	1K
TL960M	X	T/W	T/W	X	0.033u	220	18K	10p	1.0K	0.1u	1.8K	47uH	X	1K
AT-130P	4.43MHz	X	X	33p	0.1u	150	27K	10p	1.5K	X	1.0K	39uH	100K	4.7K
TL960P	4.43MHz	X	X	33p	0.1u	150	27K	10p	1.5K	0.1u	1.0K	39uH	100K	4.7K

Download from Www.Somanuals.com. All Manuals Search And Download.

• WAVEFORM & VOLTAGE SHEET

* IC301 Oscilloscope Waveform

① 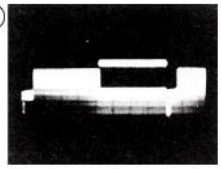

IC301 Pin ⑳
PB mode
500mvp-p

② 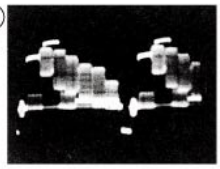

IC301 Pins ㊳ ,㉜ , ㉛
Video in
1Vp-p

③

IC301 Pin ㉘
PB/REC mode
4.2Vp-p

④ 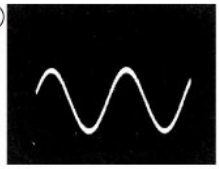

IC301 Pin ⑦
REC mode
1.4Vp-p

⑤ 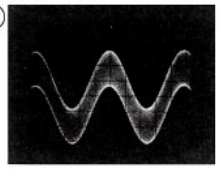

IC301 Pin ⑥
REC mode
2.2Vp-p

⑥ 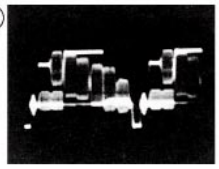

IC301 Pin ㉙
PB mode
2.1Vp-p

⑦

IC301 Pin ㊶
PB mode
400mVp-p

⑧ 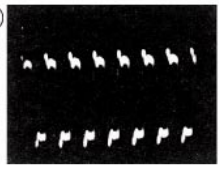

IC301 Pin ⑥④
PB mode
600mVp-p

⑨ 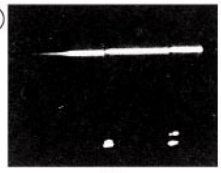

IC301 Pin ㉓
PB/REC mode
5Vp-p

⑩

IC301 Pin ㉔
PB/REC mode
5Vp-p

⑪ 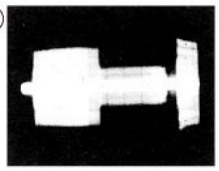

IC301 Pins ⑦① , ⑦②
REC mode
340mVp-p

⑫ 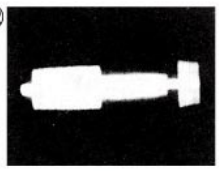

IC301 Pins ⑤① ⑤② ⑤④
PB mode
300mVp-p

⑬ 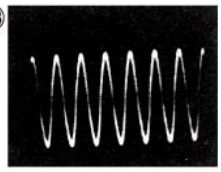

IC301 Pin ⑥③
PB mode
600mVp-p

⑭ 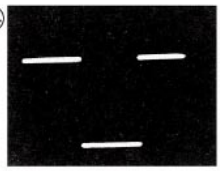

IC301 Pin ⑪
PB mode
3.2Vp-p

⑮ 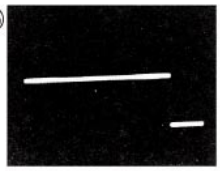

IC301 Pin ⑩
PB mode
1.8Vp-p

⑯ 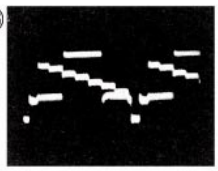

IC301 Pin ④③
PB mode
400mVp-p

*** TR Voltage Sheet**

	Emitter	Collector	Base
Q301	1.54	4.15	2.18
Q302	1.8	5.07	2.42
Q303	1.95	0	1.34
Q304	1.2	5.0	1.7
Q382	1.6	0	0.93
Q3A1	0.7	5.2	1.25
Q3A2	0	0	5.04
Q380	2.59	0	1.89
Q381	0	0.1	0.8
Q3G1	2.29	0	1.6
Q402	5.2	27.9	5.3
Q403	-21.1	0	-28.3
Q404	-21.1	0	-28.8
Q405	0.2	3.48	0.48
Q406	0	0	0.13
Q4A1	0	0	0
Q481	5.23	3.76	4.40
Q483	2.4	2.5	5.2

*** IC3G1 Voltage Sheet**

PIN No.	PB	REC
1	0.0	0.0
2	3.7	3.2
3	5.1	5.1
4	2.0	2.0
5	1.4	1.4
6	1.2	1.1
7	2.9	2.9
8	0	0.0
9	2.9	2.9
10	5.0	5.0
11	2.7	2.7
12	3.0	3.0
13	3.0	3.0
14	1.6	1.6

IC301 Voltage Sheet

PIN	PB	REC	PIN	PB	REC	PIN	PB	REC	PIN	PB	REC	PIN	PB	REC
1	2.44	2.41	21	2.15	2.54	41	3.02	2.9	61	3.36	3.43	81	0.0	0.0
2	2.44	2.41	22	0.0	0.0	42	2.79	3.1	62	3.47	3.45	82	0.01	0.01
3	2.47	2.52	23	4.85	4.85	43	1.96	2.11	63	3.83	3.72	83	0.01	0.01
4	2.45	2.39	24	4.85	4.85	44	0.17	0.17	64	2.63	2.72	84	0.76	0.69
5	0.05	2.4	25	0.0	0.0	45	1.53	2.26	65	2.06	1.35	85	0.76	0.69
6	2.47	2.42	26	0.07	0.07	46	1.64	1.5	66	2.63	2.75	86	0.0	0.0
7	2.47	2.42	27	0.34	0.34	47	9.59	9.53	67	3.9	3.72	87	4.97	4.99
8	0.0	0.0	28	0.34	0.34	48	2.21	2.33	68	0.0	0.0	88	1.89	4.84
9	0.0	0.0	29	1.73	1.94	49	0.88	0.89	69	0.63	0.6	89	0.0	0.0
10	0.97	0.97	30	1.09	4.35	50	0.0	0.0	70	1.98	2.83	90	1.89	0.0
11	1.7	1.7	31	2.88	2.88	51	1.94	1.9	71	2.5	2.43	91	1.89	4.84
12	5.05	2.69	32	1.5	2.27	52	2.59	2.59	72	3.26	3.02	92	0.21	0.23
13	1.5	1.42	33	1.87	1.31	53	0.0	0.0	73	3.4	3.36	93	4.23	0.02
14	1.9	1.53	34	1.82	3.31	54	2.62	2.58	74	1.8	0.01	94	0.01	0.25
15	2.3	2.31	35	1.26	3.36	55	5.07	5.01	75	4.99	4.95	95	0.0	0.0
16	5.07	5.02	36	1.82	3.31	56	0.22	0.53	76	2.44	2.44	96	2.26	2.26
17	3.03	0.17	37	1.61	4.73	57	3.38	3.43	77	0.01	0.01	97	0.0	0.0
18	1.87	2.47	38	2.14	2.24	58	5.01	4.98	78	2.44	2.44	98	2.44	1.62
19	1.12	2.47	39	4.05	4.06	59	3.3	3.36	79	2.47	2.44	99	4.97	4.11
20	2.98	3.04	40	5.08	5.02	60	3.46	3.43	80	2.38	1.92	100	2.44	3.26

Download from Www.Somanuals.com. All Manuals Search And Download.

7. SYSTEM BLOCK DIAGRAM

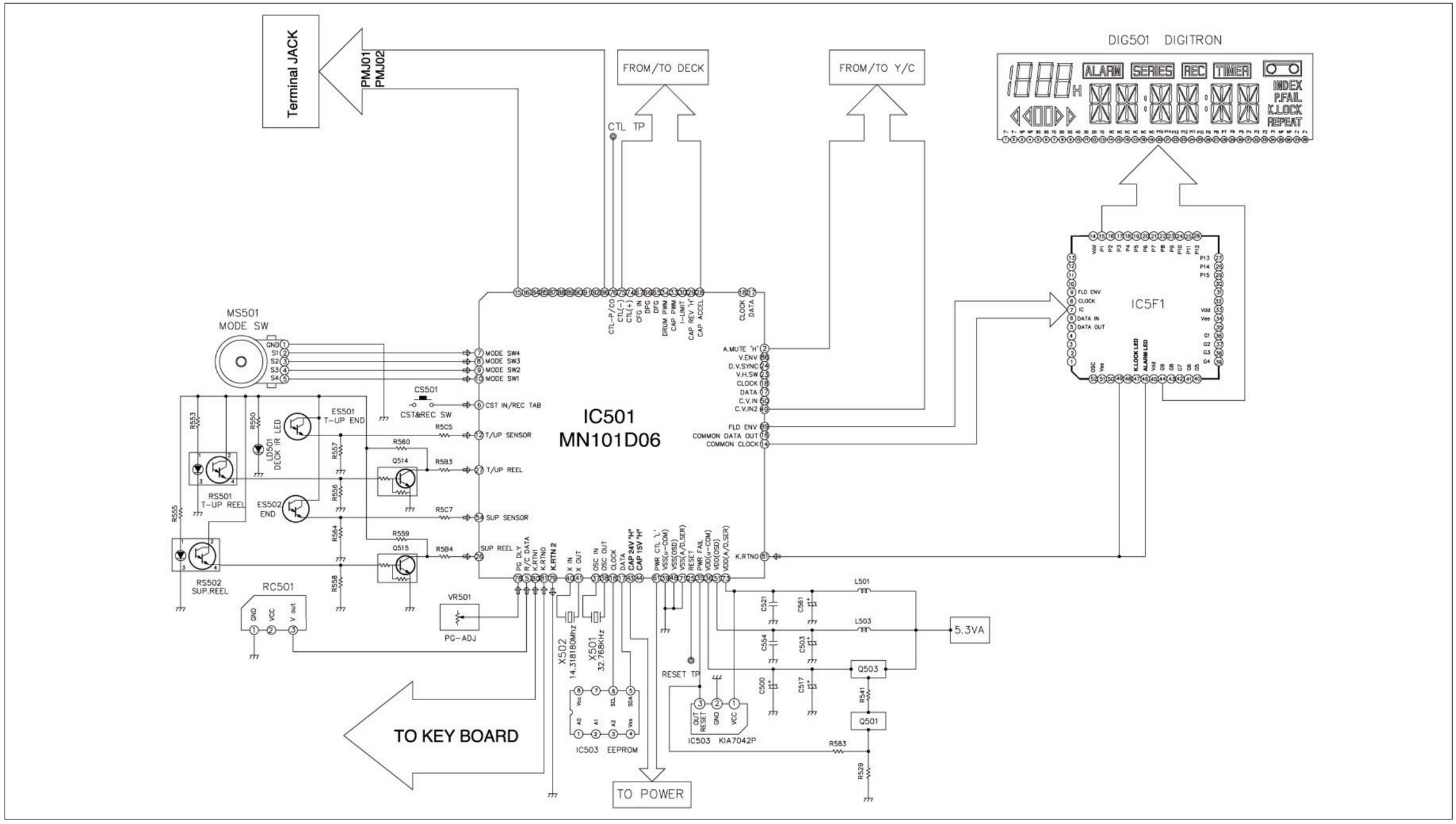

Download from Www.Somanuals.com. All Manuals Search And Download.

• WAVEFORM & VOLTAGE SHEET

* IC501 Oscilloscope Waveform

①
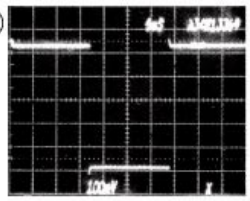

IC501 Pin ㉓
100mV/5mS
REC/PB modes
(V.H/SW)

②
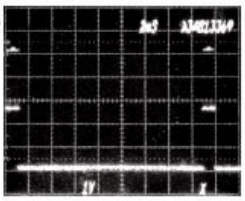

IC501 Pin ㉔
1V/2mS
QUE/REV modes
(D.V-SYNC)

③
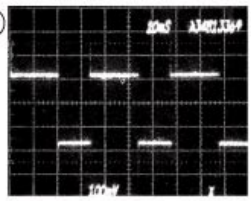

IC501 Pin ㉔
100mV/10mS
REC mode
(CTL+)

④
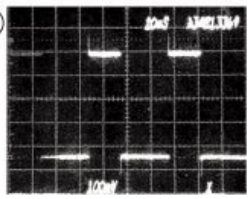

IC501 Pin ㉕
100mV/10mS
REC mode
(CTL-)

⑤
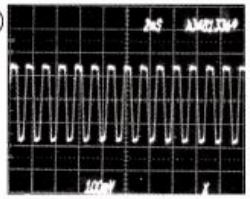

IC501 Pin ㉕
100mV/2mS
REC/PB modes
(DFG)

⑥
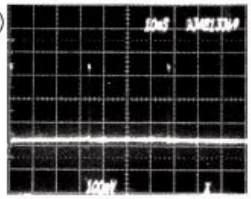

IC501 Pin ㉖
100mV/10μs
REC/PB modes
(DPG)

⑦
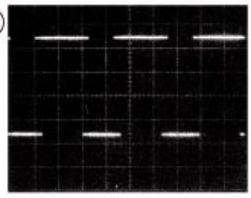

IC501 Pin ㉗
100mV/500μS
REC/PB modes
(CFG)

⑧
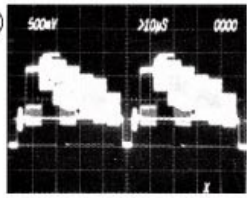

IC501 Pin ㊾
500mV/10μS
EE/PB modes
(CV IN)

⑨
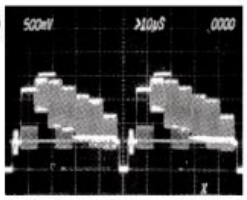

IC501 Pin ㊼
500mV/10μS
REC/PB modes
(CV OUT)

* TR Voltage Sheet

	Emitter	Collector	Base
Q501	0	0	0.67
Q502	0	0.0	0.27
Q503	5.3	5.3	4.63
Q504	1.55	0	0
Q506	1.6	0	0.93
Q510	0	0	5.3
Q511	0	0	5.3
Q512	0	5.29	0.0
Q513	5.32	030	5.29
Q514	0.3	Pulse	Pulse
Q515	0.3	Pulse	Pulse
Q521	5.0	5.3	8.7
Q522	0	5	0

* IC502 Voltage Sheet

PIN No.	PB	REC
1	0.0	0.0
2	0.3	0.3
3	0.8	0.8
4	2.9	2.9
5	2.2	2.2
6	2.2	2.2
7	12.5	12.5
8	12.5	12.5
9	0.8	0.8
10	0.3	0.3

* IC503 Voltage Sheet

PIN No.	PB	REC
1	0	0
2	0	0
3	0	0
4	0	0
5	5.2	5.2
6	5.2	5.2
7	0	0
8	5.2	5.2

* IC505 Voltage Sheet

PIN No.	PB	REC
1	5.2	5.2
2	0	0
3	4.8	4.8

IC5F1 Voltage Sheet

PIN	PB	REC	PIN	PB	REC	PIN	PB	REC	PIN	PB	REC	PIN	PB	REC
1	2.3	3.04	12	3.1	3.14	23	-28.8	-29.2	34	-29.4	0.0	45	5.3	5.3
2	1.9	2.5	13	3.1	3.15	24	15.8	-29.3	35	-9.9	0.0	46	5.2	5.3
3	3.0	0.0	14	5.3	5.35	25	15.8	-19.4	36	-26.0	-26.6	47	0.0	0.0
4	3.1	1.15	15	-21.8	-22.3	26	22.9	-12.9	37	-25.6	-26.6	48	0.0	0.0
5	3.1	3.14	16	0.0	-29.3	27	0.0	-26.3	38	-25.2	-26.6	49	0.0	0.0
6	6.0	0.0	17	-19.1	0.0	28	0.0	-29.6	39	0.0	-26.6	50	0.0	0.0
7	7.3	5.34	18	-19.0	0.0	29	-29.1	-29.7	40	-26.6	-26.6	51	0.0	0.0
8	5.2	5.26	19	0.0	0.0	30	-29.1	-29.7	41	-26.6	-26.6	52	3.1	3.4
9	5.0	5.03	20	0.0	0.0	31	-16.3	-17.7	42	-26.6	-26.6			
10	3.1	3.15	21	0.0	0.0	32	-16.4	-17.0	43	-26.6	-26.6			
11	3.1	3.7	22	0.0	-26.0	33	5.3	0.0	44	-26.6	-26.6			

Download from Www.Somanuals.com. All Manuals Search And Download.

8. SYSTEM CLRCUIT DIAGRAM

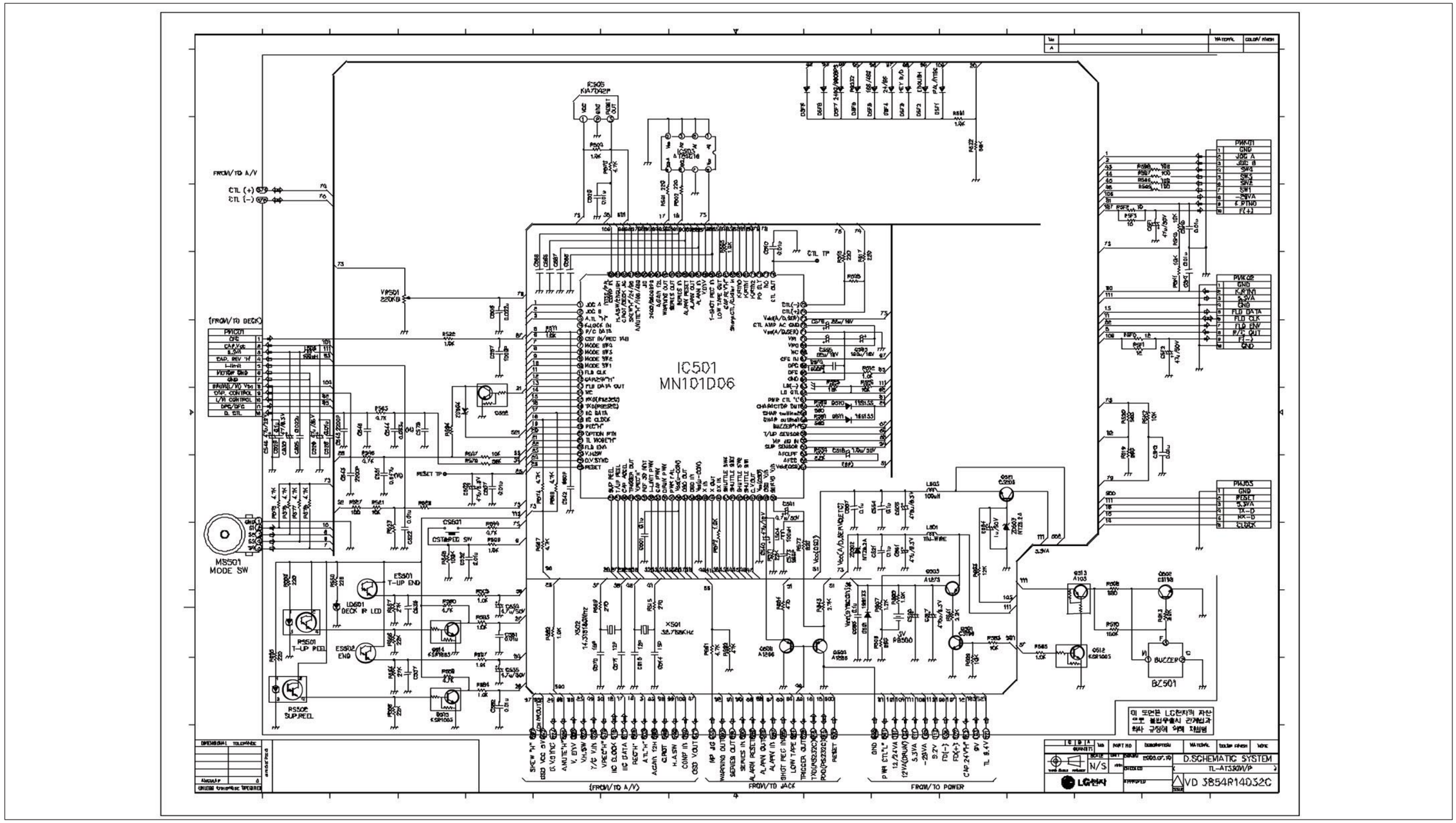

Download from Www.Somanuals.com. All Manuals Search And Download.

9. JACK CLRCUIT DIAGRAM

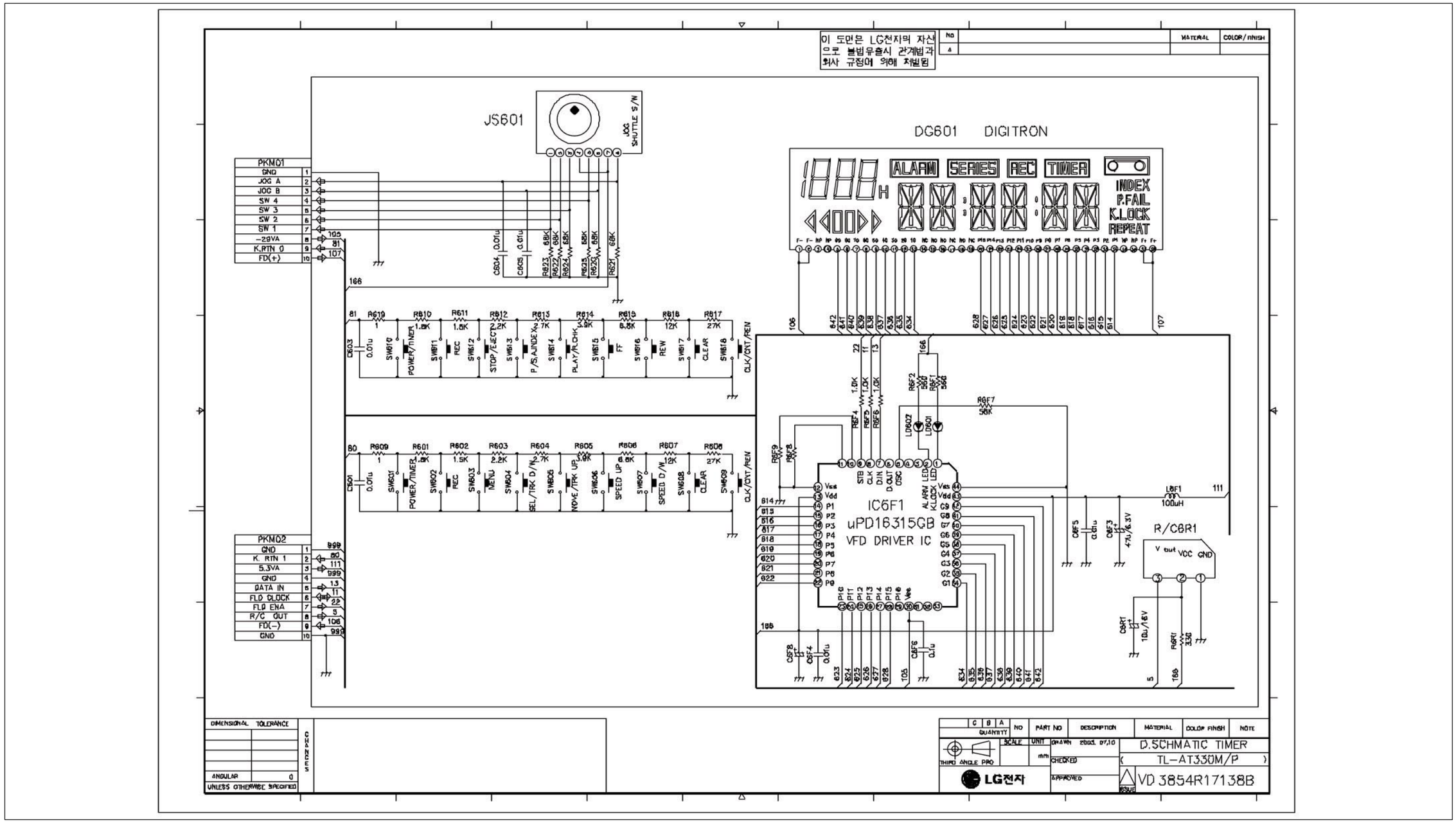

Download from Www.Somanuals.com. All Manuals Search And Download.

10. KEY-BOARD CLRCUIT DIAGRAM

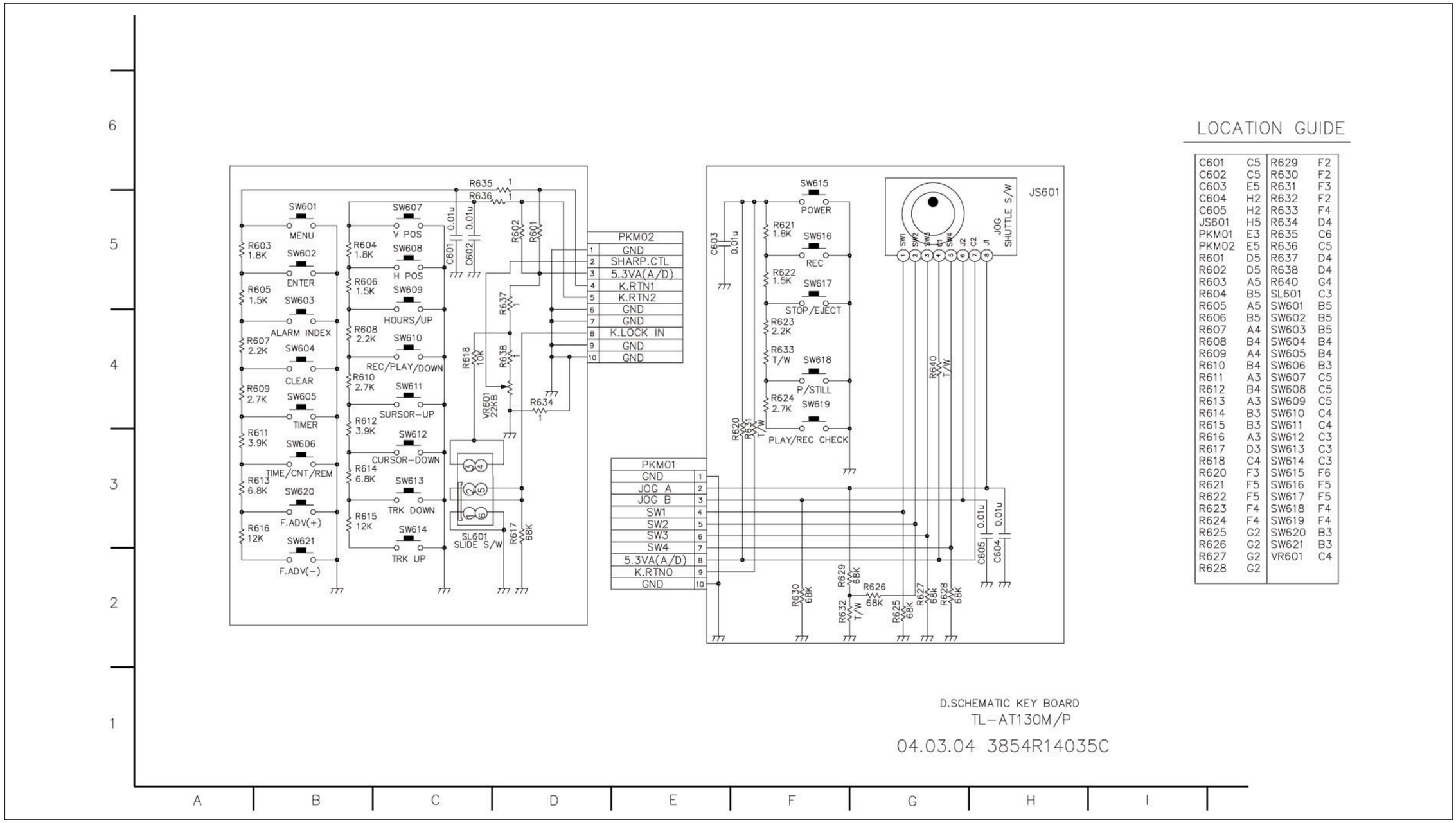

LOCATION GUIDE

C601	C5	R629	F2
C602	C5	R630	F2
C603	E5	R631	F3
C604	H2	R632	F2
C605	H2	R633	F4
JS601	H5	R634	D4
PKM01	E3	R635	C6
PKM02	E5	R636	C5
R601	D5	R637	D4
R602	D5	R638	D4
R603	A5	R640	G4
R604	B5	SL601	C3
R605	A5	SW601	B5
R606	B5	SW602	B5
R607	A4	SW603	B5
R608	B4	SW604	B4
R609	A4	SW605	B4
R610	B4	SW606	B3
R611	A3	SW607	C5
R612	B4	SW608	C5
R613	A3	SW609	C5
R614	B3	SW610	C4
R615	B3	SW611	C4
R616	A3	SW612	C3
R617	D3	SW613	C3
R618	C4	SW614	C3
R620	F3	SW615	F6
R621	F5	SW616	F5
R622	F5	SW617	F5
R623	F4	SW618	F4
R624	F4	SW619	F4
R625	G2	SW620	B3
R626	G2	SW621	B3
R627	G2	VR601	C4
R628	G2		

Download from Www.Somanuals.com. All Manuals Search And Download.

SECTION3 ELECTRICAL PRINTED CIRCUIT DIAGRAMS

1. MAIN P.C.BOARD

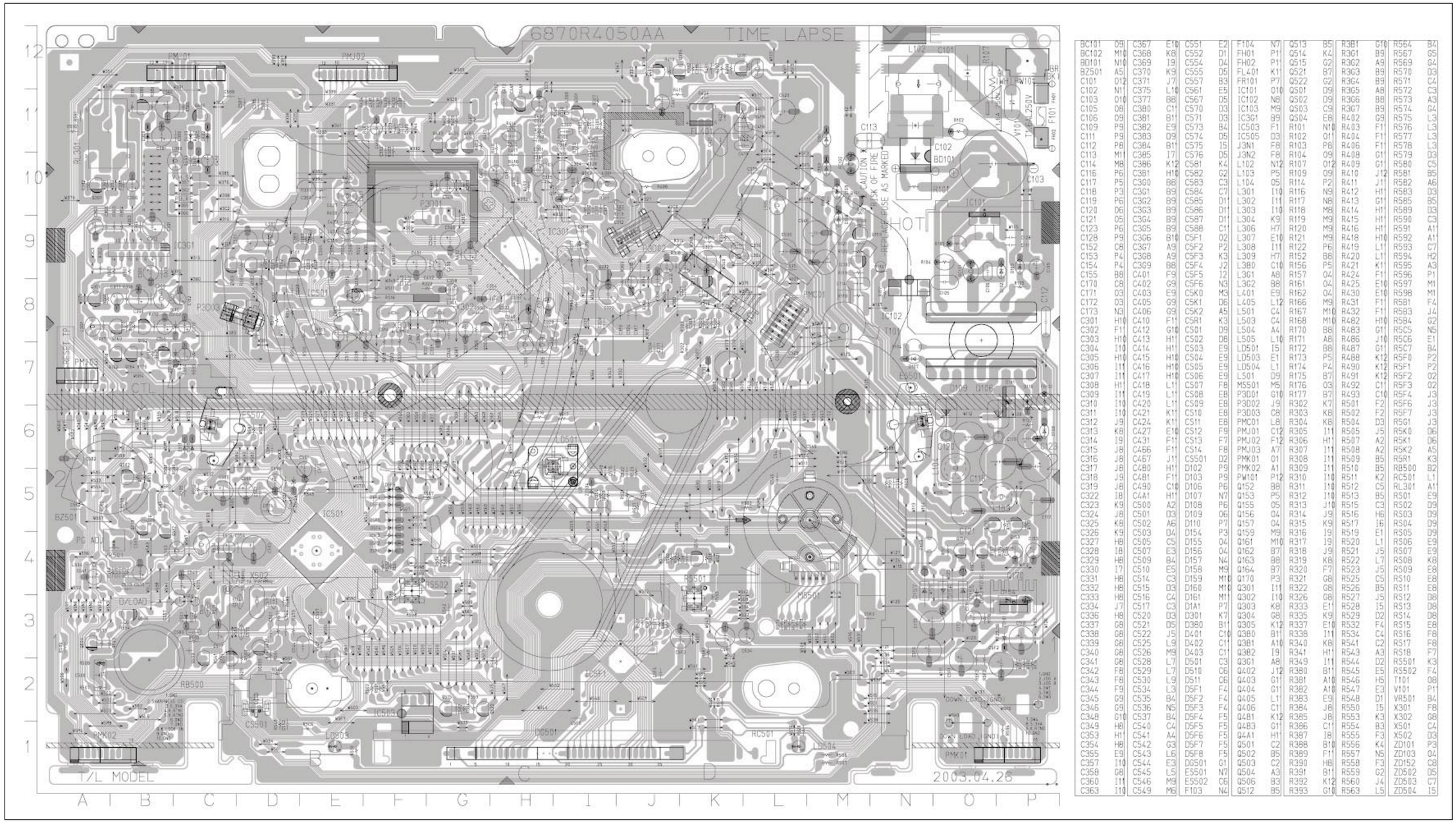

BC101	O9	C367	E10	C551	E2	F104	N7	Q513	B5	R381	G10	R564	B4
BC102	M10	C368	K8	C552	D1	FH01	P11	Q514	K4	R361	B9	R567	G5
BD101	N10	C369	I9	C554	D4	FH02	P11	Q515	G2	R362	A9	R569	G4
BZ501	A5	C370	K9	C555	D5	FL401	K11	Q521	B7	R363	B9	R570	D3
C101	O12	C371	J7	C557	B3	FR101	P7	Q522	G2	R364	B9	R571	C4
C102	N11	C375	L10	C561	E5	IC101	O10	QS01	D9	R365	A8	R572	C3
C103	O10	C377	B8	C567	D5	IC102	N8	QS02	D9	R366	B8	R573	A3
C105	O8	C380	C11	C570	D3	IC103	M9	QS03	C9	R367	B9	R574	G4
C106	O9	C381	B11	C571	D3	IC301	B9	QS04	E8	R402	G9	R575	L3
C109	P9	C382	E9	C573	B4	IC503	F1	R101	N10	R403	F1	R576	L3
C111	P9	C383	D9	C574	D5	IC505	D3	R102	O11	R404	F1	R577	L3
C112	P8	C384	B11	C575	I5	J3N1	F8	R103	P8	R406	F1	R578	L3
C113	M11	C385	I7	C576	D5	J3N2	F8	R104	O9	R408	G1	R579	D3
C114	M8	C386	K12	C581	K4	L102	N12	R107	O12	R409	G1	R580	C5
C116	P6	C387	H10	C582	G2	L103	P5	R109	O9	R410	J12	R581	B5
C117	P5	C300	B8	C583	C3	L104	O5	R114	P2	R411	J1	R582	A6
C118	P3	C301	B9	C584	C7	L301	I10	R116	N9	R412	H1	R583	D3
C119	P6	C302	B9	C585	D11	L302	I11	R117	N8	R413	G1	R585	B5
C120	O6	C303	B9	C586	D11	L303	I10	R118	M8	R414	H1	R589	D3
C121	O5	C304	B9	C587	D11	L304	K9	R119	M9	R415	H1	R590	C3
C123	P6	C305	B9	C588	C11	L306	H7	R120	M9	R416	H1	R591	A1
C128	P9	C306	B10	C5F1	O2	L307	E10	R121	M9	R418	H10	R592	A1
C152	C8	C307	A9	C5F2	P2	L308	I11	R122	P6	R419	L1	R593	C7
C153	P4	C308	A9	C5F3	K3	L309	H7	R152	B8	R420	L1	R594	H2
C154	P4	C309	B8	C5F4	J2	L380	C10	R156	P5	R421	K1	R595	A3
C155	B8	C401	F9	C5F5	I2	L301	A8	R157	O4	R424	F1	R596	P1
C170	C8	C402	G9	C5F6	N3	L302	B8	R161	O4	R425	E10	R597	M1
C171	O3	C403	E9	C5K0	M3	L401	E9	R162	O4	R430	E10	R598	M1
C172	O3	C405	G9	C5K1	D6	L405	L12	R166	M9	R431	F1	R581	F4
C173	N3	C406	G9	C5K2	A5	L501	C4	R167	M10	R432	F1	R583	J4
C301	H10	C410	F11	C5R1	K3	L503	C4	R168	M10	R482	H10	R584	G2
C302	F11	C412	G10	CS01	D9	L504	A4	R170	B8	R483	G1	RSC5	N5
C303	H10	C413	H1	CS02	D8	L505	L10	R171	A8	R486	J10	RSC6	E1
C304	I10	C414	H1	CS03	E9	LD501	I5	R172	B8	R487	G1	RSC7	B4
C305	H10	C415	H10	CS04	E9	LD503	E1	R173	P5	R488	K12	RSF0	P2
C306	I11	C416	H10	CS05	E9	LD504	L1	R174	P4	R490	K12	RSF1	P2
C307	I11	C417	H10	CS06	E9	L501	D9	R175	B7	R491	K12	RSF2	O2
C308	H1	C418	L11	CS07	F8	MS501	M5	R176	O3	R492	C1	RSF3	O2
C309	I11	C419	L11	CS08	E8	P3D01	G10	R177	B7	R493	C10	RSF4	J3
C310	I10	C420	L11	CS09	E8	P3D02	J9	R302	K7	R501	F2	RSF6	J3
C311	I10	C421	K11	CS10	E8	P3D03	C8	R303	K8	R502	F2	RSF7	J3
C312	J9	C424	K11	CS11	E8	PMC01	L8	R304	K8	R504	D3	RSG1	J3
C313	K8	C427	E10	CS12	F9	PMJ01	C12	R305	I11	R505	J5	RSK0	D6
C314	I9	C431	F11	CS13	F7	PMJ02	F12	R306	H1	R507	A2	RSK1	D6
C315	J8	C466	F11	CS14	F8	PMJ03	A7	R307	I11	R508	A2	RSK2	A5
C316	J8	C467	J11	CS501	D2	PMK01	O1	R308	I11	R509	B5	RSR1	K3
C317	J8	C480	H1	D102	P9	PMK02	A1	R309	I11	R510	B5	RB500	B2
C318	J9	C481	F11	D103	P9	PW101	P12	R310	I10	R511	K2	RC501	L1
C319	J8	C490	C10	D106	P6	Q152	B8	R311	I10	R512	C5	RL301	A1
C322	I8	C4A1	H1	D107	N7	Q153	P5	R312	I10	R513	B5	RS01	E9
C323	K9	C500	A2	D108	P6	Q155	O5	R313	J10	R515	C3	RS02	D9
C324	J8	C501	D3	D109	O6	Q156	O4	R314	J9	R516	H6	RS03	D9
C325	K8	C502	A6	D110	P7	Q157	O4	R315	K9	R517	I6	RS04	D9
C326	K9	C503	D4	D154	P3	Q159	M9	R316	I9	R519	E1	RS05	D9
C327	H8	C505	C5	D155	O4	Q161	M10	R317	I9	R520	L1	RS06	E9
C328	I8	C507	E3	D156	O4	Q162	B7	R318	J9	R521	J5	RS07	E9
C329	H8	C509	B4	D157	N4	Q163	B8	R319	K8	R522	L7	RS08	K8
C330	I7	C510	E5	D158	M9	Q164	B7	R320	F7	R523	J5	RS09	E8
C331	H8	C514	C3	D159	M10	Q170	P3	R321	G8	R525	C5	RS10	E8
C332	H8	C515	D3	D160	M10	Q301	I11	R322	G8	R526	B5	RS11	E8
C333	H8	C516	C4	D161	M11	Q302	I10	R326	G8	R527	J5	RS12	D8
C334	J7	C517	C3	D1A1	P7	Q303	K8	R333	E11	R528	I5	RS13	D8
C336	H8	C520	D3	D301	K7	Q304	G8	R335	K9	R529	D2	RS14	D8
C337	G8	C521	D5	D380	B11	Q305	K12	R337	E10	R532	F4	RS15	E8
C338	G8	C522	J5	D401	C10	Q380	B11	R338	I11	R534	C4	RS16	F8
C339	G8	C525	L9	D402	C11	Q381	A10	R340	K8	R541	C2	RS17	F8
C340	G8	C526	M9	D403	C11	Q382	I9	R341	H11	R543	A3	RS18	F7
C341	G8	C528	L7	D501	C3	Q301	A8	R349	I11	R544	D2	RS501	K3
C342	F8	C529	L7	D510	C6	Q402	J12	R380	B11	R545	E5	RS502	F4
C343	F8	C530	L9	D511	C6	Q403	G11	R381	A10	R546	H5	T101	O8
C344	F9	C534	L3	D5F1	F4	Q404	G11	R382	A10	R547	E3	V101	P11
C345	G9	C535	B4	D5F2	F4	Q405	L11	R383	E9	R548	D1	VR501	B4
C346	G9	C536	N5	D5F3	F4	Q406	C11	R384	J8	R550	I5	X301	F8
C348	G10	C537	B4	D5F4	F5	Q4B1	K12	R385	J8	R553	K3	X302	G8
C349	H8	C540	C4	D5F5	F5	Q4B3	G11	R386	C1	R554	B3	X501	C4
C353	H1	C541	A4	D5F6	F5	Q4A1	H11	R387	I8	R555	F3	X502	D3
C354	H8	C542	G3	D5F7	F5	QS01	C2	R388	B10	R556	K4	ZD101	P3
C355	E9	C543	L6	D5F8	F5	QS02	B5	R389	F11	R557	N5	ZD103	O4
C357	I10	C544	E3	DGS01	G1	QS03	C2	R390	H8	R558	F3	ZD152	C8
C358	G8	C545	L5	ES501	N7	QS04	A3	R391	B11	R559	G2	ZD502	D5
C360	I11	C546	M9	ES502	C6	QS06	B3	R392	K12	R560	J4	ZD503	C7
C363	I10	C549	M6	F103	N4	QS12	B5	R393	G10	R563	L5	ZD504	I5

Download from Www.Somanuals.com. All Manuals Search And Download.

SECTION3 ELECTRICAL PRINTED CIRCUIT DIAGRAMS

2. KEY 1 P.C.BOARD

3. KEY 2 P.C.BOARD

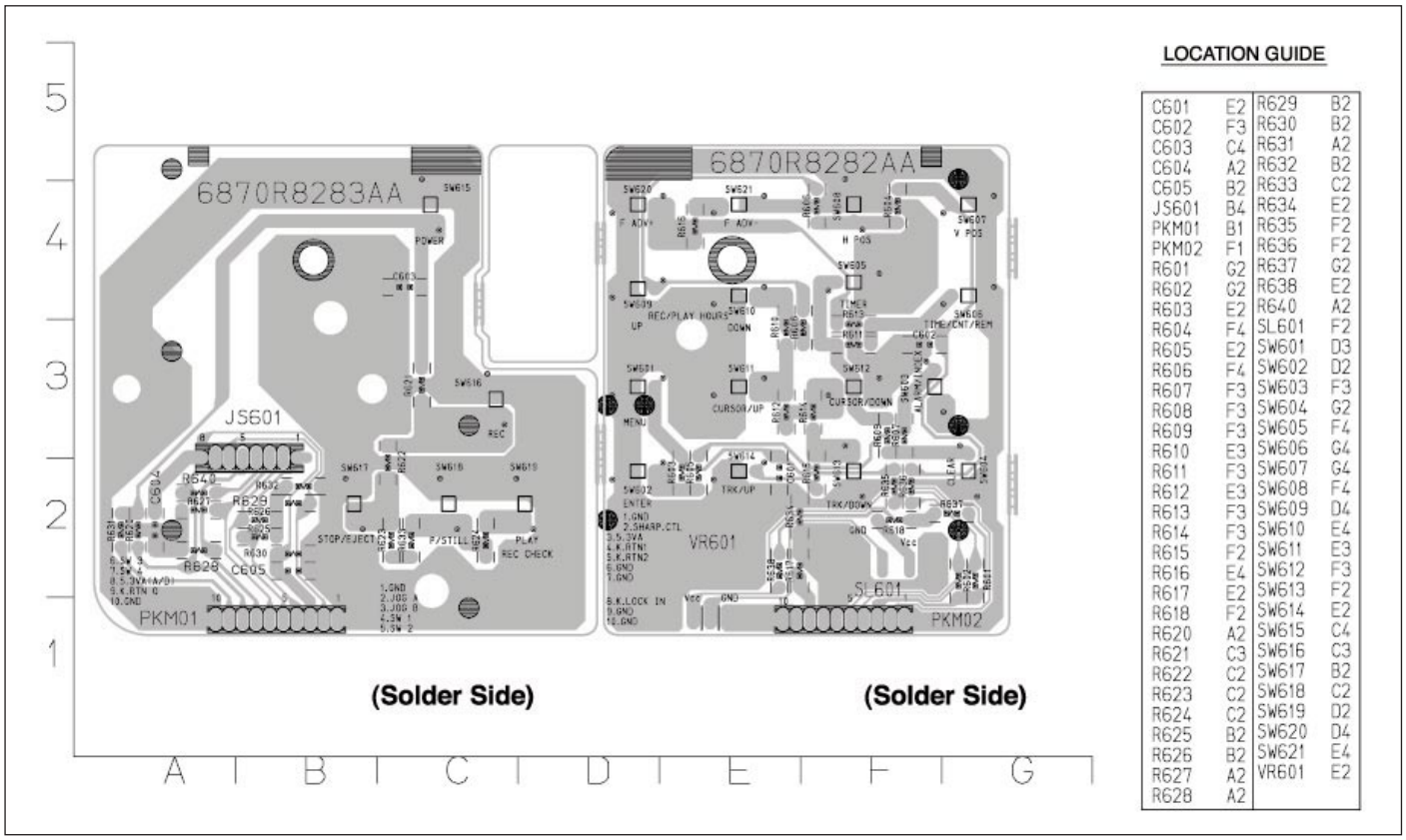

LOCATION GUIDE

C601	E2	R629	B2
C602	F3	R630	B2
C603	C4	R631	A2
C604	A2	R632	B2
C605	B2	R633	C2
JS601	B4	R634	E2
PKM01	B1	R635	F2
PKM02	F1	R636	F2
R601	G2	R637	G2
R602	G2	R638	E2
R603	E2	R640	A2
R604	F4	SL601	F2
R605	E2	SW601	D3
R606	F4	SW602	D2
R607	F3	SW603	F3
R608	F3	SW604	G2
R609	F3	SW605	F4
R610	E3	SW606	G4
R611	F3	SW607	G4
R612	E3	SW608	F4
R613	F3	SW609	D4
R614	F3	SW610	E4
R615	F2	SW611	E3
R616	E4	SW612	F3
R617	E2	SW613	F2
R618	F2	SW614	E2
R620	A2	SW615	C4
R621	C3	SW616	C3
R622	C2	SW617	B2
R623	C2	SW618	C2
R624	C2	SW619	D2
R625	B2	SW620	D4
R626	B2	SW621	E4
R627	A2	VR601	E2
R628	A2		

PRINTED CIRCUIT BOARD DIAGRAMS

4. JACK P.C.BOARD

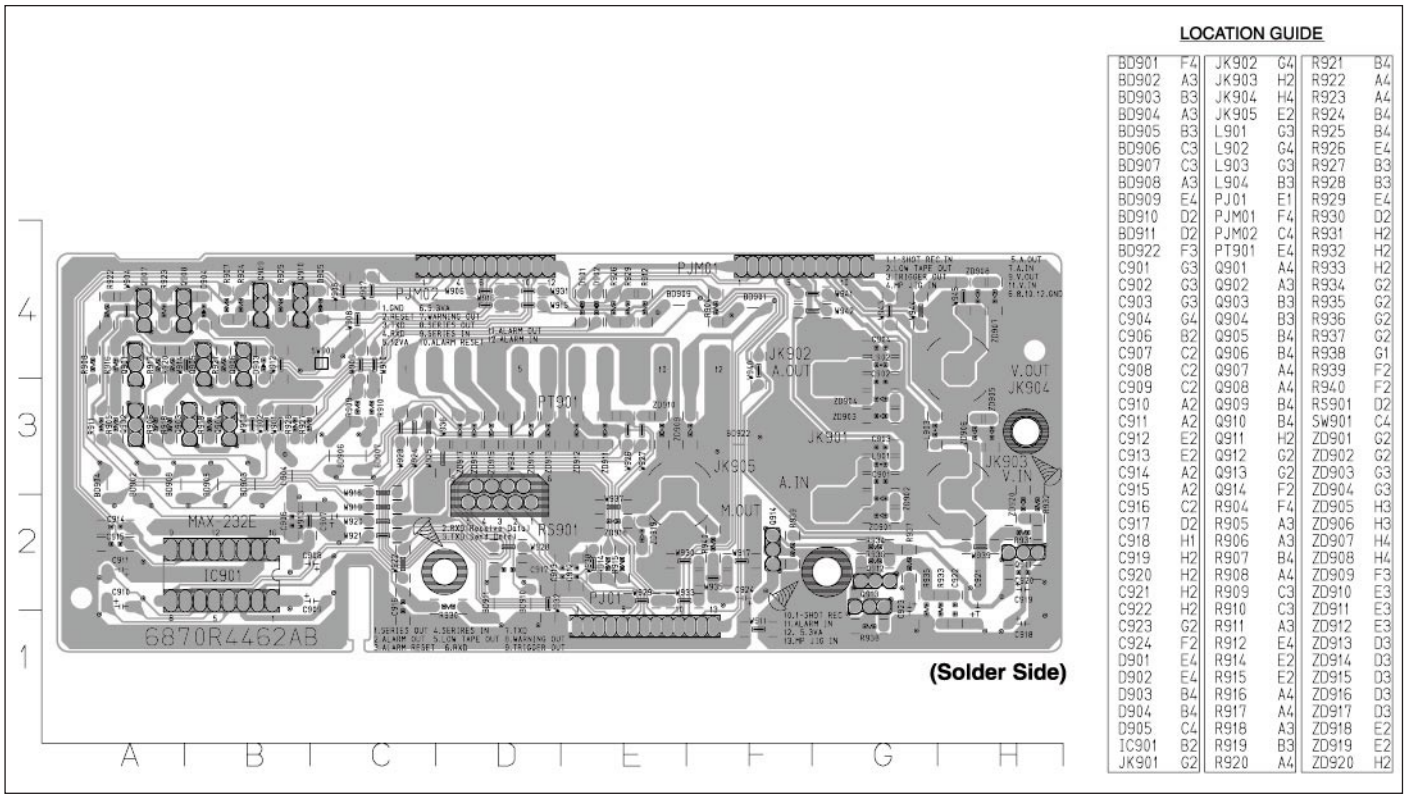

LOCATION GUIDE

BD901	F4	JK902	G4	R921	B4
BD902	A3	JK903	H2	R922	A4
BD903	B3	JK904	H4	R923	A4
BD904	A3	JK905	E2	R924	B4
BD905	B3	L901	G3	R925	B4
BD906	C3	L902	G4	R926	E4
BD907	C3	L903	G3	R927	B3
BD908	A3	L904	B3	R928	B3
BD909	E4	PJ01	E1	R929	E4
BD910	D2	PJM01	F4	R930	D2
BD911	D2	PJM02	C4	R931	H2
BD922	F3	PT901	E4	R932	H2
C901	G3	Q901	A4	R933	H2
C902	G3	Q902	A3	R934	G2
C903	G3	Q903	B3	R935	G2
C904	G4	Q904	B3	R936	G2
C906	B2	Q905	B4	R937	G2
C907	C2	Q906	B4	R938	G1
C908	C2	Q907	A4	R939	F2
C909	C2	Q908	A4	R940	F2
C910	A2	Q909	B4	RS901	D2
C911	A2	Q910	B4	SW901	C4
C912	E2	Q911	H2	ZD901	G2
C913	E2	Q912	G2	ZD902	G2
C914	A2	Q913	G2	ZD903	G3
C915	A2	Q914	F2	ZD904	G3
C916	C2	R904	F4	ZD905	H3
C917	D2	R905	A3	ZD906	H3
C918	H1	R906	A3	ZD907	H4
C919	H2	R907	B4	ZD908	H4
C920	H2	R908	A4	ZD909	F3
C921	H2	R909	C3	ZD910	E3
C922	H2	R910	C3	ZD911	E3
C923	G2	R911	A3	ZD912	E3
C924	F2	R912	E4	ZD913	D3
D901	E4	R914	E2	ZD914	D3
D902	E4	R915	E2	ZD915	D3
D903	B4	R916	A4	ZD916	D3
D904	B4	R917	A4	ZD917	D3
D905	C4	R918	A3	ZD918	E2
IC901	B2	R919	B3	ZD919	E2
JK901	G2	R920	A4	ZD920	H2

Download from Www.Somanuals.com. All Manuals Search And Download.

SECTION 4 MECHANISM
CONTENTS

DECK MECHANISM PARTS LOCATIONS

- **Top View.....4-1**
- **Bottom View 4-1**

DECK MECHANISM DISASSEMBLY

1. Drum Assembly 4-2
2. Plate Top 4-4
3. Holder Assembly CST 4-4
4. Opener Door 4-4
5. Bracket Assembly L/D Motor.....4-4
6. Gear Assembly Rack F/L 4-4
7. Arm Assembly F/L 4-4
8. Lever Assembly S/W 4-4
9. Arm Assembly Cleaner.....4-5
10. Head F/E 4-5
11. Base Assembly A/C Head 4-5
12. Brake Assembly T 4-6
13. Brake Assembly RS 4-6
14. Arm Assembly Tension.....4-6
15. Reel S / Reel T.....4-6
16. Base Assembly P4 4-7
17. Opener Lid 4-7
18. Arm Assembly Pinch 4-7
19. Lever T/up / Arm T/up 4-7
20. Belt Capstan/Motor Capstan.....4-8
21. Lever F/R 4-8
22. Clutch Assembly D35 4-8
23. Brake Assembly Capstan 4-8
24. Gear Drive/Gear Cam 4-9
25. Gear Sector.....4-9
26. Plate Slider.....4-9
27. Lever Tension.....4-9
28. Lever Spring.....4-9
29. Gear Assembly P2/ Gear Assembly P3 4-10
30. Base Assembly P2/ Base Assembly P3 4-10
31. Base Loading 4-11
32. Base Tension.....4-11
33. Arm Assembly Idler 4-11

DECK MECHANISM ADJUSTMENT

- **Tools and Fixtures for Service 4-12**

1. Mechanism Alignment Position Check....4-13
2. Preparation for Adjustment.....4-14
3. Checking Torque 4-14
4. Guide Roller Height Adjustment.....4-15
   - 4-1. Preliminary Adjustment 4-15
   - 4-2. Precise Adjustment 4-15
5. Audio/Control (A/C) Head Adjustment 4-16
   - 5-1. Preliminary Adjustment 4-16
   - 5-2. Confirmation of Tape Path between Pinch Roller and Take-up Guide.....4-17
   - 5-3. Precise Adjustment(Azimuth Adjustment) 4-17
6. X-Value Adjustment.....4-17
7. Adjustment after Replacing Drum Assembly (Video Heads) 4-18
8. Check the Tape Travel after Reassembling Deck Mechanism.....4-18
   - 8-1. Checking Audio and RF Locking Time during Playback after CUE or REV 4-18
   - 8-2. Checking for Tape Curling or Jamming 4-18

MAINTENANCE/INSPECTION PROCEDURE

1. Check before starting Repairs 4-19
2. Required Maintenance 4-20
3. Scheduled Maintenance.....4-20
4. Supplies Required for Inspection and Maintenance.....4-20
5. Maintenance Procedure 4-20
   - 5-1. Cleaning.....4-20
   - 5-2. Greasing 4-21

MECHANISM TROUBLESHOOTING GUIDE

1. Deck Mechanism.....4-23
2. Front Loading Mechanism.....4-26

EXPLODED VIEWS

1. Front Loading Mechanism Section 4-28
2. Moving Mechanism Section (1).....4-29
3. Moving Mechanism Section (2).....4-30

Download from Www.Somanuals.com. All Manuals Search And Download.

DECK MECHANISM PARTS LOCATIONS

• Top View

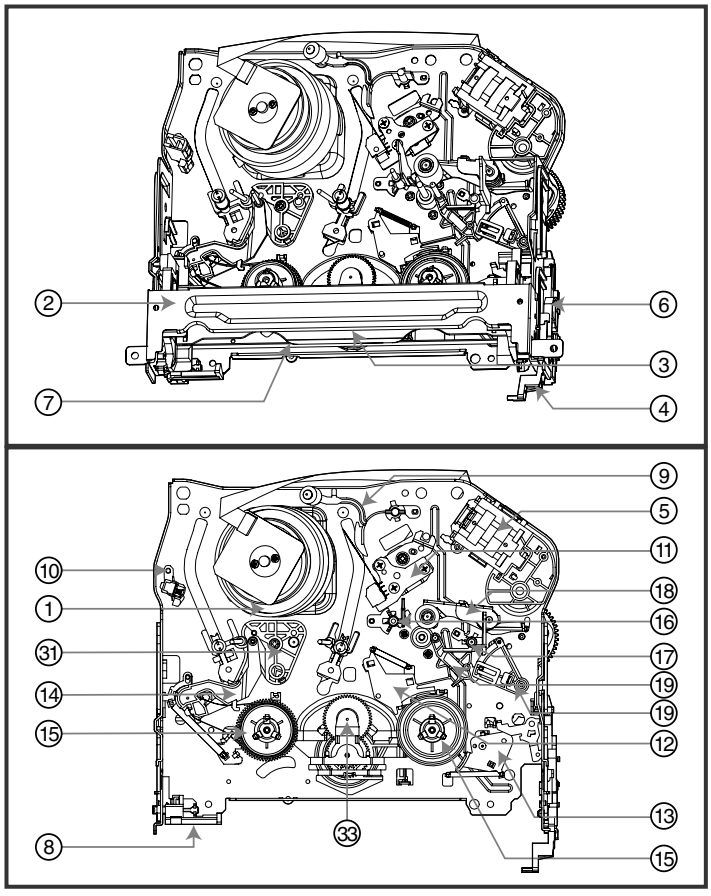

• Bottom View

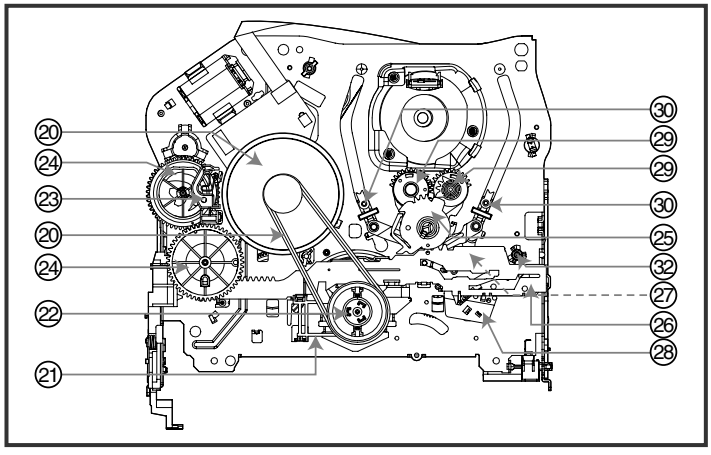

NOTE : When reassembly perform the procedure in the reverse order.

1) When reassembling, confirm Mechanism and Mode Switch Alignment Position (Refer to Page 4-13)
2) When disassembling, the Parts for Starting No. Should be removed first.

Starting No. \ Procedure		Part	Fixing Type	Figure	View
	1	Drum Assembly	3 Screw	A-1	T
	2	Plate Top	2 Hook	A-2	T
2	3	Holder Assembly CST	Chassis Hole	A-2	T
2	4	Opener Door	Chassis Hole	A-2	T
	5	Bracket Assembly L/D Motor	3 Hook	A-2	T
2,3,4	6	Gear Assembly Rack F/L	1 Hook, Chassis Hole	A-2	T
2,3,4,6	7	Arm Assembly F/L	Chassis Hole	A-2	T
	8	Lever Assembly S/W	1 Hook	A-2	T
	9	Arm Assembly Cleaner	Chassis Embossing	A-3	T
	10	Head F/E	Chassis Embossing	A-3	T
	11	Base Assembly A/C Head	1 Screw	A-3	T
2,3	12	Brake Assembly T	1 Hook	A-4	T
2,3	13	Brake Assembly RS	1 Hook	A-4	T
2,3	14	Arm Assembly Tension	2 Hook	A-4	T
2,3,12,13, 14	15	Reel S/Reel T		A-4	T
	16	Base Assembly P4	Chassis Embossing	A-5	T
	17	Opener Lid	Chassis Embossing	A-5	T
17	18	Arm Assembly Pinch	Shaft	A-5	T
17	19	Lever T/Up / Arm T/Up	1 Hook	A-5	T
17,18	20	Belt Capstan/Motor Capstan	3 Screw	A-6	B
	21	Lever F/R	Locking Tab	A-6	B
20, 21	22	Clutch Assembly D35	Washer	A-6	B
	23	Brake Assembly Capstan	Locking Tab	A-6	B
	24	Gear Drive/Gear Cam	Washer/Hook	A-7	B
	25	Gear Sector	1 Hook	A-7	B
20,21,23, 24,25	26	Plate Slider	Shaft Guide	A-7	B
20,21,23, 24,25,26	27	Lever Tension	1 Hook	A-7	B
2,3,14,20, 21,25,23, 24,26	28	Lever Spring	Locking Tab	A7	B
25	29	Gear Assembly P2/Gear Assembly P3	Boss	A-8	B
2,3,14,25, 29	30	Base Assembly P2/Base Assembly P3	Chassis Slot	A-8	B
2,3,14,25, 29	31	Base Loading	1 Screw	A-9	T
2,3,14	32	Base Tension	Chassis Embossing	A-9	B
2,3,20,21, 22	33	Arm Assembly Idler	Locking Tab	A-9	T

T:Top, B:Bottom

Download from Www.Somanuals.com. All Manuals Search And Download.

DECK MECHANISM DISASSEMBLY

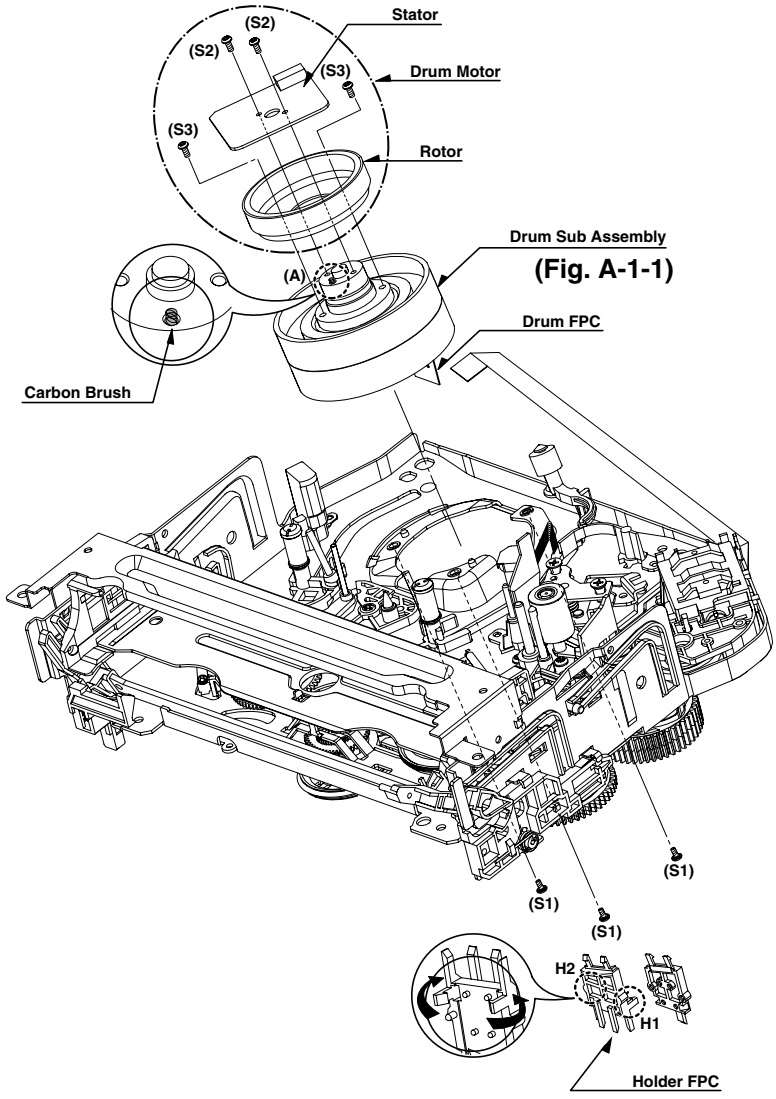

Fig. A-1

1. Drum Assembly (Fig. A-1-1)

1) Unplug the Drum FPC Connector.
2) Remove three Screws(S1) on bottom side and separate the Drum assembly.
3) Unhook (H1), (H2) and separate the Holder FPC and Cap FPC.

1-1. Drum Motor

1) Remove two Screws(S2) and disassemble the Stator of the Drum Motor.
2) Remove two Screws(S3) and separate the Rotor of the Drum Motor from the Drum Sub assembly.

NOTE

When reassembling, confirm (A) portion of the Drum Sub assembly whether the Carbon Brush is in there or not.

(Fig. B-1)

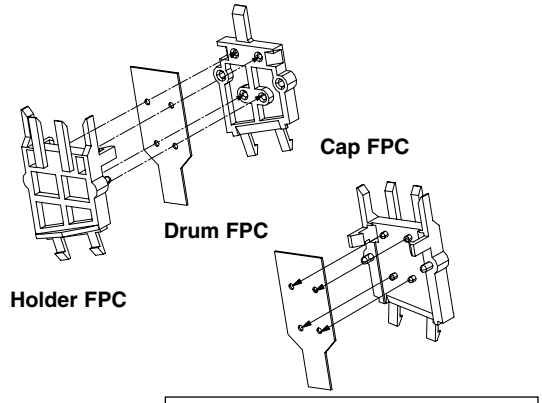

Download from Www.Somanuals.com. All Manuals Search And Download.

DECK MECHANISM DISASSEMBLY

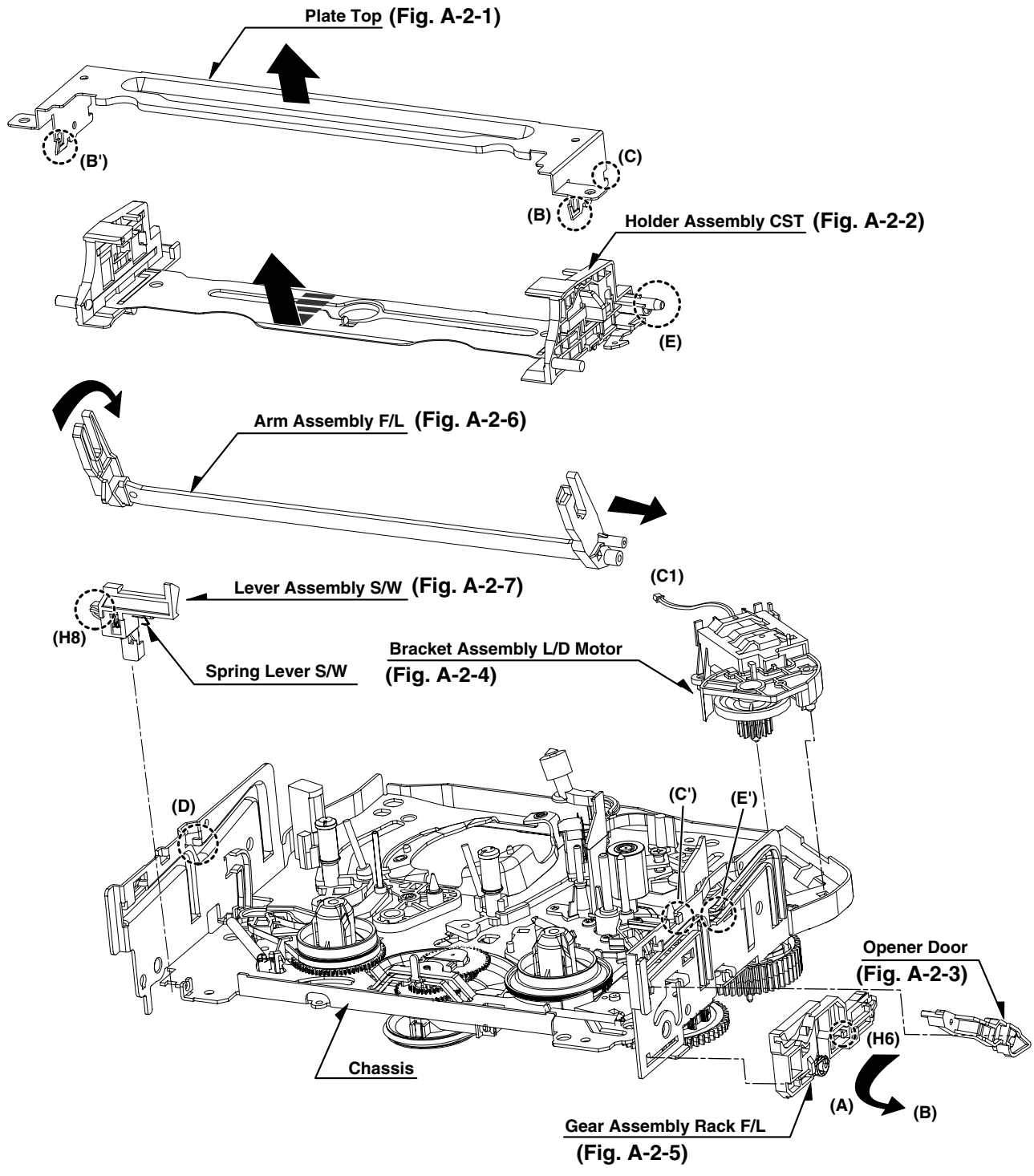

Fig. A-2

Download from Www.Somanuals.com. All Manuals Search And Download.

2. Plate Top (Fig. A-2-1)

1) Pull the (B) portion of the Plate Top back in direction of arrow and separate the right side of it.
2) pull the (B') portion of the Plate Top back in direction of arrow and separate the left side of it.
   (Used tools : (-) type driver, anything tool with sharp point or flat point.)

NOTE

(1) When reassembling, push the Plate Top after alignment the two position(C), (C') as below Fig.

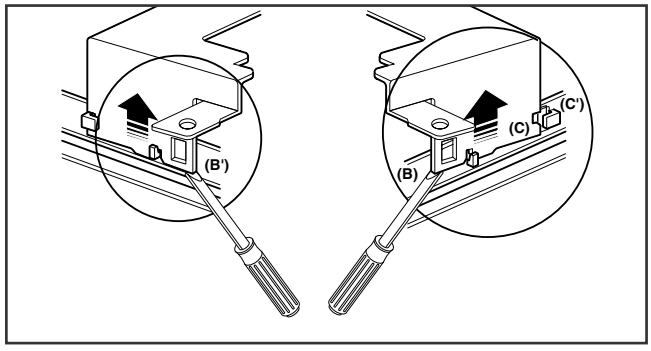

3. Holder Assembly CST (Fig.A-2-2)

1) Move the Holder Assembly CST in direction of arrow and separate the left side of it first through the (D) position of the Chassis.

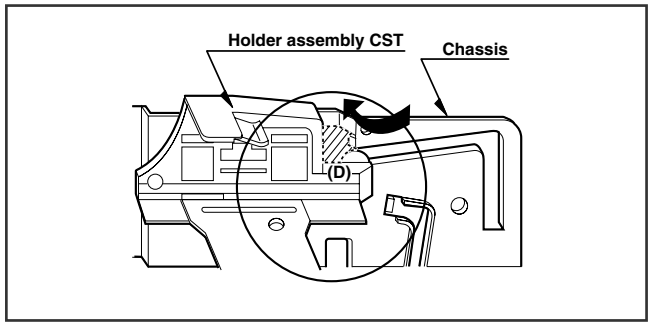

2) Disassemble the right side of the Holder Assembly CST from each guided hole of the Chassis.

NOTE

When reassembling, insert the (E) part of the Holder Assembly CST in the (E') hole of the Chassis first and assemble the left side of it.

4. Opener Door (Figure. A-2-3)

1) Turn the Opener Door clockwise and remove it through the guide hole of the Chassis.

5. Bracket Assembly L/D Motor (Fig. A-2-4)

1) Unplug the Connector(C1).
2) Unhook three Hooks(H3, H4, H5) on bottom side of the Chassis, lift up the Bracket Assembly L/M and disassemble the Bracket Assembly L/D Motor.

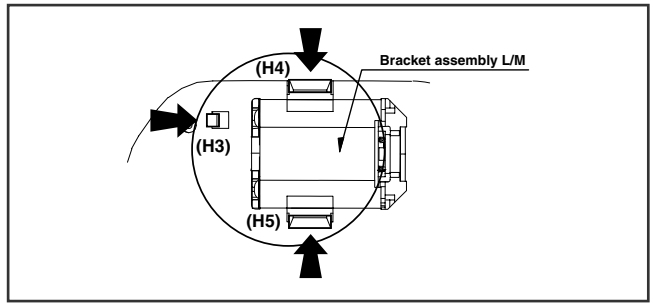

6. Gear Assembly Rack F/L (Fig. A-2-5)

1) Move the Gear Assembly Rack F/L in direction of arrow(A) and unhook the Hook(H6) pulling back in front.
2) Separate the Gear Rack F/L in direction of arrow(B).

NOTE

When reassembling, align the gear part of the Gear Assembly Rack F/L with the Gear Drive as below Fig.

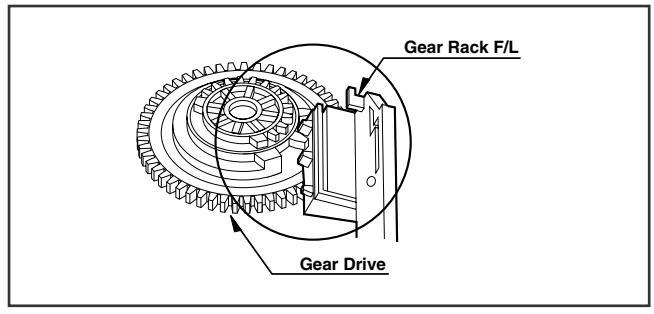

7. Arm Assembly F/L (Fig. A-2-6)

1) Move the Arm Assembly F/L in direction of arrow and separate the left side of it first.
2) Disassemble the Arm Assembly F/L from each guided hole of the Chassis.

8. Lever Assembly S/W(Fig. A-2-7)

1) Unhook the Hook(H8) in the left side of the Chassis and remove the Lever Assembly S/W.

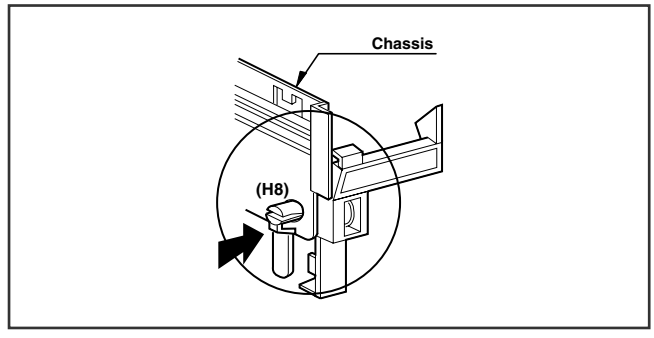

Download from Www.Somanuals.com. All Manuals Search And Download.

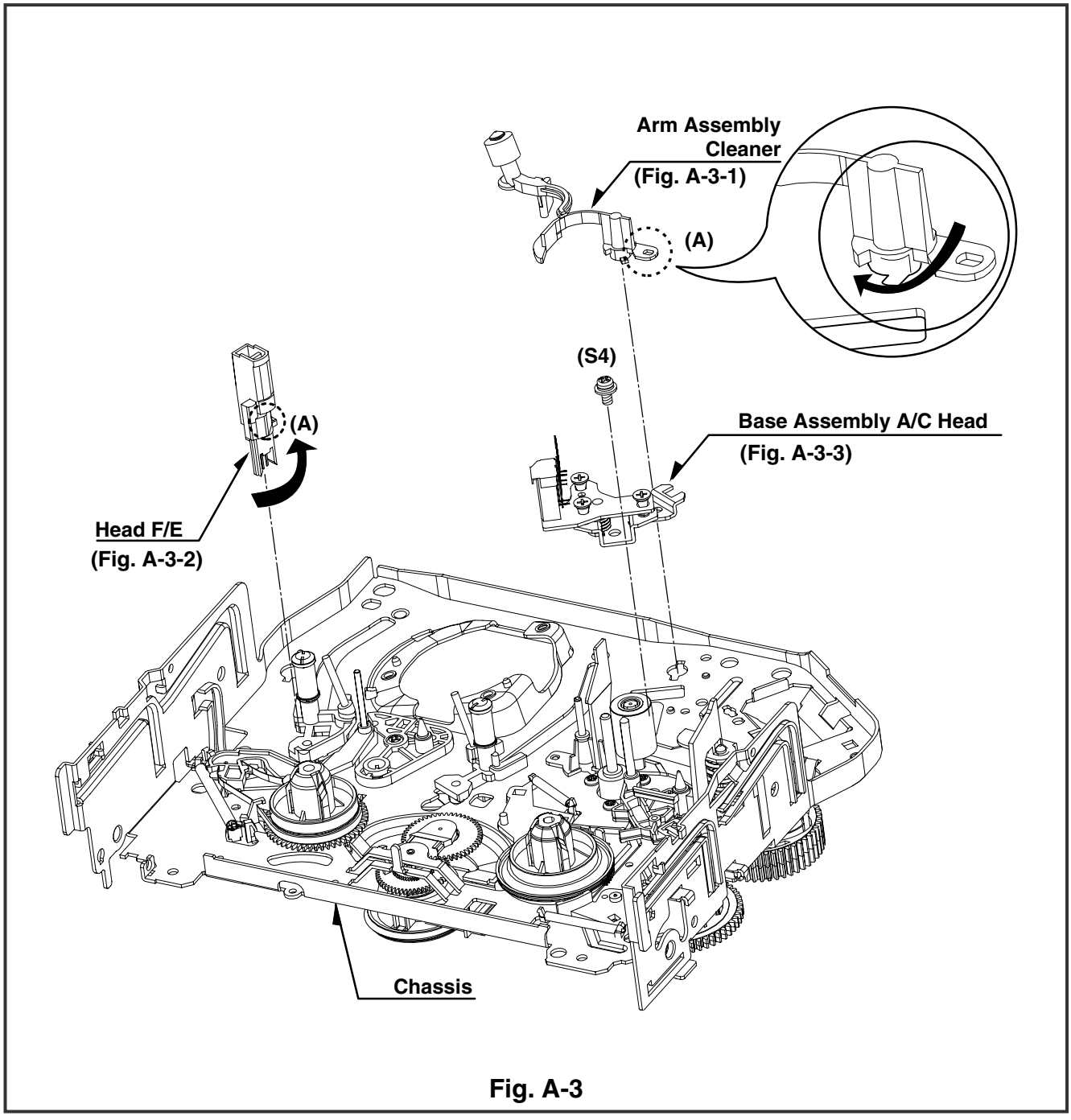

Fig. A-3

9. Arm Assembly Cleaner (Fig. A-3-1)

1) Breakaway the (A) portion as Fig. A-3-1 from the embossing of the Chassis, turn the Arm assembly Cleaner to clockwise direction and lift it up.

10. Head F/E (Fig. A-3-2)

1) Breakaway the (A) portion of the Head F/E from the embossing of the Chassis, turn it to counterclockwise direction and lift it up.

11. Base Assembly A/C Head (Fig. A-3-3)

1) Remove the Screw(S4) and lift the Base Assembly A/C Head up.

Download from Www.Somanuals.com. All Manuals Search And Download.

DECK MECHANISM DISASSEMBLY

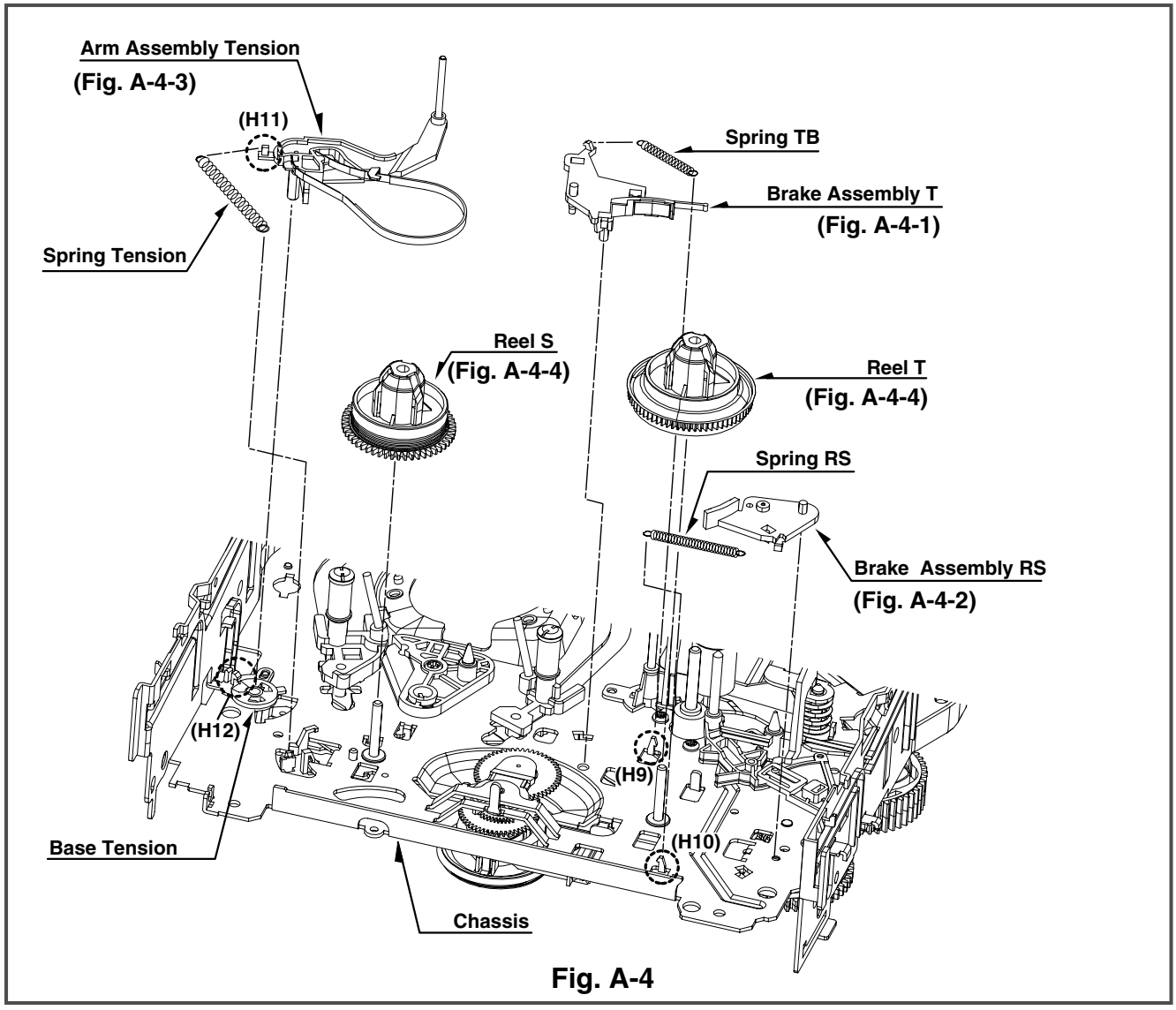

Fig. A-4

12. Brake Assembly T (Fig. A-4-1)

1) Unhook the Spring TB from the Hook(H9) of the Chassis.
2) Lift the Brake Assembly T up.

13. Brake Assembly RS (Fig. A-4-2)

1) Unhook the Spring RS from the Hook(H10) of the Chassis.
2) Lift the Brake Assembly T up.

14. Arm Assembly Tension (Fig. A-4-3)

1) Unhook the Spring Tension from the Hook(H11) of the Arm Assembly Tension.
2) Unhook the Hook(H12) of the Base Tension and lift the Arm Assembly Tension up.

NOTE

Difference for Springs

	Spring TB	
	Spring RS	Color (Black)
	Spring Tension	

15. Reel S / Reel T (Fig. A-4-4)

1) Difference for Reel S / Reel T

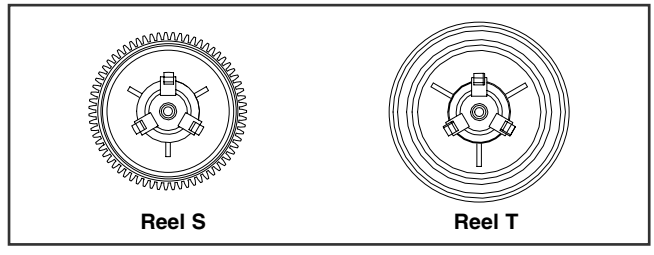

Download from Www.Somanuals.com. All Manuals Search And Download.

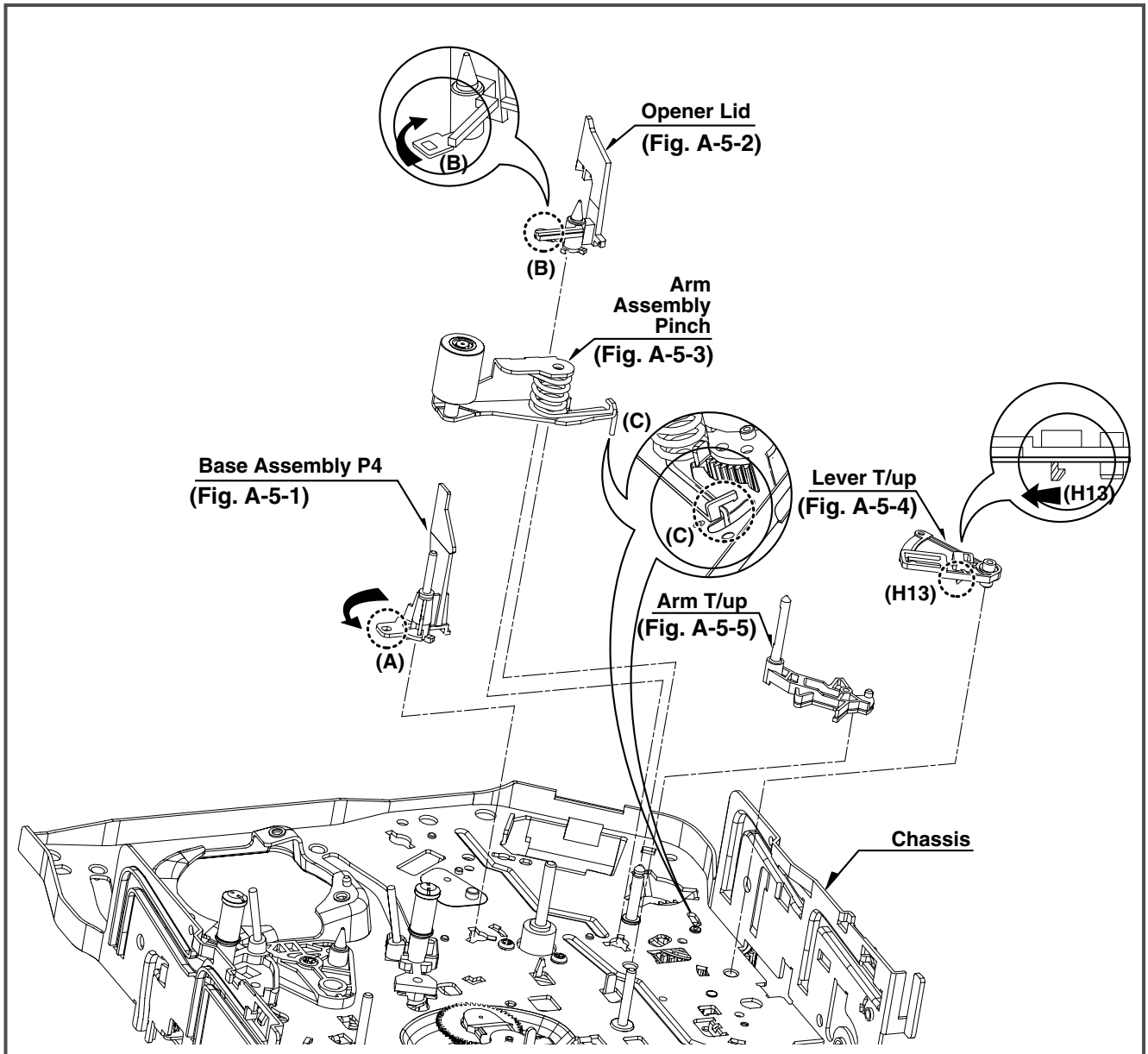

Fig. A-5

16. Base Assembly P4 (Fig. A-5-1)

1) Breakaway the (A) portion of the Base Assembly P4 from the embossing of the Chassis.
2) Turn the Base Assembly P4 to counterclockwise direction and lift it up.

17. Opener Lid (Fig. A-5-2)

1) Breakaway the (B) portion of the Opener Lid from the embossing of the Chassis.
2) Turn the Opener Lid to clockwise direction and lift it up.

18. Arm Assembly Pinch (Fig. A-5-3)

1) Lift the Arm Assembly Pinch up.

NOTE

When reassembling, confirm the (C) portion of the Arm Assembly Pinch is inserted to the Chassis hole correctly as Fig.

19. Lever T/up (Fig. A-5-4)/ Arm T/up (Fig. A-5-5)

1) Unhook the Hook(H13) of the bottom Chassis and lift the Lever T/up up.
2) Lift the Arm T/up up.

Download from Www.Somanuals.com. All Manuals Search And Download.

DECK MECHANISM DISASSEMBLY

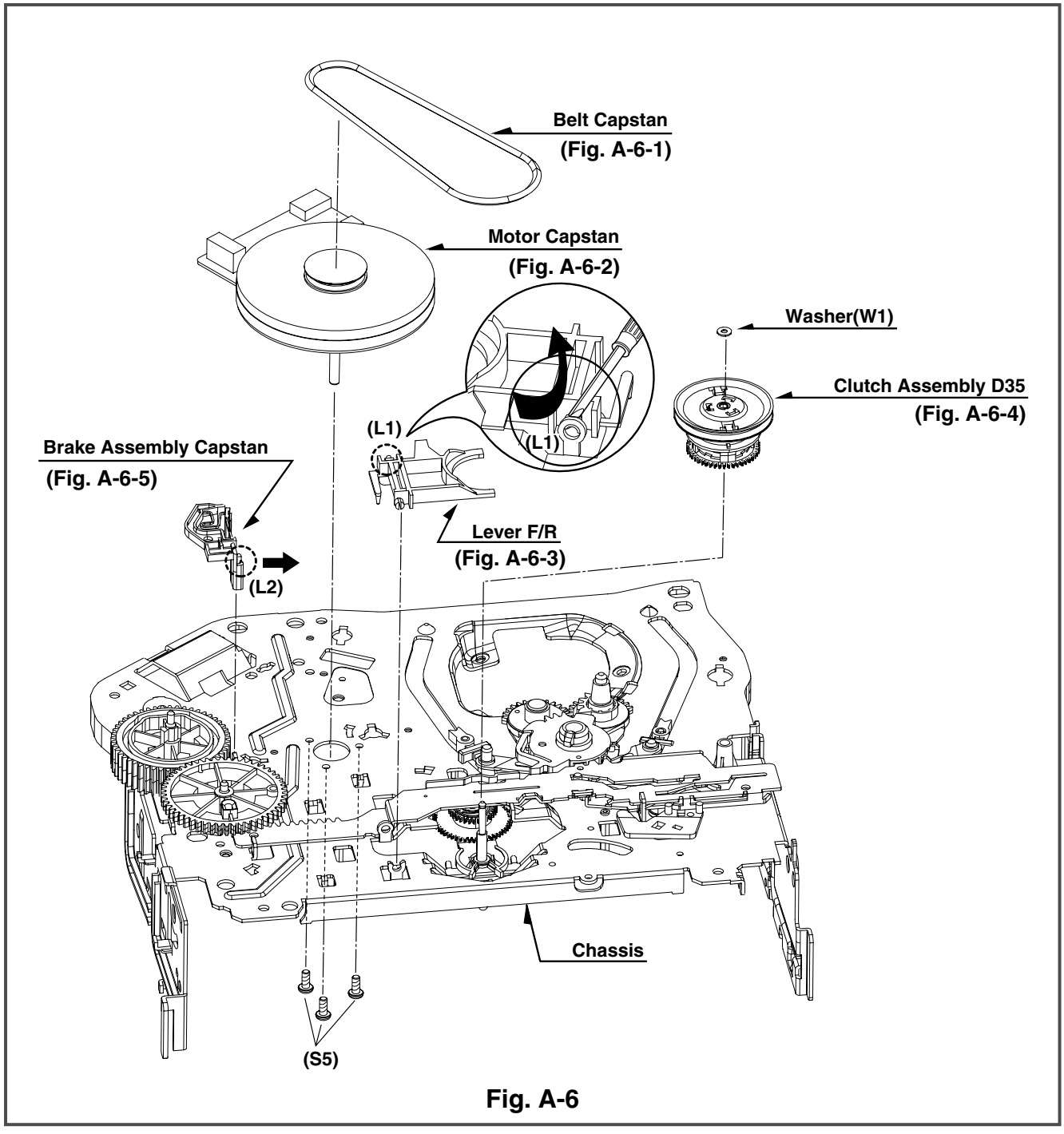

Fig. A-6

20. Belt Capstan (Fig. A-6-1)/ Motor Capstan (Fig. A-6-2)

1) Remove the Belt Capstan.
2) Remove the three Screws(S5) on bottom Chassis and lift the Motor Capstan up.

21. Lever F/R (Fig. A-6-3)

1) Unlock the Locking Tab(L1) as Fig. A-6-3 and lift the Lever F/R up.

22. Clutch Assembly D35 (Fig. A-6-4)

1) Remove the Washer(W1) and lift the Clutch Assembly D35 up.

23. Brake Assembly Capstan (Fig. A-6-5)

1) Pull the Locking Tab(L2) back in direction of arrow and lift it up.

Download from Www.Somanuals.com. All Manuals Search And Download.

DECK MECHANISM DISASSEMBLY

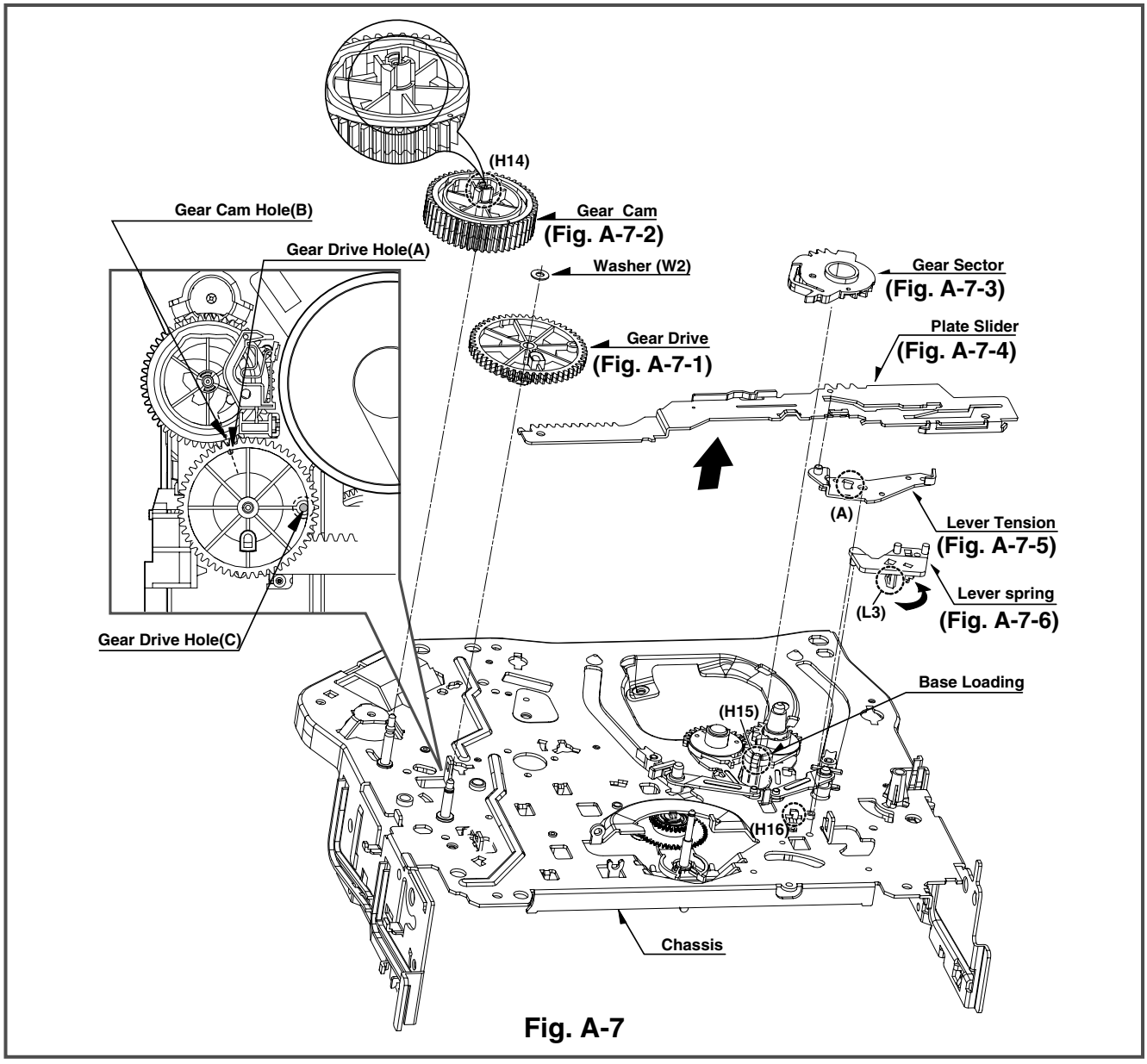

Fig. A-7

24. Gear Drive (Fig. A-7-1)/ Gear Cam (Fig. A-7-2)

1) Remove the Washer(W2) and lift the Gear Drive up.
2) Unhook the Hook(H14) of the Gear Cam and lift the Gear Cam up.

NOTE

When reassembling, align the Gear Drive Hole(A) and the Gear Cam Hole(B) in a straight line after the Gear Drive Hole(C) is aligned with the Chassis Hole as Fig.

25. Gear Sector (Fig. A-7-3)

1) Unhook the Hook(H15) of the Base Loading on bottom Chassis and lift the Gear Sector up.

26. Plate Slider (Fig. A-7-4)

1) Just lift the Plate Slider up.

27. Lever Tension (Fig. A-7-5)

1) Unhook the (A) portion of the Lever Tension from the Hook(H16) of the Chassis.
2) Turn the Lever Tension to counterclockwise direction and lift it up.

28. Lever Spring (Fig. A-7-6)

1) Unlock the Locking Tab(L3) of the bottom Chassis and lift the Lever Spring up.

Download from Www.Somanuals.com. All Manuals Search And Download.

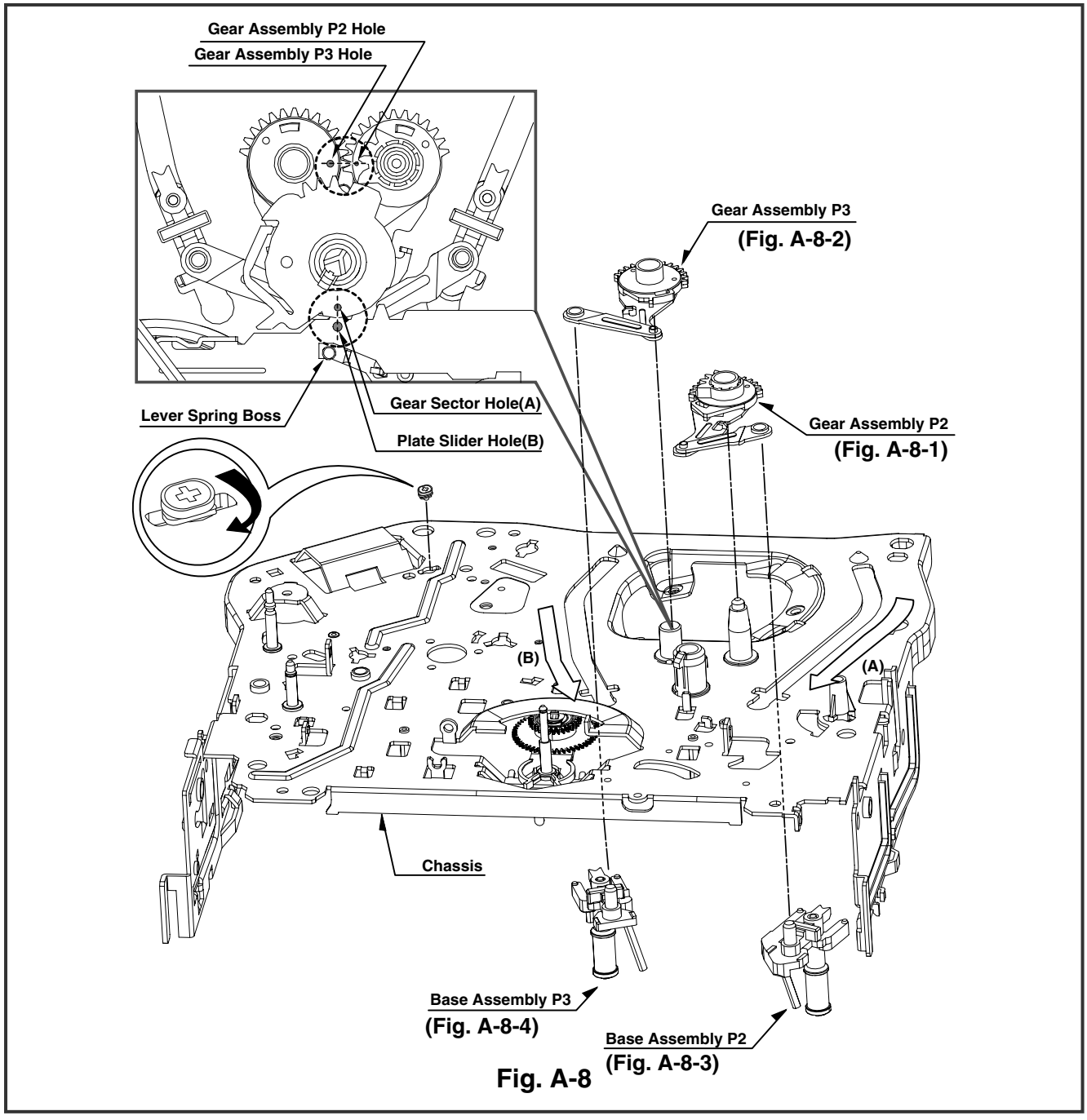

Fig. A-8

29. Gear Assembly P2 (Fig. A-8-1)/ Gear Assembly P3 (Fig. A-8-2)

1) Just lift the Gear Assembly P2 up.
2) Just lift the Gear Assembly P3 up.

NOTE

When reassembling, align the two holes of the Gear Assembly P2 and P3 in a straight line after confirmation whether the Gear Sector Hole(A) and the Plate Slider Hole(B) are aligned or not as Fig.

30. Base Assembly P2 (Fig. A-8-3)/ Base Assembly P3 (Fig. A-8-4)

1) Move the Base Assembly P2 in direction of arrow(A) along the guide hole of the Chassis and disassemble it on bottom side.
2) Move the Base Assembly P3 in direction of arrow(B) along the guide hole of the Chassis and disassemble it on bottom side.

Download from Www.Somanuals.com. All Manuals Search And Download.

DECK MECHANISM DISASSEMBLY

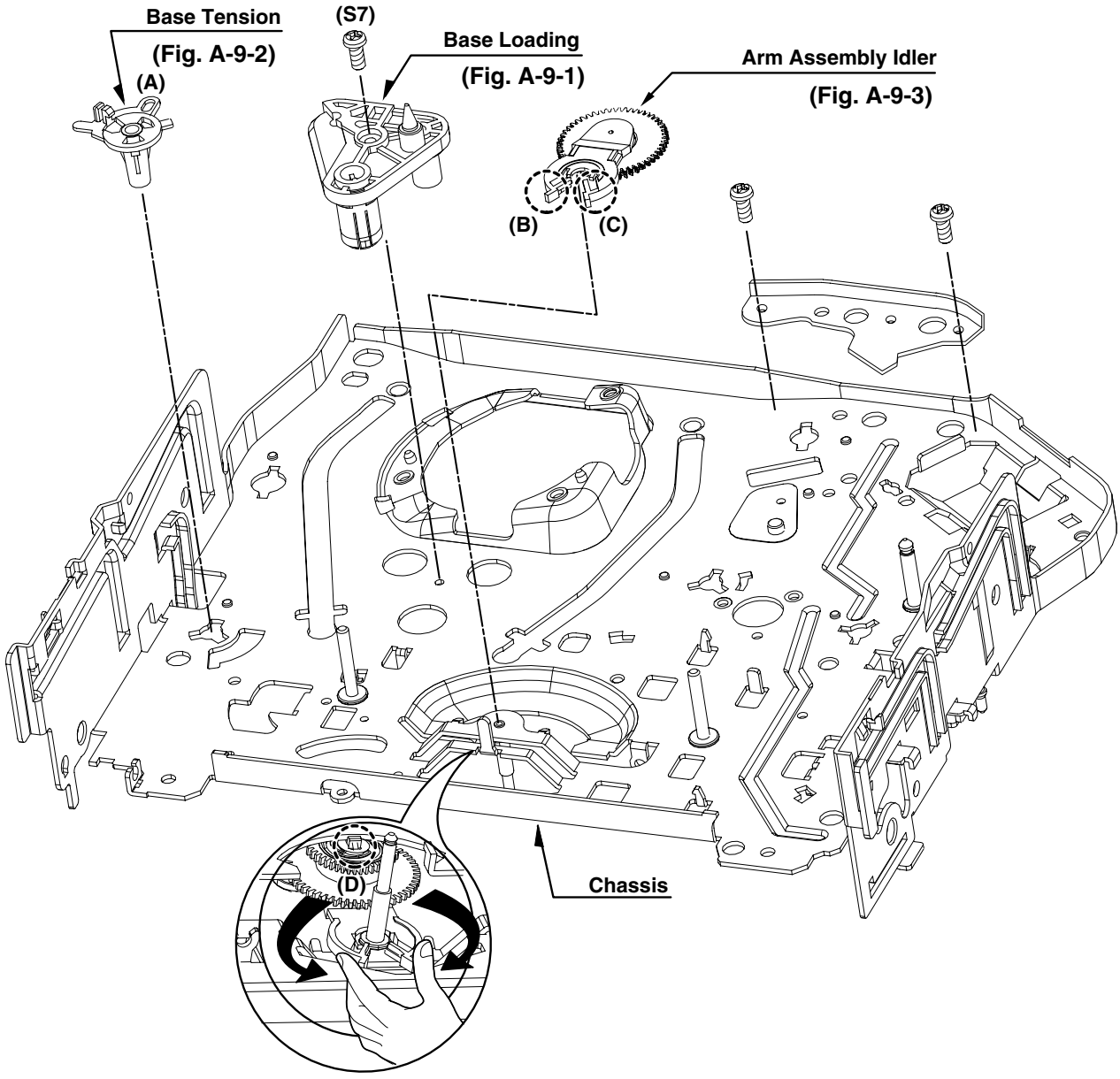

Fig. A-9

31. Base Loading (Fig. A-9-1)

1) Remove the Screw(S7).
2) Lift the Base Loading up.

32. Base Tension (Fig. A-9-2)

1) Breakaway the (A) portion of the Base Tension from the embossing of the Chassis.
2) Turn the Base Tension to counterclockwise direction and lift it up.

33. Arm Assembly Idler (Fig. A-9-3)

1) Make narrower the two parts, (B) and (C), as Fig. A-9-3.
2) Lift the Arm assembly Idler up.

NOTE

When disassembling, be careful not to be caught the (D) part by the Chassis as Fig.

Download from Www.Somanuals.com. All Manuals Search And Download.

DECK MECHANISM ADJUSTMENT

• Tools and Fixfures for Service

1. Cassette Torque Meter **SRK-VHT-303(Not SVC part)** **Parts No: D00-D006** 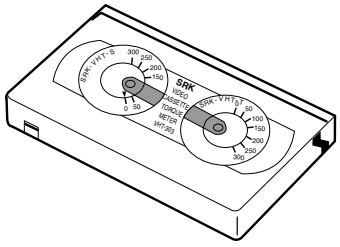	**2. Alignment Tape** **Parts No NTSC: DTN-001** **PAL:DTN-0002** 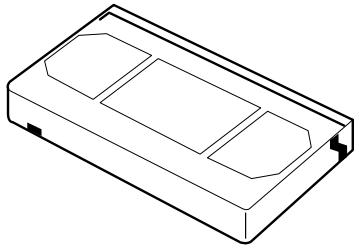	**3. Torque Gauge** **600g.Cm ATG** **Parts No:D00-D002** 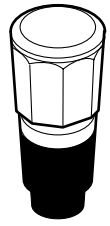
4. Torque Gauge Adaptor **Parts No:D09-R001** 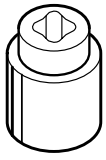	**5. Post Height Adjusting Driver** **Parts No:DTL-0005** 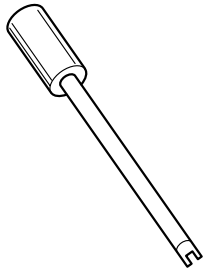	**6. + Type Driver (ø 5)** 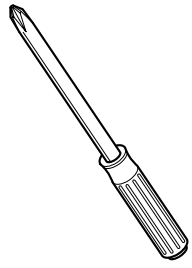

Download from Www.Somanuals.com. All Manuals Search And Download.

DECK MECHANISM ADJUSTMENT

1. Mechanism Alignment Position Check

Purpose:To determine if the Mechanism is in the correct position, when a Tape is ejected.

Test Equipment/ Fixture	Test Conditions (Mechanism Condition)	Check Point
• Blank tape	• Eject Mode (with Cassette ejected)	• Mechanism and Mode Switch Position

1) Turn the Power S/W on and eject the Cassette by pressing the Eject Button.
2) Remove the Top Cover and Plate Assembly Top, visually check if the Gear Cam Hole is aligned with the Chassis Hole as below Fig. C-2.
3) IF not, rotate the Shaft of the Loading Motor to either clockwise or counterclockwise until the alignment is as below Fig. C-2.
4) Remove the Screw which fixes the Deck Mechanism and Main Frame and confirm if the Gear Cam is aligned with the Gear Drive as below Fig. C-1(A).
5) Confirm if the Mode S/W on the Main P.C.Board is aligned as below Fig. C-1(B).
6) Remount the Deck Mechanism on the Main P.C.Board and check each operation.

CHECK DIAGRAM

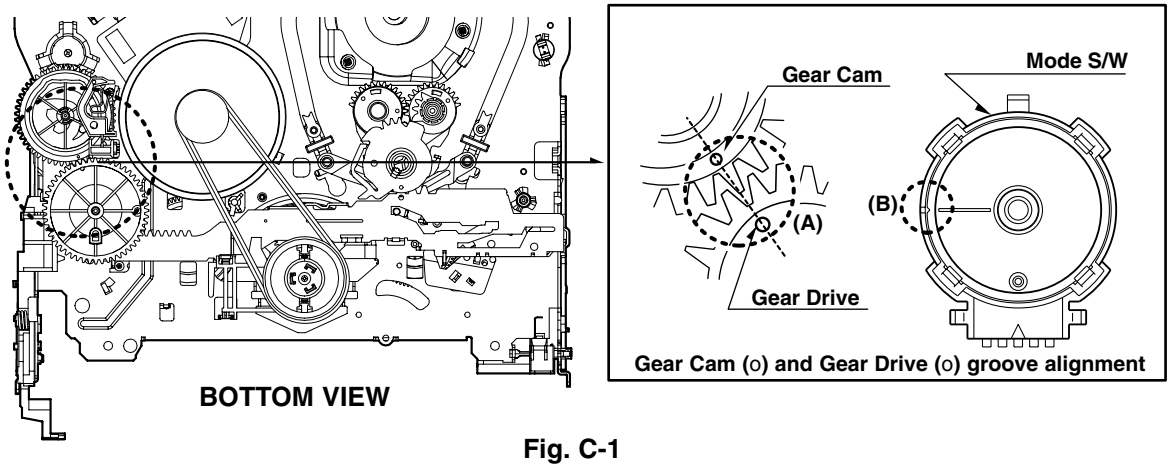

Fig. C-1

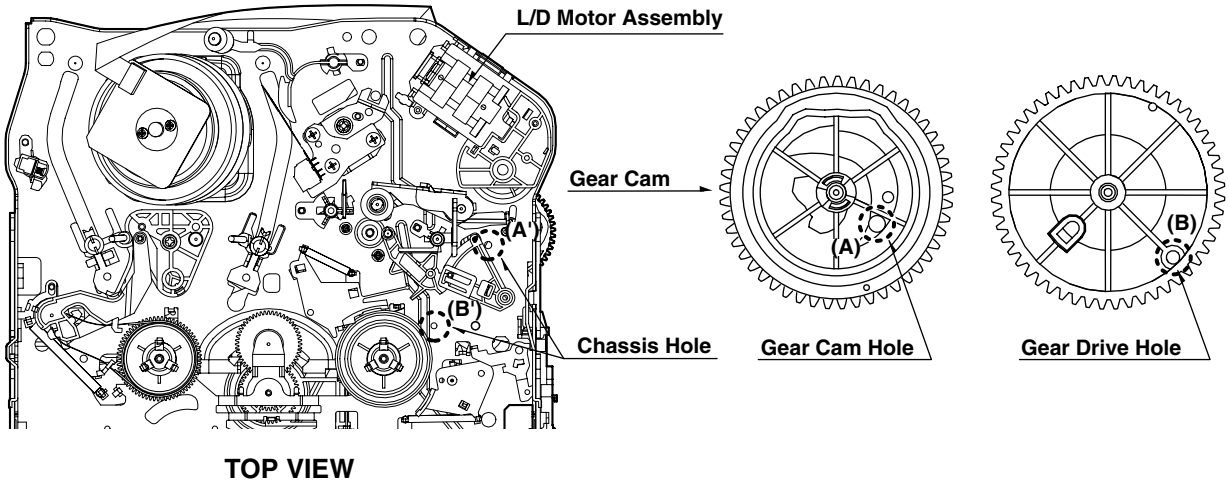

Fig. C-2

Download from Www.Somanuals.com. All Manuals Search And Download.

2. Preparation for Adjustment (To set the Deck Mechanism of the loading state without inserting a cassette tape).

1) Unplug the power cord from the AC outlet.
2) Disassemble the Top Cover and Plate Assembly Top.
3) Plug the power cord into the AC outlet.
4) Turn the power S/W on and push the Lever Stopper of the Holder Assembly CST to the back for loading the cassette without tape.
Cover the holes of the End Sensors at the both sides of the Chassis to prevent a light leak.
Then the Deck Mechanism drives to the Stop Mode.
In this case, the Deck Mechanism can accept inputs of each mode, however the Rewind and Review operation can not be performed for more than a few seconds because the Take-up Reel Table is in the Stop State and can not be detected the Reel Pulses.

3. Checking Torque

Purpose: To insure smooth transport of the tape during each mode of operation.
If the tape transport is abnormal, then check the torque as indicated by the chart below.

Test Equipment/ Fixture	Test Conditions (Mechanism Condition)	Checking Method
• Torque Gauge(600g/cm ATG) • Torque Gauge Adaptor • Cassette Torque Meter SRK-VHT-303	• Play (FF) or Review (REW) Mode	• Perform each Deck Mechanism mode without inserting a cassette tape(Refer to above No.2 Preparation for Adjustment). • Read the measurement of the Take-up or Supply Reels on the Cassette Torque Meter(Fig. C-3-2). • Attach the Torque Gauge Adaptor to the Torque Gauge and then read the value of it(Fig. C-3-1).

Item	Mode	Test Equipment	Measurement Reel	Measurement Values
Fast Forward Torque	Fast Forward	Cassette Torque Gauge	Take-Up Reel	More than 400g/cm
Rewind Torque	Rewind	Cassette Torque Gauge	Supply Reel	More than 400g/cm
Play Take-Up Torque	Play	Cassette Torque Meter	Take-Up Reel	40~100g/cm
Review Torque	Review	Cassette Torque Meter	Supply Reel	120~210g/cm

NOTE:

The values are measured by using a Torque Gauge and Torque Gauge Adaptor with the Torque Gauge affixed.

NOTE:

The torque reading to measure occurs when the tape abruptly changes direction from Fast Forward to Rewind Mode, when quick braking is applied to both Reels.

• Torque Gauge (600g.cm ATG)

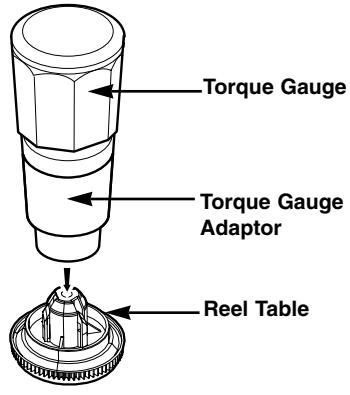

Fig. C-3-1

• Cassette Torque Meter (SRK-VHT-303)

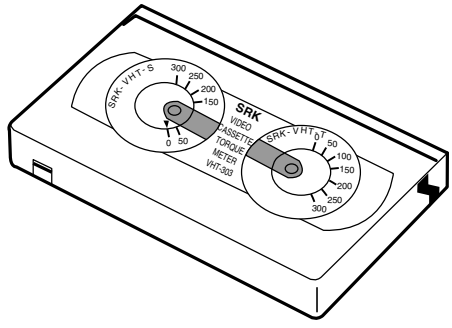

Fig. C-3-2

Download from Www.Somanuals.com. All Manuals Search And Download.

4.Guide Roller Height Adjustment

Purpose: To regulate the height of the tape so that the bottom of the tape runs along the tape guide line on the Lower Drum.

4-1. Preliminary Adjustment

Test Equipment/ Fixture	Test Conditions (Mechanism Condition)	Adjustment Point
• Post Height Adjusting Driver	• Play or Review Mode	• Guide Roller Height Adjustment screws on the Supply and Take-Up Guide Rollers.

Adjustment Procedure

1) Confirm if the tape runs along the tape guide line of the Lower Drum.
2) If the tape runs the bottom of the guide line, turn the Guide Roller Height Adjustment Screw to clockwise direction.
3) If it runs the top, turn to counterclockwise direction.
4) Adjust the height of the Guide Roller to be guided to the guide line of the Lower Drum from the starting and ending point of the Drum.

ADJUSTMENT DIAGRAM

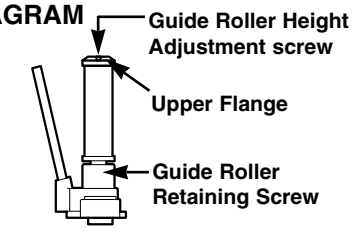

Fig. C-4-1

4-2. Precise Adjustment

Test Equipment/Fixture	Test Equipment Connection Points	Test Conditions VCR(VCP) State	Adjustment Point
• Oscilloscope • Alignment Tape • Post Height Adjusting Driver	• CH-1:PB RF Envelope • CH-2:NTSC: SW 30Hz PAL: SW 25Hz • Head Switching Output Point • RF Envelope Output Point	• Play an Alignment Tape	• Guide Roller Height Adjustment Screws

Adjustment Procedure

1) Play an Alignment Tape after connecting the probe of the Oscilloscope to the RF Envelope Output Test Point and Head Switching Output Test Point.
2) Tracking Control(in PB Mode) : Center Position(When this adjustment is performed after the Drum Assembly has been replaced, set the Tracking Control so that the RF Output is Maximum).
3) Height Adjustment Screw : Flatten the RF waveform. (Fig. C-4-2)
4) Turn(Move) the Tracking Control(in PB Mode) clockwise and counterclockwise.(Fig. C-4-3)
5) Check that any drop of RF Output is uniform at the start and end of the waveform.

NOTE

If the adjustment is excessive or insufficient the tape will jam or fold.

Waveform Diagrams

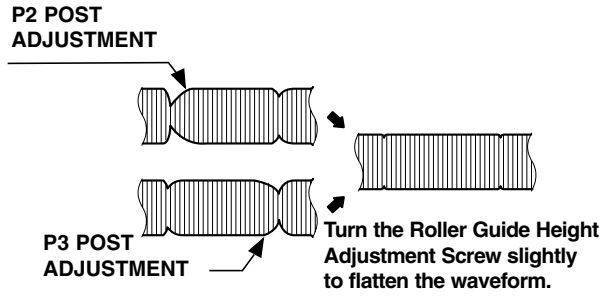

Fig. C-4-2

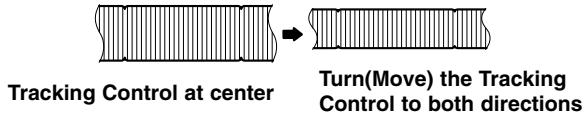

Fig. C-4-3

Connection Diagram

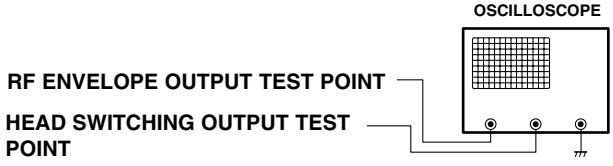

Download from Www.Somanuals.com. All Manuals Search And Download.

5. Audio/Control (A/C) Head Adjustment

Purpose: To insure that the tape passes accurately over the Audio and Control Tracks in exact alignment of the both Record and Playback Modes.

5-1. Preliminary Adjustment (Height and Tilt Adjustment)
Perform the Preliminary Adjustment, when there is no Audio Output Signal with the Alignment Tape.

Test Equipment/ Fixture	Test Conditions (Mechanism Condition)	Adjustment Point
• Blank Tape • Screw Driver(+) Type 5mm	• Play the blank tape	• Tilt Adjustment Screw(C) • Height Adjustment Screw(B) • Azimuth Adjustment Screw(A)

Adjustment Procedure/Diagrams

1) Initially adjust the Base Assembly A/C Head as shown Fig. C-5-1 by using the Height Adjustment Screw(B).
2) Play a blank tape and observe if the tape passes accurately over the A/C Head without tape curling or folding.
3) If folding or curling is occured then adjust the Tilt Adjustment Screw(C) while the tape is running to resemble Fig. C-5-3.
4) Reconfirm the tape path after Playback about 4~5 seconds.

NOTE

Ideal A/C head height occurs when the tape runs between 0.2~0.25mm above the bottom edge of the A/C Head core.

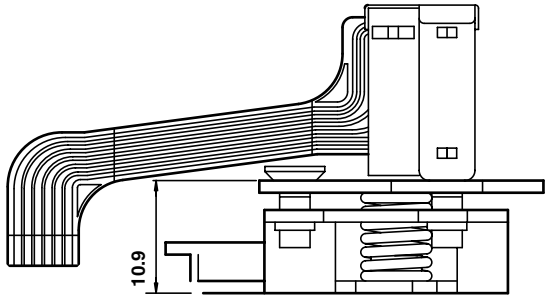

A/C Head Base

Fig. C-5-1

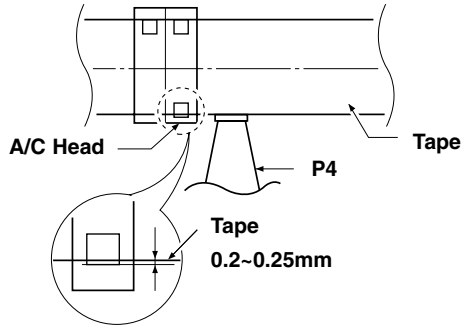

Fig. C-5-3

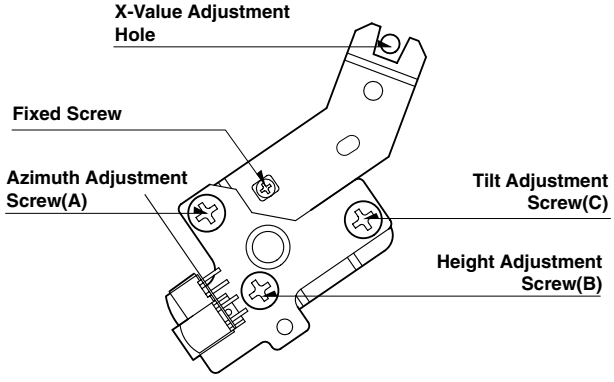

A/C Head Assembly

Fig. C-5-2

Download from Www.Somanuals.com. All Manuals Search And Download.

5-2. Confirm that the tape passes smoothly between the Take-up Guide and Pinch Roller(using a mirror or the naked eye).

1) After completing Step 5-1.(Preliminary Adjustment), check that the tape passes around the Take-up Guide and Pinch Roller without folding or curling at the top or bottom.
   (1) If folding or curling is observed at the bottom of the Take-up Guide then slowly turn the Tilt Adjustment Screw(C) in the clockwise direction.
   (2) If folding or curling is observed at the top of it then slowly turn the Tilt Adjustment Screw(C) in the counterclockwise direction.

NOTE:

Check the RF envelope after adjusting the A/C Head, if the RF waveform differs from Fig. C-5-4, performs Precise Adjustment to flat the RF waveform.

5-3. Precise Adjustment (Azimuth adjustment)

Test Equipment/ Fixture	Connection Point	Test Conditions (Mechanism Condition)	Adjustment Point
• Oscilloscope • Alignment Tape(SP) • Screw Driver(+) Type 5mm	• Audio output jack	• Play an Alignment Tape 1KHz, 7KHz Sections	• Azimuth Adjustment Screw(A) • Height Adjustment Screw(B)

Adjustment Procedure

1) Connect the probe of the oscilloscope to Audio Output Jack.
2) Alternately adjust the Azimuth Adjustment Screw(A) and the Tilt Adjustment Screw(C) for maximum output of the 1KHz and 7KHz segments, while maintaining the flattest envelope differential between the two frequencies.

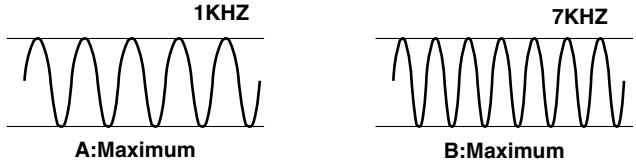

Fig. C-5-4

6. X-Value Adjustment

Purpose: To obtain compatibility with the other VCR(VCP) Models.

Test Equipment/ Fixture	Connection Point	Test Conditions (Mechanism Condition)	Adjustment Point
• Oscilloscope • Alignment Tape(SP only) • Screw Driver(+) Type 5mm	• CH-1: PB RF Envelope • CH-2: NTSC: SW 30Hz PAL: SW 25Hz • Head Switching Output Test Point • RF Envelope Output Test Point	• Play an Alignment Tape	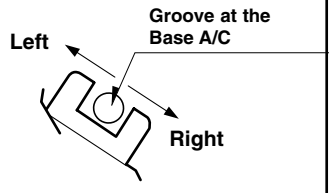

Adjustment Procedure

1) Release the Automatic Tracking to run long enough for tracking to complete it's cycle.
2) Loosen the Fixed Mounting Screw and move the Base Assembly A/C Head in the direction as shown in the diagram to find the center of the peak that allows for the maximum waveform envelope.
   This method should allow the 31µm Head to be centrally located over the 58µm tape track.
3) Tighten the Base Assembly A/C Head mounting Screw.

Adjustment Diagram

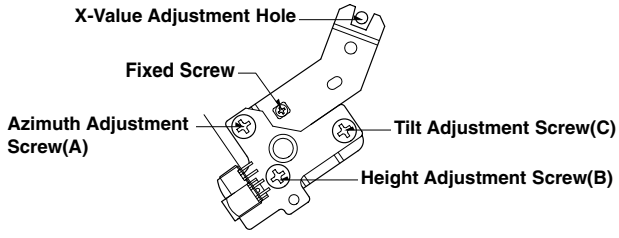

Connection Diagram

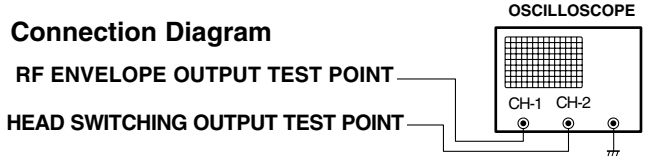

Download from Www.Somanuals.com. All Manuals Search And Download.

DECK MECHANISM ADJUSTMENT

7. Adjustment after Replacing Drum Assembly (Video Heads)

Purpose: To correct for shift in the Roller Guide and X value after replacing the Drum.

Test Equipment/ Fixture	Connection Point	Test Conditions (Mechanism Condition)	Adjustment Points
• Oscilloscope • Alignment Tapes • Blank Tape • Post Height Adjusting Driver • Screw Driver(+) Type 5mm	• CH-1: PB RF Envelope • CH-2: NTSC: SW 30Hz PAL: SW 25Hz • Head Switching Output Test Point • RF Envelope Output Test Point	• Play the Blank Tape • Play an Alignment Tape	• Guide Roller Precise Adjustment • Switching Point • Tracking Preset • X-Value

Checking/Adjustment Procedure

Play a blank tape and check for tape curling or creasing around the Roller Guide. If there is a problem then follow the procedure 4. "Guide Roller Height" and 5. "Audio Control(A/C) Head Adjustment".

Connection Diagram

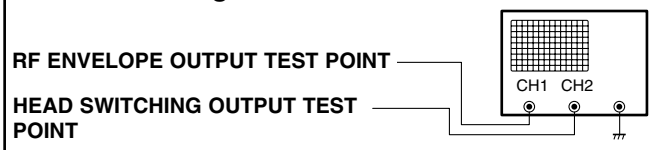

Waveform

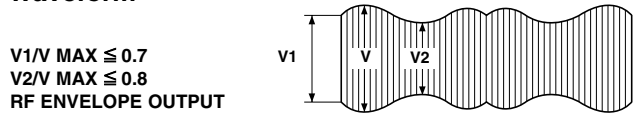

Fig. C-7

8. Check the Tape Travel after Reassembling Deck Assembly.

8-1. Checking Audio and RF Locking Time during playback and after CUE or REV (FF/REW)

Test Equipment/ Fixture	Specification	Connection Points	Test Conditions (Mechanism Condition)
• Oscilloscope • Alignment Tapes(with 6H 3KHz Color Bar Signal) • Stop Watch	• RF Locking Time: Less than 5 sec. • Audio Locking Time:Less than 10sec	• CH-1: PB RF Envelope • CH-2: Audio Output • RF Envelope Output Point • Audio Output Jack	• Play an Alignment Tape (with 6H 3kHz Color Bar Signal)

Checking Procedure

Play an Alignment Tape then change the operating mode to CUE or REV and confirm if the unit meets the above listed specifications.

NOTES:

1) CUE is the forward search mode
2) REV is the backward search mode
3) Refer to the Play mede

8-2. Checking for tape curling or jamming

Test Equipment/ Fixture	Specification	Test Conditions (Mechanism Condition)
• T-160 Tape • T-120 Tape	• Be sure there is no tape jamming or curling at the begining, middle or end of the tape.	• Run the CUE, REV, Play mode at the beginning and the end of the tape.

Checking Procedure

1) Confirm that the tape runs smoothly around the roller guides, Drum and A/C Head Assemblies while abruptly changing operating modes from Play to CUE or REV. This is to be checked at the begining, middle and end sections of the tape.
2) Confirm that the tape passes over the A/C Head Assembly as indicated by proper audio reproduction and proper tape counter performance.

Download from Www.Somanuals.com. All Manuals Search And Download.

MAINTENANCE/INSPECTION PROCEDURE

1. Check before starting repairs

The following faults can be remedied by cleaning and oiling. Check the needed lubrication and the conditions of cleanliness in the unit.
Check with the customer to find out how often the unit is used, and then determine that the unit is ready for inspection and maintenance. Check the following parts.

Phenomenon	Inspection	Replacement	
Color beats	Dirt on Full-Erase Head	o	F/E Head
Poor S/N, no color	Dirt on Video Head	o	Video Head
Vertical or Horizontal jitter	Dirt on Video Head Dirt on tape transport system	o	
Low volume, Sound distorted	Dirt on Audio/Control Head	o	A/C Head
Tape does not run. Tape is slack	Dirt on Pinch Roller	o	Pinch Roller Belt Capston
In Review and Unloading (off mode), the tape is rolled up loosely.	Clutch Assembly D35 torque reduced	o	Clutch Assembly D35
	Cleaning Drum and transport system	Fig. C-9-3	

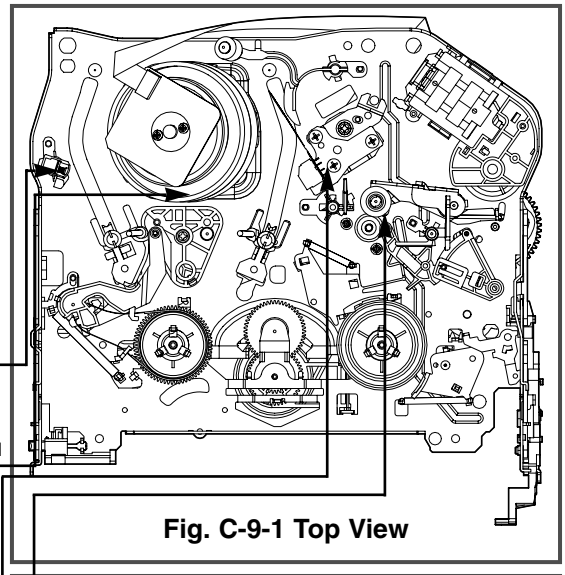

Fig. C-9-1 Top View

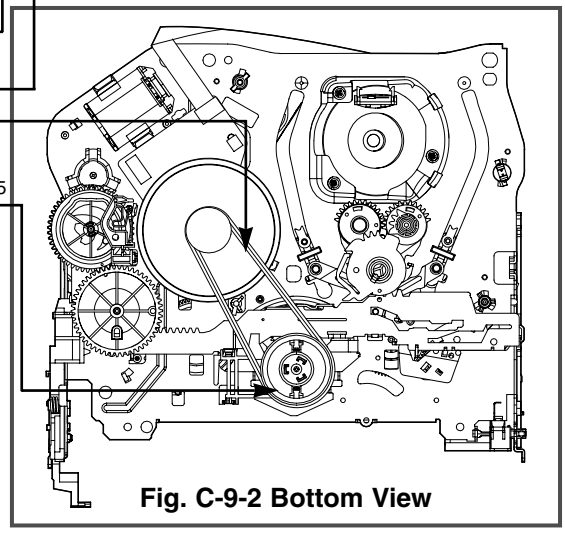

Fig. C-9-2 Bottom View

NOTE

If locations marked with **o** do not operate normally after cleaning, check for wear and replace.
See the EXPLODED VIEWS at the end of this manual as well as the above illustrations and see the Greasing (Page 4-21, 22) for the sections to be lubricated and greased.

*** No. (1)~(12) Indicates the Tape Path to be traveled from Supply Reel to Take-up Reel.**

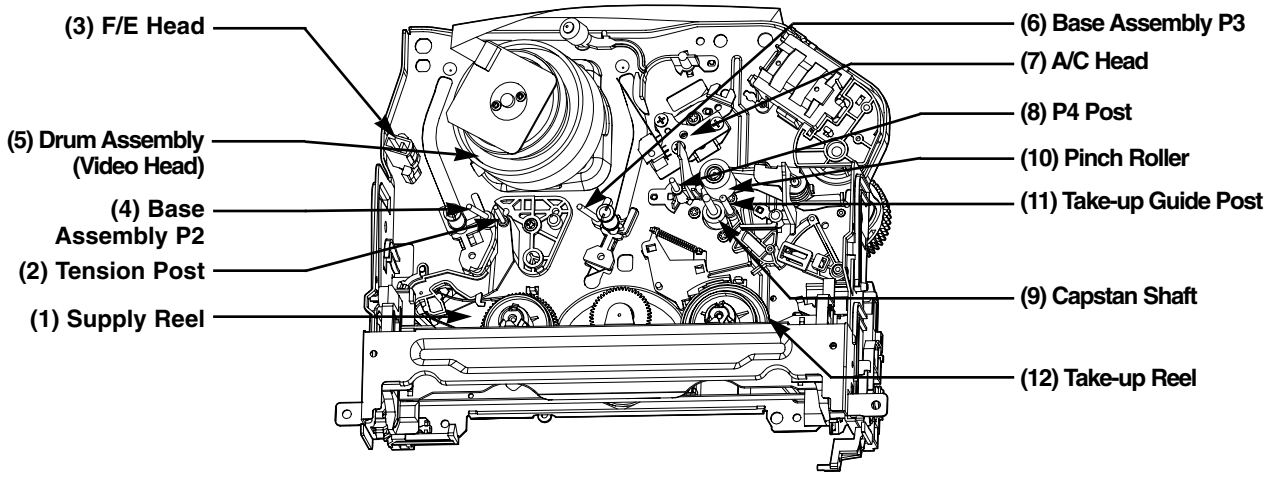

Fig. C-9-3 Tape Transport System

Download from Www.Somanuals.com. All Manuals Search And Download.

2. Required Maintenance

The recording density of a VCR(VCP) is much higher than that of an audio tape recorder. VCR(VCP) components must be very precise, at tolerances of 1/1000mm, to ensure compatibility with the other VCRs. If any of these components are worn or dirty, the symptoms will be the same as if the part is defective. To ensure a good picture, periodic inspection and maintenance, including replacement of worn out parts and lubrication, is necessary.

3. Scheduled Maintenance

Schedules for maintenance and inspection are not fixed because they vary greatly according to the way in which the customer uses the VCR(VCP), and the environment in which the VCR(VCP) is used.
But, in general home use, a good picture will be maintained if inspection and maintenance is made every 1,000 hours. The table below shows the relation between time used and inspection period.

Table 1

When inspection is necessary / Average hours used per day	About 1 year	About 18 months	About 3 years
One hour	■	■	■
Two hours	■	■	
Three hours	■		

4. Supplies Required for Inspection and Maintence

(1) Grease : Kanto G-311G (Blue) or equivalent
(2) Isopropyl Alcohol or equivalent
(3) Cleaning Patches
(4) Grease : Kanto G-381(Yellow)

5. Maintenance Procedure

5-1) Cleaning

(1) Cleaning video head
First use a cleaning tape. If the dirt on the head is too stubborn to remove by tape, use the cleaning patch. Coat the cleaning patch with Isopropyl Alcohol. Touch the cleaning patch to the head tip and gently turn the head(rotating cylinder) right and left.
(Do not move the cleaning patch vertically. Make sure that only the buckskin on the cleaning patch comes into contact with the head. Otherwise, the head may be damaged.)
Thoroughly dry the head. Then run the test tape. If Isopropyl Alcohol remains on the video head, the tape may be damaged when it comes into contact with the head surface.
(2) Clean the tape transport system and drive system, etc, by wiping with a cleaning patch wetted with Isopropyl Alcohol.

NOTES:

① It is the tape transport system which comes into contact with the running tape. The drive system consists of those parts which moves the tape.
② Make sure that during cleaning you do not touch the tape transport system with excessive force that would cause deformation or damage to the system.

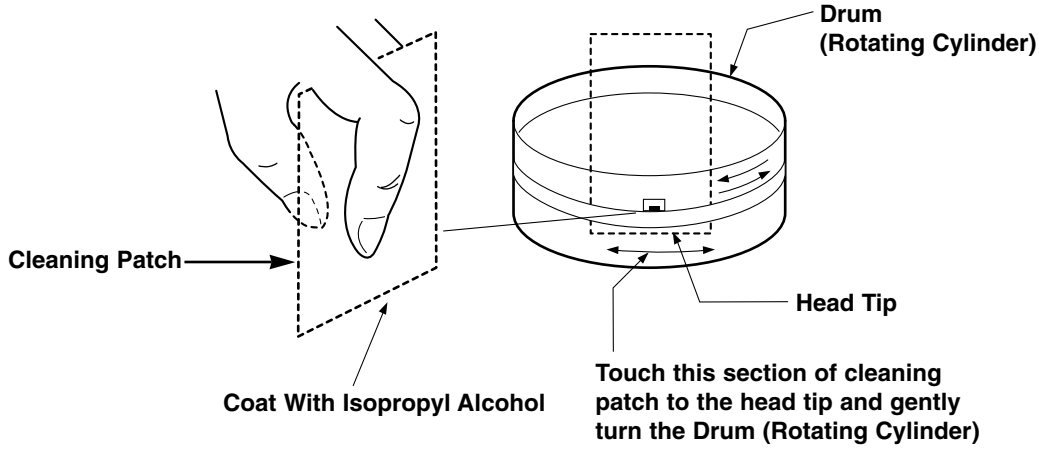

Fig. C-9-4

Download from Www.Somanuals.com. All Manuals Search And Download.

5-2) Greasing

(1) Greasing guidelines
Apply grease, with a cleaning patch. Do not use excessive grease. It may come into contact with the tape transport or drive system. Wipe excessive grease and clean with cleaning patch wetted in Isopropyl Alcohol.

NOTE:Greasing Points

1) Loading Path Inside & Top side
2) Base Assembly P2, P3 stopper
3) Shaft
4) L/D Motor Gear Wheel Part
5) Arm Take-up Rubbing Sections
6)Reel S,T shaft(G381:Yellow)
7) Arm Assembly F/L Rotating Sections

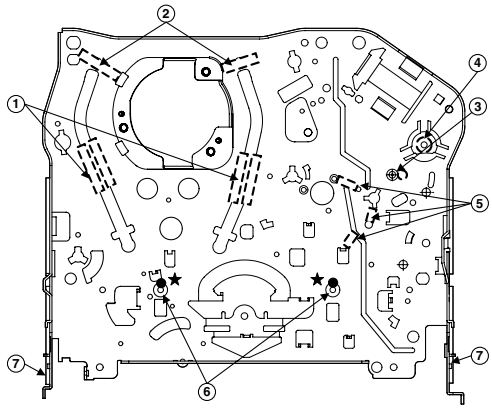

Chassis (Top)

Gear Part

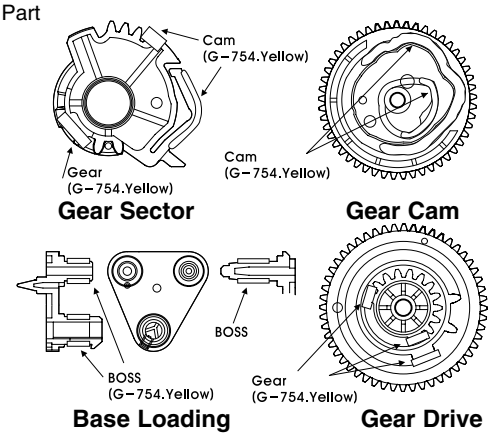

Gear Sector **Gear Cam**

Base Loading **Gear Drive**

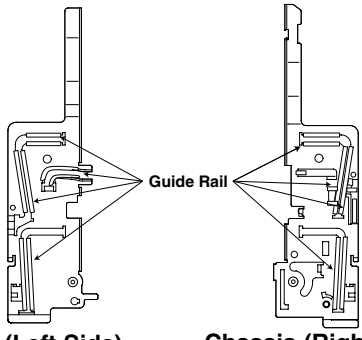

Chassis (Left Side) **Chassis (Right Side)**

(2) Periodic greasing
Grease specified locations every 5,000 hours.

1) Loading Path Inside & Top side
2) Base Assembly P2,P3 stopper
3) Shaft
4) Shaft
5) Clutch Assembly D35 Shaft
6) Plate Slider Guide Sections
7) Plate Slider Guide Sections
8) Gear Assembly P2, P2 Rubbing Sections

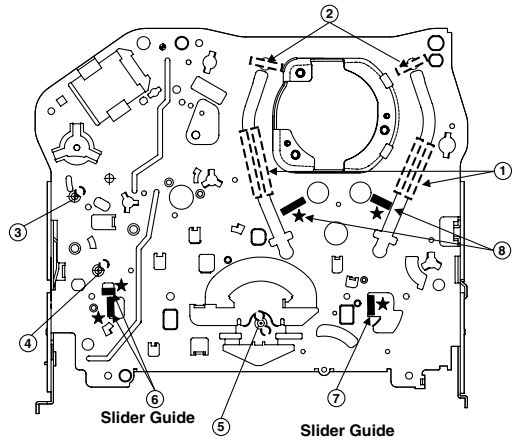

Chassis (Bottom)

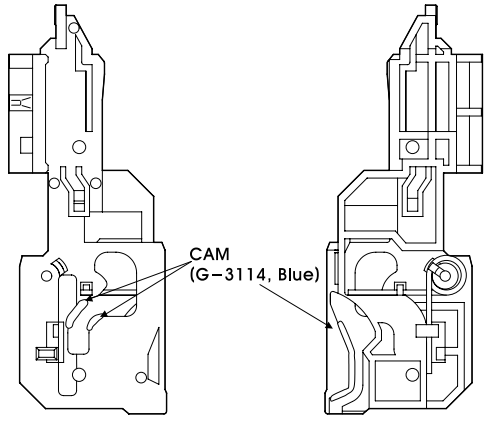

Gear Rack F/L

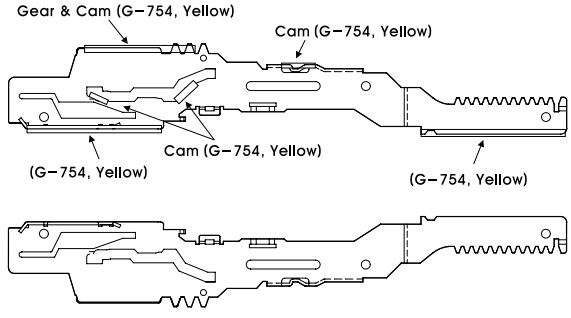

Plate Slider

Download from Www.Somanuals.com. All Manuals Search And Download.

Lever, F/R, Base, Tension

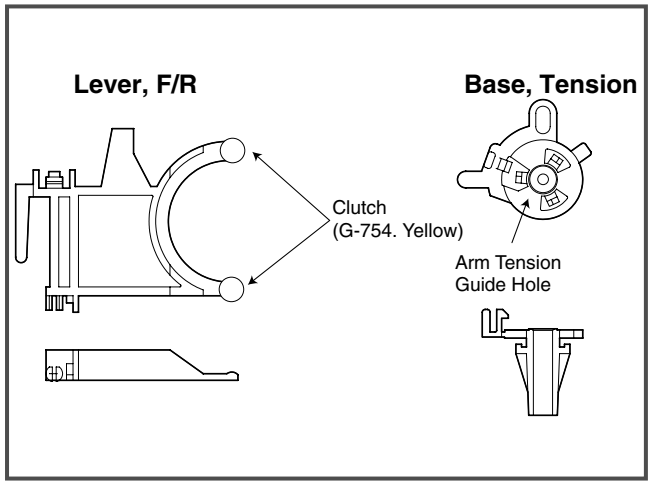

GEAR AY, P2 & P3

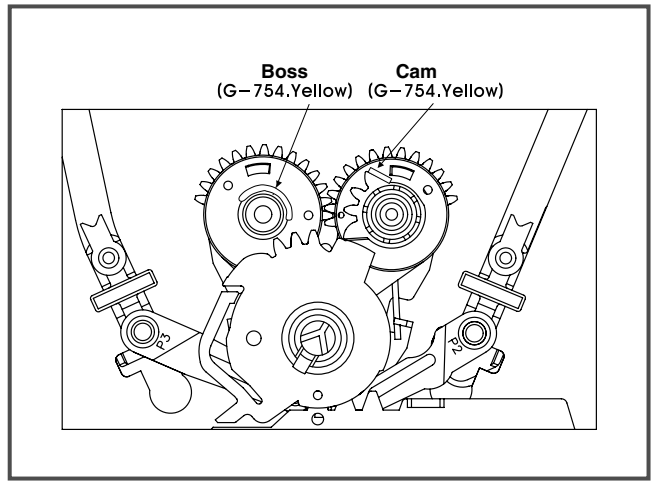

Download from Www.Somanuals.com. All Manuals Search And Download.

MECHANISM TROUBLESHOOTING GUIDE

1.Deck Mechanism

A.

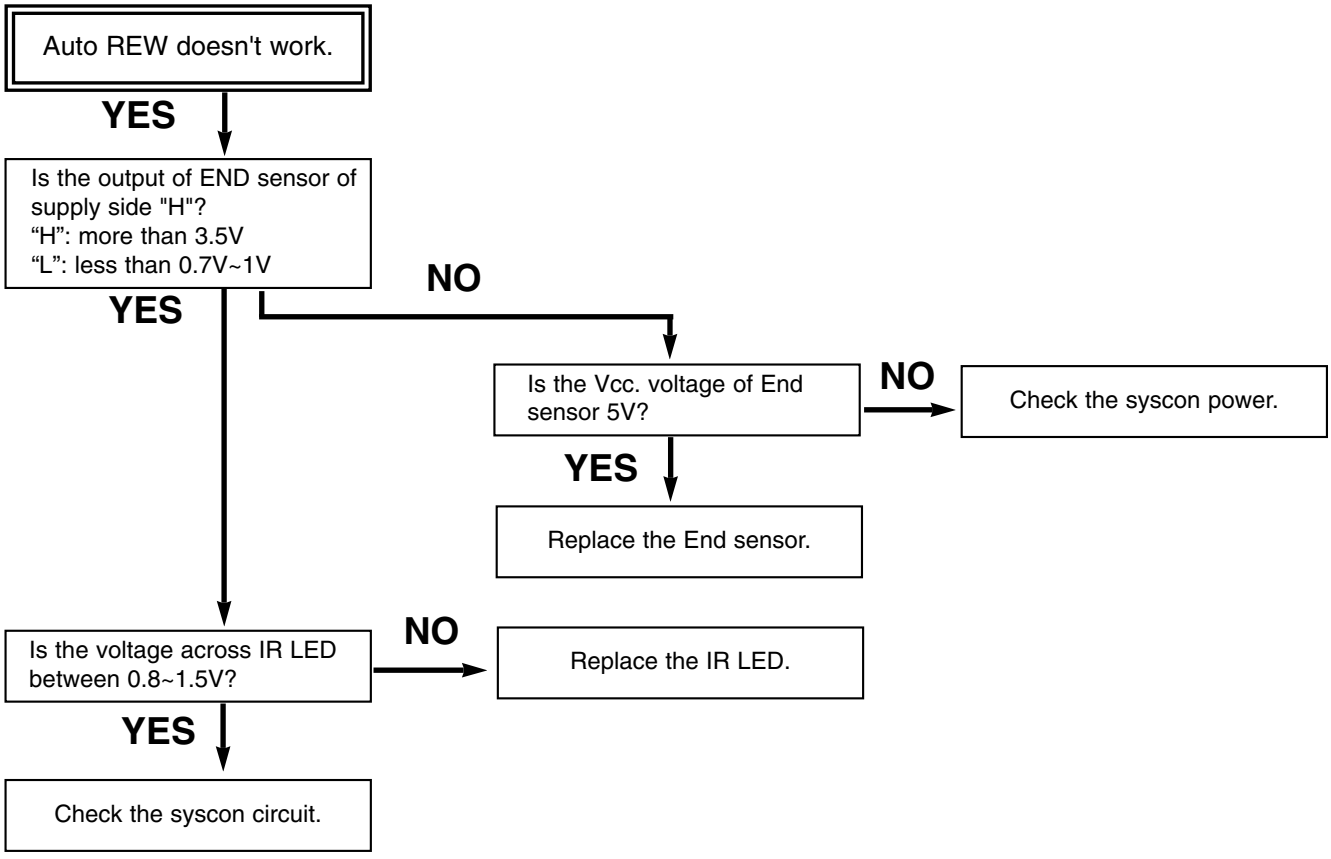

B.

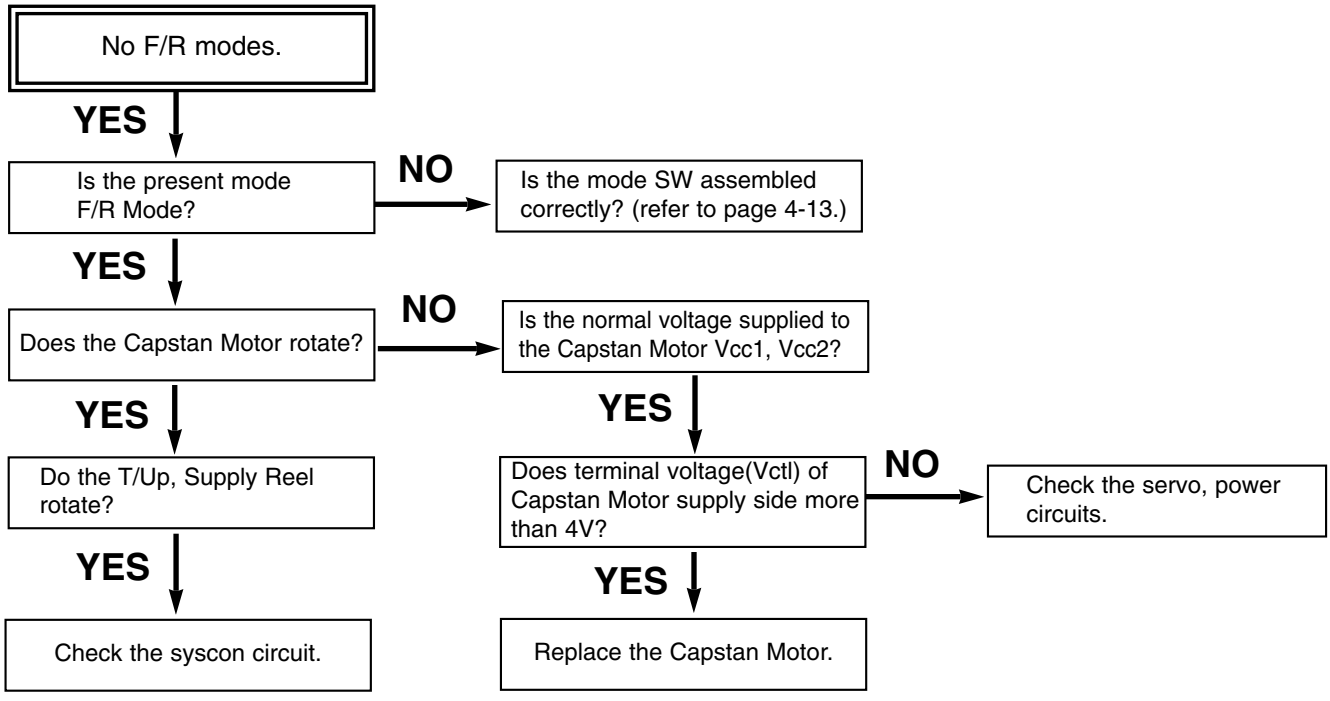

Download from Www.Somanuals.com. All Manuals Search And Download.

C.

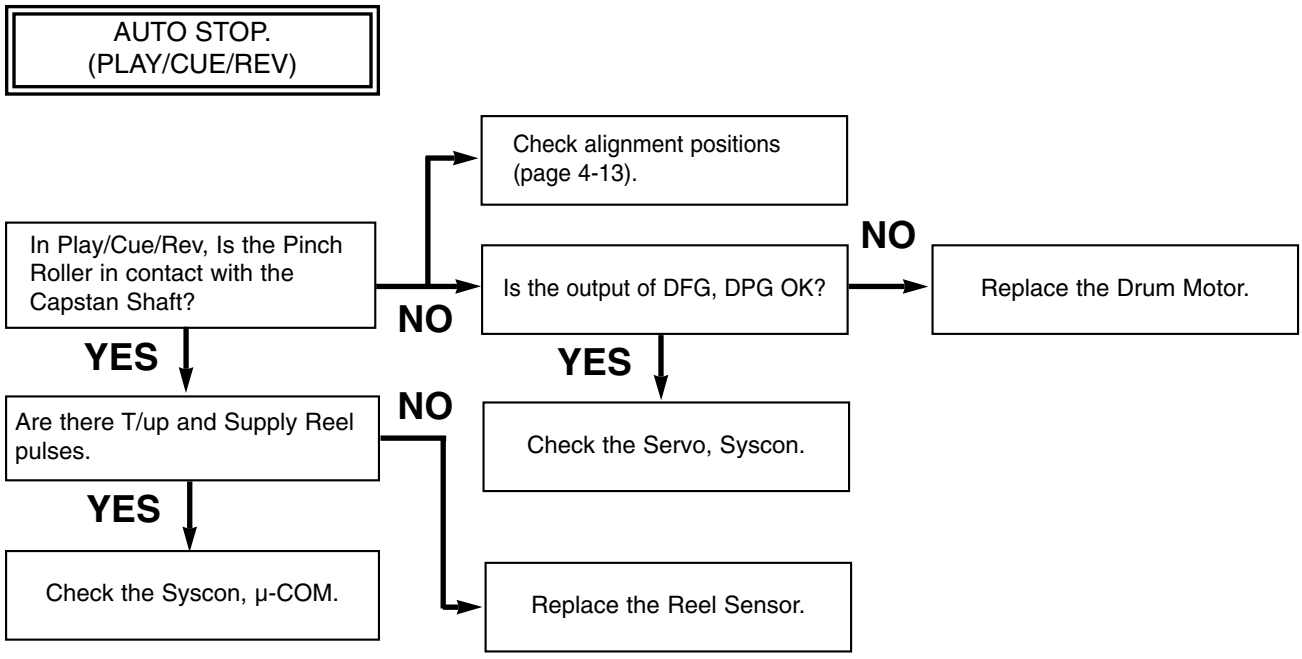

D.

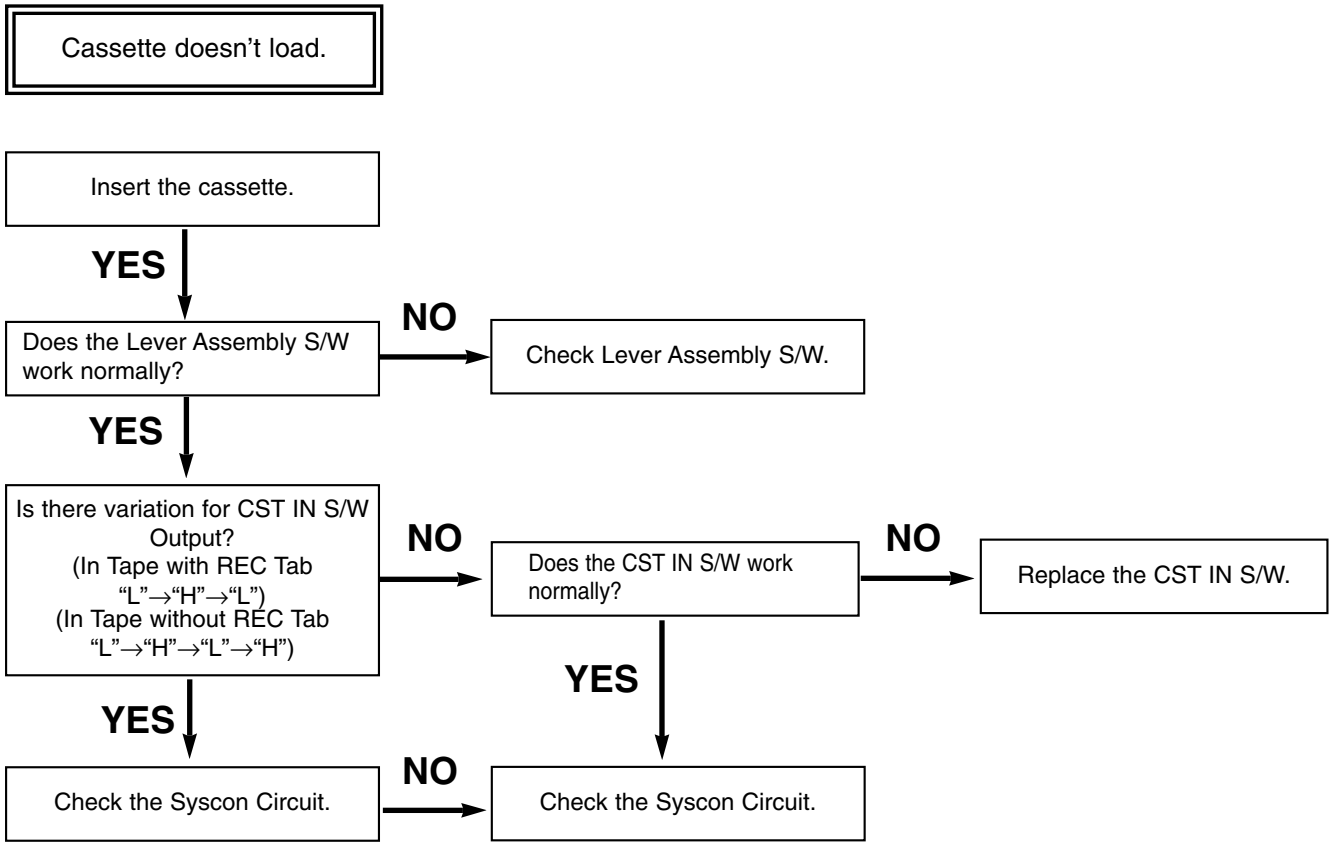

Download from Www.Somanuals.com. All Manuals Search And Download.

E.

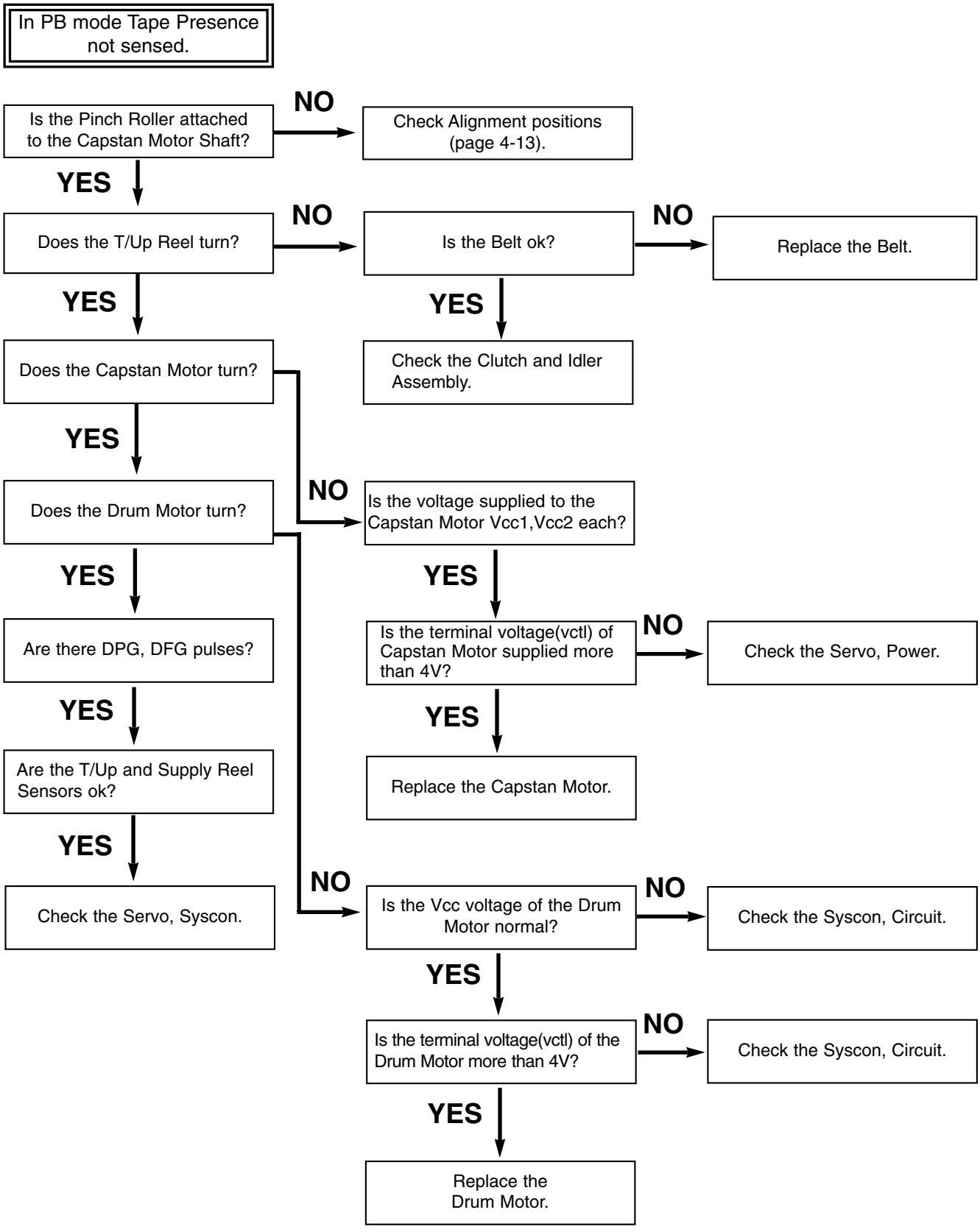

Download from Www.Somanuals.com. All Manuals Search And Download.

2. Front Loading Mechanism

A.

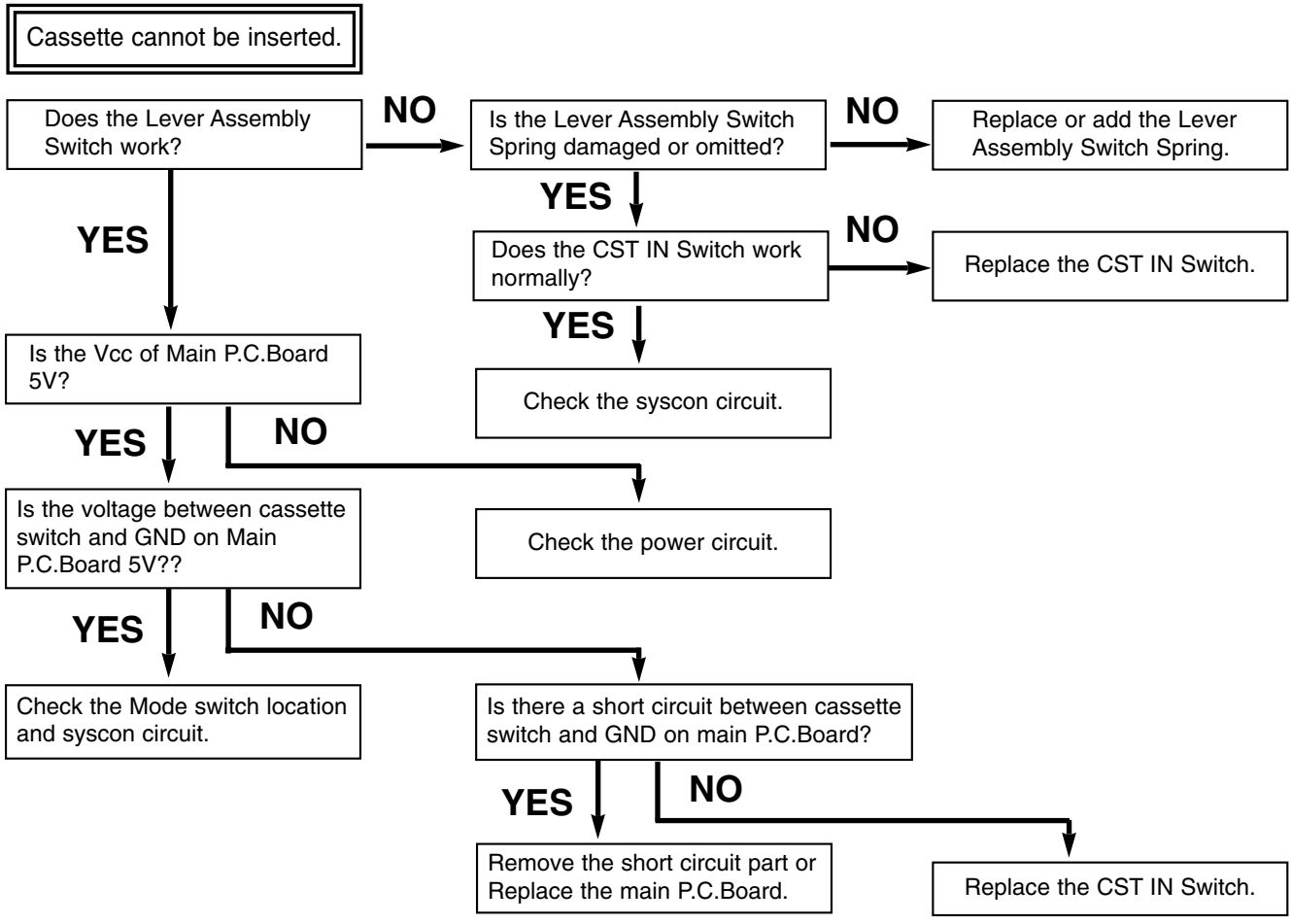

B.

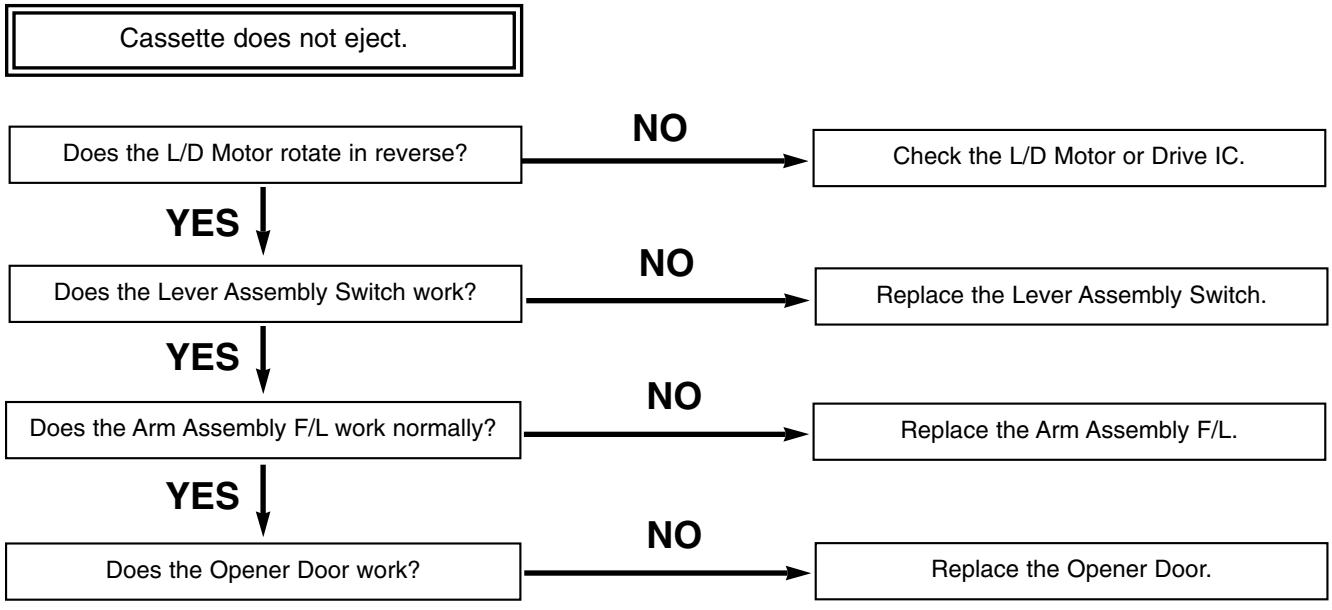

Download from Www.Somanuals.com. All Manuals Search And Download.

C.

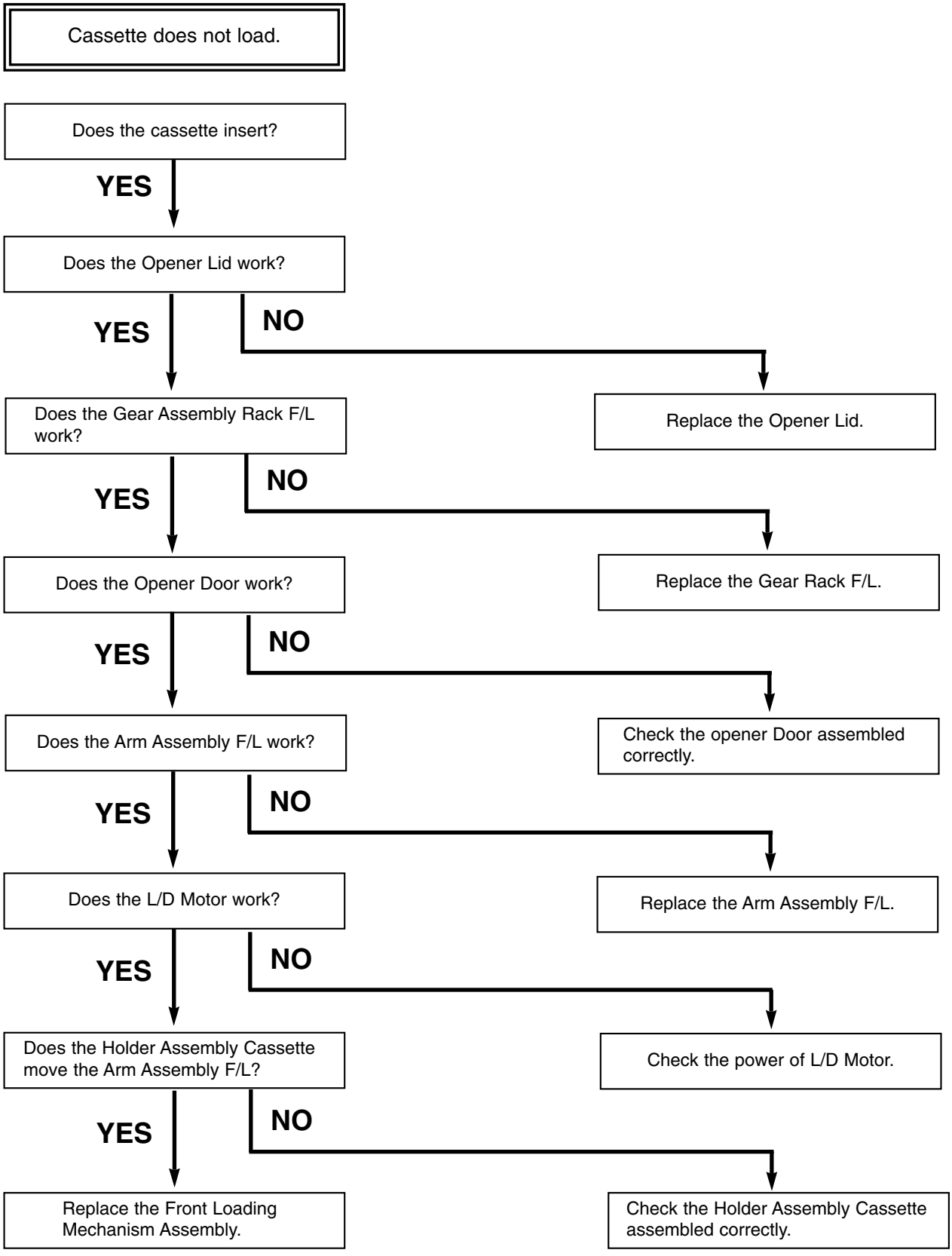

Download from Www.Somanuals.com. All Manuals Search And Download.

EXPLODED VIEWS

1. Front Loading Mechanism Section

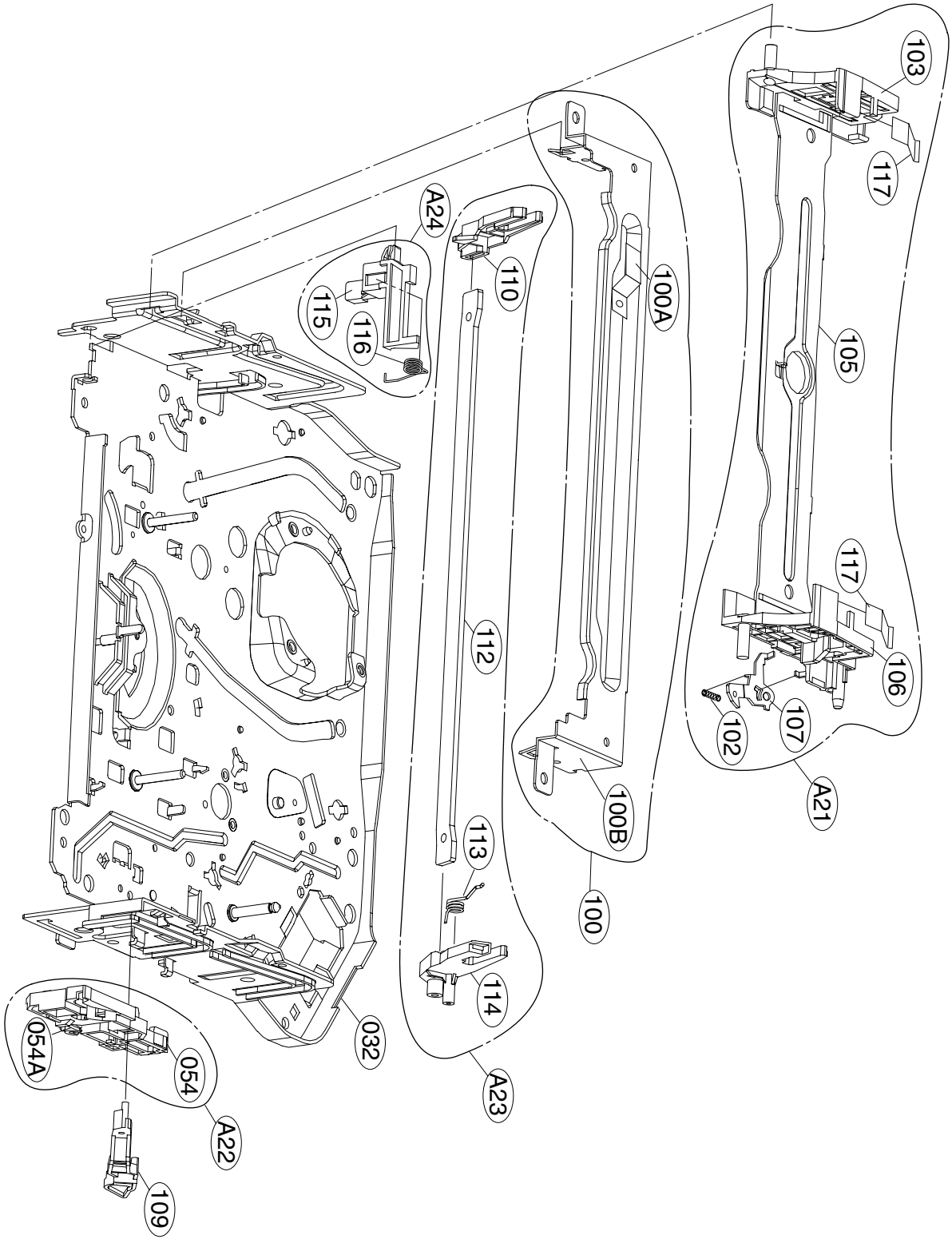

Download from Www.Somanuals.com. All Manuals Search And Download.

2. Moving Mechanism Section(1)

★ OPTIONAL PART

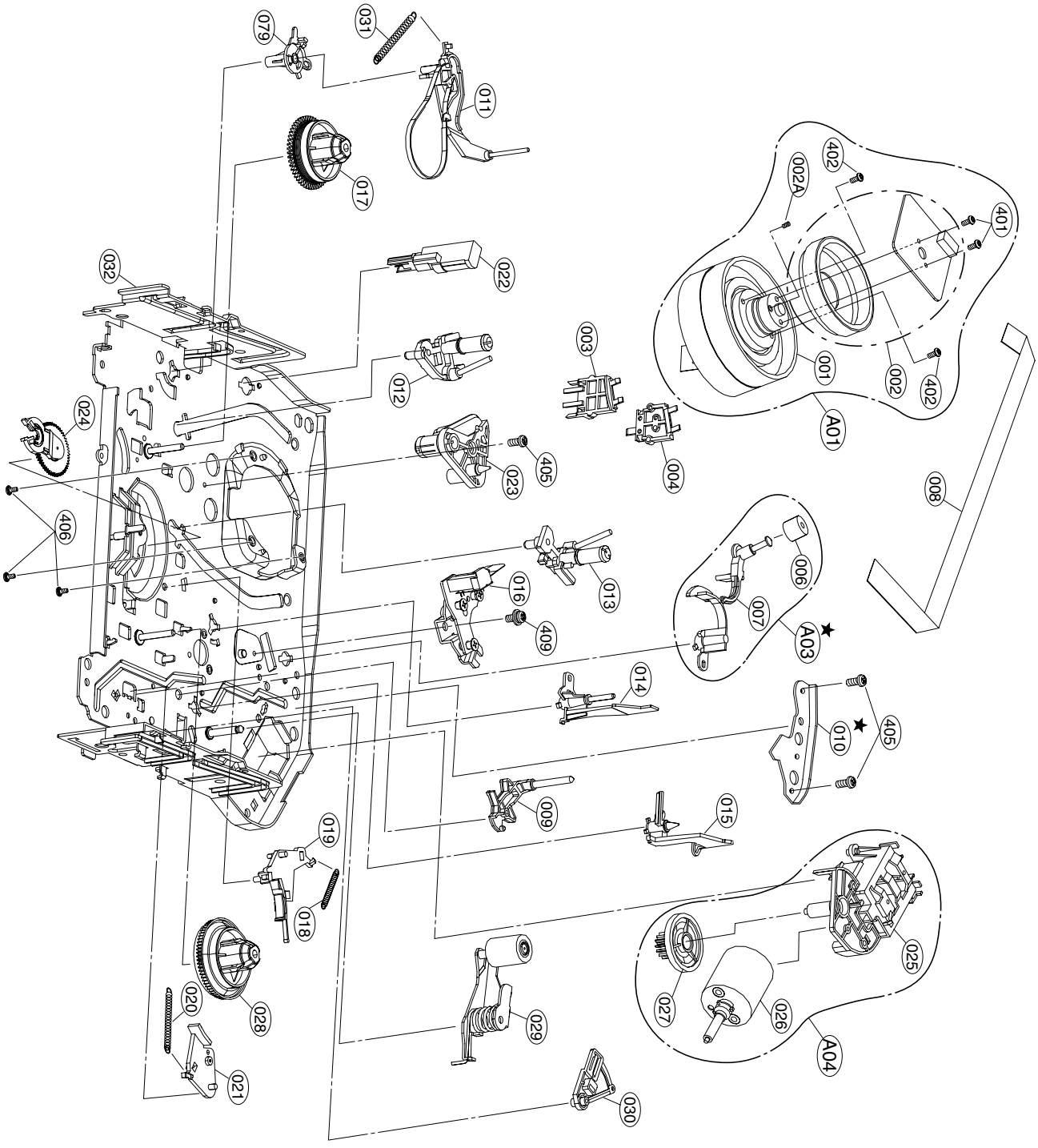

Download from Www.Somanuals.com. All Manuals Search And Download.

3. Moving Mechanism Section(2)

★ OPTIONAL PART

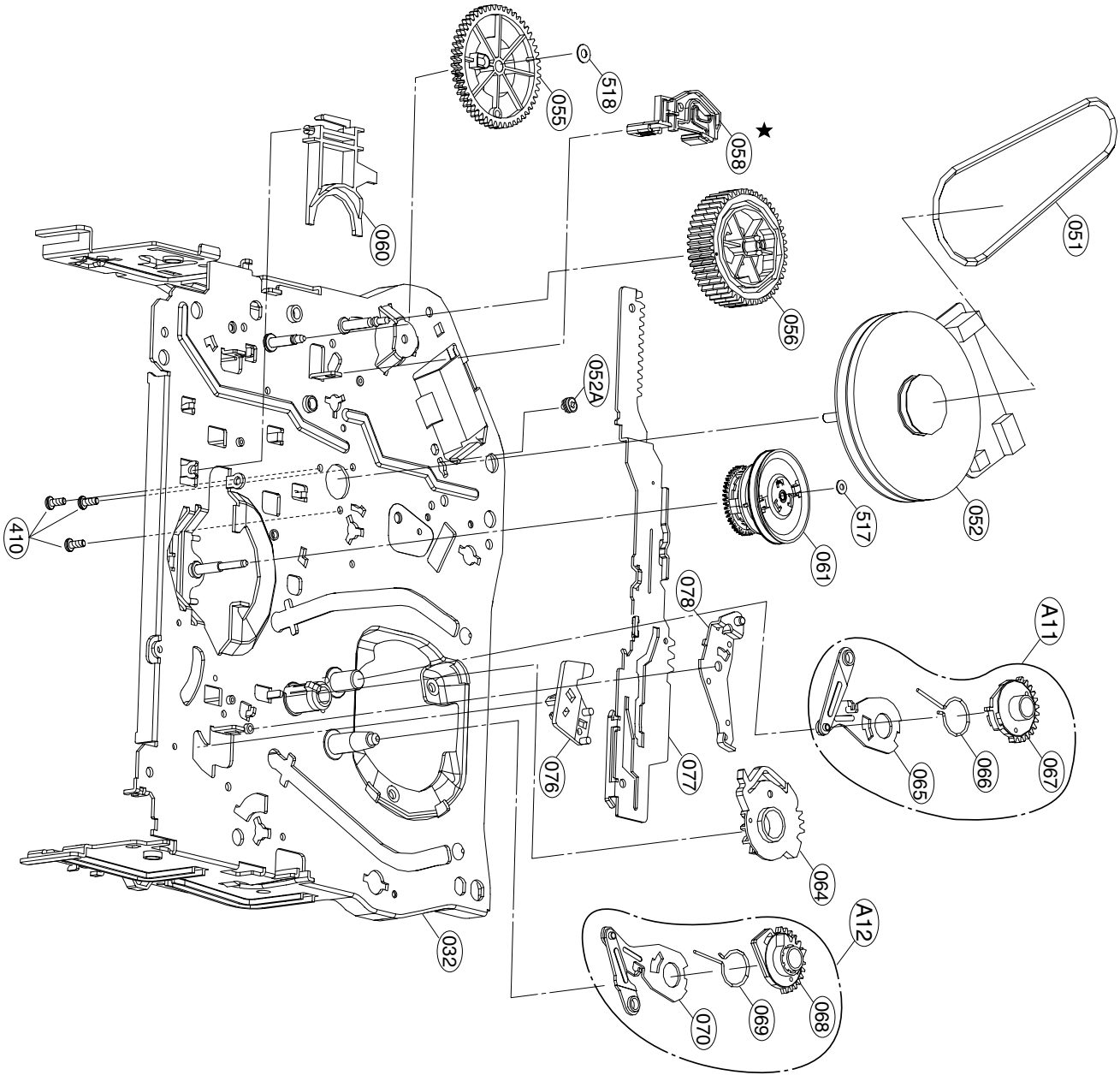

Download from Www.Somanuals.com. All Manuals Search And Download.

SECTION 5. REPLACEMENT PARTS LIST

NOTE: Warning
⚠ Parts that are shaded are critical With respect to risk of fire or electrical shock.

MODEL : NTH960N

NSP : Not Service Part

MECHANICAL SECTION

RUN DATE : 2004.05.01

S	AL	LOCA.NO	PART NO.	DESCRIPTION	SPECIFICATION	REMARKS
				ASSEMBLY PARTS SECTION		
		A00	6721R-0771U	DECK ASSEMBLY,VIDEO	DECK/MECHA D35 LG T/L (4HD(ALL	
		A01	6723R-D402G	DRUM(CIRC) ASSEMBLY	DECK/MECHA (8N4T) D35-4CH NTSC	
		A04	4811R-0038B	BRACKET ASSEMBLY	L/D	
		A11	4471R-0005A	GEAR ASSY	P3	
		A12	4471R-0004A	GEAR ASSY	P2	
		A21	4931R-0047A	HOLDER ASSY	CST	
		A22	4471R-0006A	GEAR ASSY	RACK F/L	
		A23	4261R-0023A	ARM ASSY	F/L	
		A24	4510R-0046A	LEVER	ASSY SWITCH	
				PARTS SECTION		
		001	6723R-D305G	DRUM(CIRC) ASSEMBLY	DECK/MECHA SUB D35-4CH NT (8N4	
		002	4680R-B008A	MOTOR(MECH)	DRUM VH4302-800 SANYO FOR D35K	
		002A	5202R00002C	BRUSH,CARBON	ASSY D33 (TIP+2 SPRING) 1.4,	
		003	4930R-0285A	HOLDER	FPCB(4CH)	
		004	5006R-0034A	CAP	FPC	
		008	6850R-HG18Z	CABLE,FLAT	P=1.25 FFC UL2896(0.05X0.8) 7	
		009	4260R-0038A	ARM	T/UP(D35)	
		011	4261R-0022A	ARM ASSY	TENSION(D35)	
		012	3041R-0037A	BASE ASSY	P2	
		013	3041R-0038A	BASE ASSY	P3	
		014	3041R-0039A	BASE ASSY	P4	
		015	5870R-0005A	OPENER	LID(D35)	
		016	3041R-0036A	BASE ASSEMBLY	A/C HEAD (ALPS)	
		017	4408R-0003A	REEL	S	
		018	4970R-0140A	SPRING	COIL RS D35	
		019	4421R-0008A	BRAKE ASSEMBLY	RS	
		020	4970R-0128A	SPRING	COIL D35 (TB)	
		021	4421R-0006A	BRAKE ASSY	T	
		022	6520D00002A	HEAD(CIRC)	D35 FE ST FE HEAD	
		023	3040R-0057A	BASE	LOADING	
		024	4261R-0024A	ARM ASSEMBLY	IDLER (H)	
		025	4810R-0111A	BRACKET	L/D	
		026	4680R-D006A	MOTOR(MECH)	LOADING RF-370CA-12560 MABUCHI	
		027	4470R-0093A	GEAR	DECK/MECHA WHEEL OTHER	
		028	4408R-0004A	REEL	T	
		029	4261R-0019E	ARM ASSEMBLY	DECK/MECHA PINCH	
		030	4510R-0043A	LEVER	T/UP	
		031	4970R-0123A	SPRING	COIL TENSION(D35)	
		032	3141R-0040A	CHASSIS ASSEMBLY	D35	
		051	4400R-0005A	BELT	CAPSTAN	
		052	4680R-A012B	MOTOR(MECH)	CAPSTAN MCVC-035TB LGIT FOR T/	
		052A	4980R-0023A	SUPPORTER	CAPSTAN(D35)	
		054	4470R-0100A	GEAR	RACK F/L	
		054A	4970R-0124B	SPRING	COIL D35 (RACK F/L)	
		055	4470R-0097A	GEAR	DRIVE(D35)	
		056	4470R-0096A	GEAR	CAM(D35)	
		058	4421R-0007A	BRAKE ASSY	CAPSTAN	
		060	4510R-0040A	LEVER	F/R(D35)	
		061	4265R-0005A	CLUTCH ASSEMBLY	D35 (M)	
		064	4470R-0098A	GEAR	SECTOR(D35)	
		065	4261R-0021A	ARM ASSY	P3	
		066	4970R-0122A	SPRING	COIL D35	
		067	4470R-0095A	GEAR	P3	
		068	4470R-0094A	GEAR	P2	
		069	4970R-0122A	SPRING	COIL D35	
		070	4261R-0020A	ARM ASSY	P2	
		076	4510R-0047A	LEVER	SPRING	
		077	3300R-M116A	PLATE	SLIDER	
		078	4510R-0041A	LEVER	TENSION	

Download from Www.Somanuals.com. All Manuals Search And Download.

S	AL	LOCA.NO	PART NO.	DESCRIPTION	SPECIFICATION	REMARKS
		079	3040R-0056A	BASE	TENSION(D35)	
		100	3301R-M022A	PLATE ASSEMBLY	TOP	
		102	4970R-0130A	SPRING	COIL D35 (STOPPER)	
		103	4930R-0276A	HOLDER	SIDE(L)	
		105	4930R-0274A	HOLDER	CST	
		106	4930R-0275A	HOLDER	SIDE(R)	
		107	4510R-0044A	LEVER	STOPPER	
		109	5870R-0004A	OPENER	DOOR	
		110	4260R-0035A	ARM	F/L(L)	
		112	3070R-0002A	BODY	F/L	
		113	4970R-0127A	SPRING	COIL D35 (F/L(R))	
		114	4260R-0036A	ARM	F/L(R)	
		115	4510R-0042A	LEVER	SWITCH	
		116	4970R-0138A	SPRING	COIL D35 SWITCH	
		117	3300R-M137A	PLATE	SPRING CST	
		116	4970R-0138A	SPRING	COIL D35 SWITCH	
		117	3300R-M137A	PLATE	SPRING CST	NSP
				SCREW		
		402	1MPC0261418	SCREW MACHINE,PAN HEAD	D 2.6 L 4.0 MSWR3/FZY	
		405	1SZZR-0031B	SCREW,DRAWING	+ 1 D2.6 L5.8 SWRCH16A/FZY TAP	
		406	1MEC0302018	PAN HEAD MACHINE SCREW S/W +	D 3.0 L 6.0 MSWR3/FZY	
		409	1SZZR-0032B	SCREW,DRAWING	+ 1 D2.6 L5.0 SWRCH18A/FZY TAP	
		410	1APF0262218	SCREW TAP TITE(B),PAN HEAD	#NAME?	
		452	353-051A	SCREW,DRAWING	SPECIAL	
		517	1WZZR-0004D	WASHER,DRAWING	STOPPER	
		518	1WZZR-0004A	WASHER,DRAWING	STOPPER	

Cabinet & Main Frame Section

S	AL	LOCA.NO.	PART NO	DESCRIPTION	SPECIFICATION	REMARKS
				ASSEMBLY SECTION		
		A00	6721R-0771U	DECK ASSEMBLY,VIDEO	DECK/MECHA D35 LG T/L (4HD(ALL	
		A42	6871RK5700K	PWB(PCB) ASSEMBLY,C/SKD	SNILN4T3526	
		A43	05503807	PANEL ASSEMBLY,FRONT	NTH960 C-TYPE	
		A44	3211RKS008B	FRAME ASSEMBLY	VCR MAIN(S008B) + PACKING	
		A45	3501RK3200B	BOARD ASSEMBLY	CCD TL-AT230	
				PARTS SECTION		
		250	3110R-S040F	CASE	LV-TL1960 2960 MOLD AIRHALL BA	
		260	3210R-0023A	FRAME	VCR - MAIN	
		277	4940R-Z075A	KNOB	SHUTTLE(TL-AR30M)	
		278	4940R-Z076B	KNOB	CCD TL-AT130 MOLD	
		280	3720R-F721D	PANEL,VIDEO	CCD LV-TL1960 S MOLD HIPS 40AF	
		281	524-013A	MAGNET	VCR - ASSY DOOR	
		283	50502527	DOOR	HRV30C	
		284	442-681A	SPRING	DOOR	
		285	4940R-Z086A	KNOB	CCD LV-TL124 MOLD	
		286	4940R-S017A	KNOB	SLIDE (LV-TL24)	
⚠		300	6410RZHV01A	POWER CORD	IT10S2(6A/250V) VOLEX IMMETRO	
		320	50502166	PANEL	NTH960C	
		323	3111R-0089B	CASE ASSY	PRE-AMP (PBSB-SH)	
		325	4930R-0190B	HOLDER ASSEMBLY	LCD PWB(ABS XR-401))	
		330	3550R-0210A	COVER	BOTTOM(LARGE)	
				SCREW		
		452	353-051A	SCREW,DRAWING	SPECIAL	
		457	353-051E	SCREW,DRAWING	SPECIAL (3X12)	
		462	353-136A	SCREW,DRAWING	SPECIAL(FBK) (353S353A)	

Packing & Accessory Section

S	AL	LOCA.NO.	PART NO	DESCRIPTION	SPECIFICATION	REMARKS
		801	3835RS0069N	INSTRUCTION ASSEMBLY	CCD TL-AT230M-AABBDL1_ENG_POR_	
		802	3890R-C065K	BOX,MASTER	TL-AT130M AABBDL . 1	
		803	3920R-E016A	PACKING	Packing LV-TL24I 0.02 0 EPS 10	
		804	3858R-S001A	SHEET (MECH)	Packing LDPE 600M 630MM 0.5 VC	
		808	534-008C	BATTERY,MANGANESE	AAAM(R03) SEOTONG 1-5 V - 1PA	
		900	6711R1P041H	REMOTE CONTROLLER ASSEMBLY	P9 LV-TL1960	

Download from Www.Somanuals.com. All Manuals Search And Download.

MODEL : NTH960 **RUN DATE : 2004.05.01**

Electrecal section

S	AL	LOCA.NO.	PART NO	DESCRIPTION	SPECIFICATION	REMARK
				BATTERY,LITHIUM		
		RB500	534-059AAAA	BATTERY,LITHIUM	LR6A-2S/ MATUSHITA - - LITHUM	
				BUZZER		
		BZ501	6908RB0001A	BUZZER	PKM24SP-3801 PKM24SP-3801 MURA	
		RL301	6920R-B201A	BUZZER	UT205-5SC YUYU AC 250 V 5-0 A	
				CAPACITOR		
		C101	624-088F	CAPACITOR,DRAWING	PCX2 275V 0.1UF,M (PILKO)	
		C102	624-088F	CAPACITOR,DRAWING	PCX2 275V 0.1UF,M (PILKO)	
		C103	624-082C	CAPACITOR,AL.ELECTROLYTIC	100MF/400V SHL SMPS S/Y	
		C105	0CQ1031Y519	CAPACITOR,FIXED FILM	0.01UF D 630V 10% PE NI TP5	
		C106	624-087A	CAPACITOR	HIGH-VOL 150P/1KV SMPS NEW-KOR	
		C109	624-085D	CAPACITOR	CE 47UF/50V KME (SMPS)	
		C111	0CN223AK948	CAPACITOR,TUBULAR(HIGH DIELEC)	0.022UF 50V Z F TA26 S	
		C112	0CG3320U630	CAPACITOR,SEMI CERAMIC	3300 PF 400V M E R(NK,AD,SD)	
		C113	0CG3310U510	CAPACITOR,FIXED CERAMIC(TEMP.C	330PF D 400V 10% B(Y5P) R	
		C114	0CQ4732K409	CAPACITOR,FIXED FILM	0.047UF S 50V 5% PE TP5	
		C116	0CE108BF630	CAPACITOR,FIXED ELECTROLYTIC	1000UF KME 16V M FM5 BULK	
		C117	624-082H	CAPACITOR	CE 1000UF/10V SHL(10*12.5)T/P	
		C118	0CE2276D638	CAPACITOR,FIXED ELECTROLYTIC	220M SMS 10V M FM5 TP(5)	
		C119	624-085D	CAPACITOR	CE 47UF/50V KME (SMPS)	
		C120	0CE477BH630	CAPACITOR,AL.ELECTROLYTIC	470UF KME TYPE 25V M FM5 BULK	
		C121	624-082G	CAPACITOR,FIXED ELECTROLYTIC	CE 470UF/25V SHL(10*12.5)T/P	
		C123	0CE337BJ610	CAPACITOR,FIXED ELECTROLYTIC	330UF KME TYPE 35V 20% FL BULK	
		C128	0CN223AK948	CAPACITOR,TUBULAR(HIGH DIELEC)	0.022UF 50V Z F TA26 S	
		C152	0CE1064F638	CAPACITOR,ELECTROLYTIC	10M SRA 16V M FM5 TP(5)	
		C153	0CE1064F638	CAPACITOR,ELECTROLYTIC	10M SRA 16V M FM5 TP(5)	
		C154	0CE1064F638	CAPACITOR,ELECTROLYTIC	10M SRA 16V M FM5 TP(5)	
		C155	0CE4754K638	CAPACITOR,FIXED ELECTROLYTIC	4.7UF SRA,SS 50V 20% FM5 TP 5	
		C170	0CE1044K638	CAPACITOR,ELECTROLYTIC	0.1M SRA 50V M FM5 TP(5)	
		C172	0CN1040K948	CAPACITOR,FIXED TUBULAR(HIGH D	0.1UF D 50V 80%,-20% F(Y5V) TA	
		C173	0CE4764J638	CAPACITOR,AL.ELECTROLYTIC	47UF SRA,SS 35V M FM5 TP 5	
		C301	0CN1040K948	CAPACITOR,FIXED TUBULAR(HIGH D	0.1UF D 50V 80%,-20% F(Y5V) TA	
		C302	0CN1030F678	CAPACITOR TUBULA(HIGH DIELE)	0.01M 16V M Y TA26	
		C303	0CE1054K638	CAPACITOR,ELECTROLYTIC	1.0M SRA/SS50V M FM5 TP(5)	
		C304	0CE2274C638	CAPACITOR,ELECTROLYTIC	220M SRA 6.3V M FM5 TP(5)	
		C305	0CN1040K948	CAPACITOR,FIXED TUBULAR(HIGH D	0.1UF D 50V 80%,-20% F(Y5V) TA	
		C306	0CN1030F678	CAPACITOR TUBULA(HIGH DIELE)	0.01M 16V M Y TA26	
		C307	0CX2700K408	CAPACITOR TUBULA(T.C)	27P 50V J SL TA26	
		C308	0CX3300K408	CAPACITOR TUBULA(T.C)	33P 50V J SL TA26	
		C309	0CN3310K518	CAPACITOR TUBULA(HIGH DIELE)	330P 50V K B TA26	
		C310	0CE4754K638	CAPACITOR,FIXED ELECTROLYTIC	4.7UF SRA,SS 50V 20% FM5 TP 5	
		C311	0CN1810K518	CAPACITOR,FIXED TUBULAR(High d	180P 50V K B TA26	
		C312	0CX2200K408	CAPACITOR TUBULA(T.C)	22P 50V J SL TP26	
		C313	0CN1010K418	CAPACITOR,TUBULAR(HIGH DIELEC)	100PF 50V J B TA26	
		C314	0CN1020K518	CAPACITOR TUBULA(HIGH DIELE)	1000P 50V K B TA26	
		C315	0CE1063F638	CAPACITOR,AL.ELECTROLYTIC	10M SRE/SE 16V M FM5 TP(5)	
		C316	0CE1063F638	CAPACITOR,AL.ELECTROLYTIC	10M SRE/SE 16V M FM5 TP(5)	
		C317	0CN1030F678	CAPACITOR TUBULA(HIGH DIELE)	0.01M 16V M Y TA26	
		C318	0CE2254K638	CAPACITOR,FIXED ELECTROLYTIC	2.2UF SRA,SS 50V 20% FM5 TP 5	
		C319	0CN1040K948	CAPACITOR,FIXED TUBULAR(HIGH D	0.1UF D 50V 80%,-20% F(Y5V) TA	
		C322	0CE4764F638	CAPACITOR,ELECTROLYTIC	47M SRA/SS 16V M FM5 TP(5)	
		C323	0CE4764F638	CAPACITOR,ELECTROLYTIC	47M SRA/SS 16V M FM5 TP(5)	
		C324	0CN1040K948	CAPACITOR,FIXED TUBULAR(HIGH D	0.1UF D 50V 80%,-20% F(Y5V) TA	
		C325	0CN1050K948	CAPACITOR,TUBULAR(HIGH DIELEC)	1UF 50V Z F TA26 D	
		C326	0CE1063F638	CAPACITOR,AL.ELECTROLYTIC	10M SRE/SE 16V M FM5 TP(5)	
		C327	0CE1063F638	CAPACITOR,AL.ELECTROLYTIC	10M SRE/SE 16V M FM5 TP(5)	
		C328	0CN223AK948	CAPACITOR,TUBULAR(HIGH DIELEC)	0.022UF 50V Z F TA26 S	
		C329	0CN223AK948	CAPACITOR,TUBULAR(HIGH DIELEC)	0.022UF 50V Z F TA26 S	
		C330	0CN1030F678	CAPACITOR TUBULA(HIGH DIELE)	0.01M 16V M Y TA26	
		C331	0CE2274C638	CAPACITOR,ELECTROLYTIC	220M SRA 6.3V M FM5 TP(5)	

Download from Www.Somanuals.com. All Manuals Search And Download.

S	AL	LOCA.NO.	PART NO	DESCRIPTION	SPECIFICATION	REMARK
		C332	0CN1030F678	CAPACITOR TUBULA(HIGH DIELE)	0.01M 16V M Y TA26	
		C333	0CN1040K948	CAPACITOR,FIXED TUBULAR(HIGH D	0.1UF D 50V 80%,-20% F(Y5V) TA	
		C334	0CN223AK948	CAPACITOR,TUBULAR(HIGH DIELEC)	0.022UF 50V Z F TA26 S	
		C336	0CN1030F678	CAPACITOR TUBULA(HIGH DIELE)	0.01M 16V M Y TA26	
		C337	0CE4754K638	CAPACITOR,FIXED ELECTROLYTIC	4.7UF SRA,SS 50V 20% FM5 TP 5	
		C338	0CN223AK948	CAPACITOR,TUBULAR(HIGH DIELEC)	0.022UF 50V Z F TA26 S	
		C339	0CE1054K638	CAPACITOR,ELECTROLYTIC	1.0M SRA/SS50V M FM5 TP(5)	
		C340	0CN3330K518	CAPACITOR,FIXED TUBULAR(High d	0.033UF 50V K B TA26	
		C341	0CN223AK948	CAPACITOR,TUBULAR(HIGH DIELEC)	0.022UF 50V Z F TA26 S	
		C343	0CN4730K948	CAPACITOR,FIXED TUBULAR(High d	0.047UF D 50V 80%,-20% F(Y5V)	
		C344	0CN1040K948	CAPACITOR,FIXED TUBULAR(HIGH D	0.1UF D 50V 80%,-20% F(Y5V) TA	
		C345	0CN1040K948	CAPACITOR,FIXED TUBULAR(HIGH D	0.1UF D 50V 80%,-20% F(Y5V) TA	
		C346	0CE2274C638	CAPACITOR,ELECTROLYTIC	220M SRA 6.3V M FM5 TP(5)	
		C348	0CN1030F678	CAPACITOR TUBULA(HIGH DIELE)	0.01M 16V M Y TA26	
		C349	0CN223AK948	CAPACITOR,TUBULAR(HIGH DIELEC)	0.022UF 50V Z F TA26 S	
		C354	0CE2274C638	CAPACITOR,ELECTROLYTIC	220M SRA 6.3V M FM5 TP(5)	
		C355	0CN1030F678	CAPACITOR TUBULA(HIGH DIELE)	0.01M 16V M Y TA26	
		C358	0CE1054K638	CAPACITOR,ELECTROLYTIC	1.0M SRA/SS50V M FM5 TP(5)	
		C360	0CC0500K015	CAPACITOR,CERAMIC(TEMP COMP)	5P 50V C NP0 TR	
		C368	0CN1020K518	CAPACITOR TUBULA(HIGH DIELE)	1000P 50V K B TA26	
		C369	0CN1040K948	CAPACITOR,FIXED TUBULAR(HIGH D	0.1UF D 50V 80%,-20% F(Y5V) TA	
		C375	0CN1040K948	CAPACITOR,FIXED TUBULAR(HIGH D	0.1UF D 50V 80%,-20% F(Y5V) TA	
		C377	0CE1044K638	CAPACITOR,ELECTROLYTIC	0.1M SRA 50V M FM5 TP(5)	
		C380	0CN223AK948	CAPACITOR,TUBULAR(HIGH DIELEC)	0.022UF 50V Z F TA26 S	
		C381	0CE4764F638	CAPACITOR,ELECTROLYTIC	47M SRA/SS 16V M FM5 TP(5)	
		C384	0CE4774C638	CAPACITOR,FIXED ELECTROLYTIC	470UF SRA,SS 6.3V 20% FM5 TP 5	
		C386	0CN223AK948	CAPACITOR,TUBULAR(HIGH DIELEC)	0.022UF 50V Z F TA26 S	
		C3B1	0CN3330K518	CAPACITOR,FIXED TUBULAR(High d	0.033UF 50V K B TA26	
		C3G1	0CN223AK948	CAPACITOR,TUBULAR(HIGH DIELEC)	0.022UF 50V Z F TA26 S	
		C3G2	0CE4764F638	CAPACITOR,ELECTROLYTIC	47M SRA/SS 16V M FM5 TP(5)	
		C3G3	0CN3320F668	CAPACITOR,TUBULAR(HIGH DIELEC)	3300P 16V M TA26	
		C3G4	0CN4730K948	CAPACITOR,FIXED TUBULAR(High d	0.047UF D 50V 80%,-20% F(Y5V)	
		C3G5	0CE4754K638	CAPACITOR,FIXED ELECTROLYTIC	4.7UF SRA,SS 50V 20% FM5 TP 5	
		C3G6	0CE4754K638	CAPACITOR,FIXED ELECTROLYTIC	4.7UF SRA,SS 50V 20% FM5 TP 5	
		C3G7	0CE4754K638	CAPACITOR,FIXED ELECTROLYTIC	4.7UF SRA,SS 50V 20% FM5 TP 5	
		C3G8	0CN1030F678	CAPACITOR TUBULA(HIGH DIELE)	0.01M 16V M Y TA26	
		C3G9	0CN223AK948	CAPACITOR,TUBULAR(HIGH DIELEC)	0.022UF 50V Z F TA26 S	
		C401	0CE4764F638	CAPACITOR,ELECTROLYTIC	47M SRA/SS 16V M FM5 TP(5)	
		C402	0CN223AK948	CAPACITOR,TUBULAR(HIGH DIELEC)	0.022UF 50V Z F TA26 S	
		C403	0CN1040K948	CAPACITOR,FIXED TUBULAR(HIGH D	0.1UF D 50V 80%,-20% F(Y5V) TA	
		C405	0CE1063F638	CAPACITOR,AL.ELECTROLYTIC	10M SRE/SE 16V M FM5 TP(5)	
		C406	0CE1063F638	CAPACITOR,AL.ELECTROLYTIC	10M SRE/SE 16V M FM5 TP(5)	
		C410	0CN1040K948	CAPACITOR,FIXED TUBULAR(HIGH D	0.1UF D 50V 80%,-20% F(Y5V) TA	
		C412	0CN1040K948	CAPACITOR,FIXED TUBULAR(HIGH D	0.1UF D 50V 80%,-20% F(Y5V) TA	
		C413	0CQ1032K409	CAPACITOR,FIXED FILM	0.01UF S 50V 5% PE TP5	
		C414	0CQ1032K409	CAPACITOR,FIXED FILM	0.01UF S 50V 5% PE TP5	
		C415	0CE2264F638	CAPACITOR,FIXED ELECTROLYTIC	22UF SRA,SS 16V 20% FM5 TP 5	
		C416	0CN2220F668	CAPACITOR,TUBULAR(HIGH DIELEC)	2200P 16V M X TA26	
		C417	0CN1820F668	CAPACITOR TUBULA(HIGH DIELE)	1800P 16V M X TA26	
		C418	0CQ1532K409	CAPACITOR,FIXED FILM	0.015UF S 50V 5% PE TP5	
		C419	0CQ1032K409	CAPACITOR,FIXED FILM	0.01UF S 50V 5% PE TP5	
		C420	0CE4765K618	CAPACITOR,AL.ELECTROLYTIC	47UF SR,SV 50V M FL TP 5	
		C421	0CQ2232L559	CAPACITOR,FIXED FILM	0.022UF S 63V 10% PP NI TP5	
		C424	0CN1040K948	CAPACITOR,FIXED TUBULAR(HIGH D	0.1UF D 50V 80%,-20% F(Y5V) TA	
		C431	0CN1030F678	CAPACITOR TUBULA(HIGH DIELE)	0.01M 16V M Y TA26	
		C466	0CE3354K638	CAPACITOR,FIXED ELECTROLYTIC	3.3UF SRA,SS 50V 20% FM5 TP 5	
		C480	0CE4754K638	CAPACITOR,FIXED ELECTROLYTIC	4.7UF SRA,SS 50V 20% FM5 TP 5	
		C490	0CE1054K638	CAPACITOR,ELECTROLYTIC	1.0M SRA/SS50V M FM5 TP(5)	
		C501	0CN1040K948	CAPACITOR,FIXED TUBULAR(HIGH D	0.1UF D 50V 80%,-20% F(Y5V) TA	
		C502	0CE4764C638	CAPACITOR,ELECTROLYTIC	47M SRA 6.3V M FM5 TP(5)	

Download from Www.Somanuals.com. All Manuals Search And Download.

S	AL	LOCA.NO.	PART NO	DESCRIPTION	SPECIFICATION	REMARK
		C503	0CE4774C638	CAPACITOR,FIXED ELECTROLYTIC	470UF SRA,SS 6.3V 20% FM5 TP 5	
		C505	0CE1074F638	CAPACITOR,ELECTROLYTIC	100U SRA 16V M FM5 TP(5)	
		C507	0CN1030F678	CAPACITOR TUBULA(HIGH DIELE)	0.01M 16V M Y TA26	
		C509	0CN223AK948	CAPACITOR,TUBULAR(HIGH DIELEC)	0.022UF 50V Z F TA26 S	
		C510	0CN1030F678	CAPACITOR TUBULA(HIGH DIELE)	0.01M 16V M Y TA26	
		C514	0CC1500K415	CAPACITOR,CERAMIC(TEMP COMP)	15P 50V J NP0 TS	
		C515	0CC1200K415	CAPACITOR,FIXED CERAMIC(TEMP.C	12PF D 50V 5% TR NP0	
		C516	0CE1054K636	CAPACITOR,ELECTROLYTIC	1.0U SRA 50V M FM5 BP TP(D)	
		C517	0CE4774C638	CAPACITOR,FIXED ELECTROLYTIC	470UF SRA,SS 6.3V 20% FM5 TP 5	
		C520	0CN1030F678	CAPACITOR TUBULA(HIGH DIELE)	0.01M 16V M Y TA26	
		C521	0CN1040K948	CAPACITOR,FIXED TUBULAR(HIGH D	0.1UF D 50V 80%,-20% F(Y5V) TA	
		C522	0CN1030F678	CAPACITOR TUBULA(HIGH DIELE)	0.01M 16V M Y TA26	
		C525	0CN223AK948	CAPACITOR,TUBULAR(HIGH DIELEC)	0.022UF 50V Z F TA26 S	
		C526	0CE4764J638	CAPACITOR,AL.ELECTROLYTIC	47UF SRA,SS 35V M FM5 TP 5	
		C528	0CN1030F678	CAPACITOR TUBULA(HIGH DIELE)	0.01M 16V M Y TA26	
		C529	0CN1040K948	CAPACITOR,FIXED TUBULAR(HIGH D	0.1UF D 50V 80%,-20% F(Y5V) TA	
		C530	0CE4764C638	CAPACITOR,ELECTROLYTIC	47M SRA 6.3V M FM5 TP(5)	
		C534	0CE4754K638	CAPACITOR,FIXED ELECTROLYTIC	4.7UF SRA,SS 50V 20% FM5 TP 5	
		C535	0CE4754K638	CAPACITOR,FIXED ELECTROLYTIC	4.7UF SRA,SS 50V 20% FM5 TP 5	
		C540	0CE4764F638	CAPACITOR,ELECTROLYTIC	47M SRA/SS 16V M FM5 TP(5)	
		C541	0CE4754K638	CAPACITOR,FIXED ELECTROLYTIC	4.7UF SRA,SS 50V 20% FM5 TP 5	
		C542	0CN6810K518	CAPACITOR TUBULA(HIGH DIELE)	680P 50V K B TA26	
		C543	0CN2220F668	CAPACITOR,TUBULAR(HIGH DIELEC)	2200P 16V M X TA26	
		C544	0CQ3332K409	CAPACITOR,FIXED FILM	0.033UF S 50V 5% PE TP5	
		C545	0CN2220F668	CAPACITOR,TUBULAR(HIGH DIELEC)	2200P 16V M X TA26	
		C546	0CE4764H638	CAPACITOR,FIXED ELECTROLYTIC	47M SRA 25V M FM5 TP(5)	
		C551	0CQ4732K409	CAPACITOR,FIXED FILM	0.047UF S 50V 5% PE TP5	
		C552	0CN1030F678	CAPACITOR TUBULA(HIGH DIELE)	0.01M 16V M Y TA26	
		C554	0CN1040K948	CAPACITOR,FIXED TUBULAR(HIGH D	0.1UF D 50V 80%,-20% F(Y5V) TA	
		C555	0CE2264F638	CAPACITOR,FIXED ELECTROLYTIC	22UF SRA,SS 16V 20% FM5 TP 5	
		C557	0CN1040K948	CAPACITOR,FIXED TUBULAR(HIGH D	0.1UF D 50V 80%,-20% F(Y5V) TA	
		C561	0CE4764C638	CAPACITOR,ELECTROLYTIC	47M SRA 6.3V M FM5 TP(5)	
		C567	0CN1020K518	CAPACITOR TUBULA(HIGH DIELE)	1000P 50V K B TA26	
		C570	0CC1200K415	CAPACITOR,FIXED CERAMIC(TEMP.C	12PF D 50V 5% TR NP0	
		C571	0CC1500K415	CAPACITOR,CERAMIC(TEMP COMP)	15P 50V J NP0 TS	
		C573	0CN5610K518	CAPACITOR TUBULA(HIGH DIELE)	560P 50V K B TA26	
		C574	0CN1020K518	CAPACITOR TUBULA(HIGH DIELE)	1000P 50V K B TA26	
		C576	0CE2264F638	CAPACITOR,FIXED ELECTROLYTIC	22UF SRA,SS 16V 20% FM5 TP 5	
		C581	0CN1030F678	CAPACITOR TUBULA(HIGH DIELE)	0.01M 16V M Y TA26	
		C582	0CN1030F678	CAPACITOR TUBULA(HIGH DIELE)	0.01M 16V M Y TA26	
		C583	0CN1040K948	CAPACITOR,FIXED TUBULAR(HIGH D	0.1UF D 50V 80%,-20% F(Y5V) TA	
		C584	0CE1054K636	CAPACITOR,ELECTROLYTIC	1.0U SRA 50V M FM5 BP TP(D)	
		C5F1	0CE4766K638	CAPACITOR,ELECTROLYTIC	47M SMS 50V M FM5 TP	
		C5F2	0CE4766K638	CAPACITOR,ELECTROLYTIC	47M SMS 50V M FM5 TP	
		C6F3	0CE4764C638	CAPACITOR,ELECTROLYTIC	47M SRA 6.3V M FM5 TP(5)	
		C6F4	0CN1030F678	CAPACITOR TUBULA(HIGH DIELE)	0.01M 16V M Y TA26	
		C6F5	0CN1030F678	CAPACITOR TUBULA(HIGH DIELE)	0.01M 16V M Y TA26	
		C6F8	0CE4766K638	CAPACITOR,ELECTROLYTIC	47M SMS 50V M FM5 TP	
		C5K0	0CN1030F678	CAPACITOR TUBULA(HIGH DIELE)	0.01M 16V M Y TA26	
		C5K1	0CN1030F678	CAPACITOR TUBULA(HIGH DIELE)	0.01M 16V M Y TA26	
		C5K2	0CN1030F678	CAPACITOR TUBULA(HIGH DIELE)	0.01M 16V M Y TA26	
		C6R1	0CE4764C638	CAPACITOR,ELECTROLYTIC	47M SRA 6.3V M FM5 TP(5)	
		C601	0CN1030F678	CAPACITOR TUBULA(HIGH DIELE)	0.01M 16V M Y TA26	
		C602	0CN1030F678	CAPACITOR TUBULA(HIGH DIELE)	0.01M 16V M Y TA26	
		C603	0CN1030F678	CAPACITOR TUBULA(HIGH DIELE)	0.01M 16V M Y TA26	
		C604	0CN1030F678	CAPACITOR TUBULA(HIGH DIELE)	0.01M 16V M Y TA26	
		C605	0CN1030F678	CAPACITOR TUBULA(HIGH DIELE)	0.01M 16V M Y TA26	
		C901	0CN1020K518	CAPACITOR TUBULA(HIGH DIELE)	1000P 50V K B TA26	
		C902	0CN1020K518	CAPACITOR TUBULA(HIGH DIELE)	1000P 50V K B TA26	
		C903	0CN1020K518	CAPACITOR TUBULA(HIGH DIELE)	1000P 50V K B TA26	
		C904	0CN1020K518	CAPACITOR TUBULA(HIGH DIELE)	1000P 50V K B TA26	

Download from Www.Somanuals.com. All Manuals Search And Download.

S	AL	LOCA.NO.	PART NO	DESCRIPTION	SPECIFICATION	REMARK
		C906	0CN223AK948	CAPACITOR,TUBULAR(HIGH DIELEC)	0.022UF 50V Z F TA26 S	
		C907	0CE4764F638	CAPACITOR,ELECTROLYTIC	47M SRA/SS 16V M FM5 TP(5)	
		C908	0CE1054K638	CAPACITOR,ELECTROLYTIC	1.0M SRA/SS50V M FM5 TP(5)	
		C909	0CE1054K638	CAPACITOR,ELECTROLYTIC	1.0M SRA/SS50V M FM5 TP(5)	
		C910	0CE1054K638	CAPACITOR,ELECTROLYTIC	1.0M SRA/SS50V M FM5 TP(5)	
		C911	0CE1054K638	CAPACITOR,ELECTROLYTIC	1.0M SRA/SS50V M FM5 TP(5)	
		C917	0CN223AK948	CAPACITOR,TUBULAR(HIGH DIELEC)	0.022UF 50V Z F TA26 S	
		C918	0CE4754K638	CAPACITOR,FIXED ELECTROLYTIC	4.7UF SRA,SS 50V 20% FM5 TP 5	
		C919	0CE1064F638	CAPACITOR,ELECTROLYTIC	10M SRA 16V M FM5 TP(5)	
		C921	0CE1074F638	CAPACITOR,ELECTROLYTIC	100U SRA 16V M FM5 TP(5)	
		C922	0CX2700K408	CAPACITOR TUBULA(T.C)	27P 50V J SL TA26	
		C923	0CE2264F638	CAPACITOR,FIXED ELECTROLYTIC	22UF SRA,SS 16V 20% FM5 TP 5	
		C924	0CE4774C638	CAPACITOR,FIXED ELECTROLYTIC	470UF SRA,SS 6.3V 20% FM5 TP 5	
				COIL		
		FL401	633-032K	COIL,IFT	NON BIAC OSC,1CHIP 5V(KS-75M)	
		L103	633-088G	COIL,CHOKE	22MH TOKO 5MM TP	
		L104	633-088G	COIL,CHOKE	22MH TOKO 5MM TP	
		L301	0LR1800K035	INDUCTOR RADIAL LEAD	180M K 6X6 L5 TP	
		L302	0LA0472K018	INDUCTOR AXIAL LEAD	47M K 2.3X3.4 L5 TP	
		L303	0LA1200K018	INDUCTOR AXIAL LEAD	120M K 2.3X3.4 L5 TP	
		L304	0LR4700K035	INDUCTOR RADIAL LEAD	470M K 6X6 L5 TP	
		L306	0LR2200K035	INDUCTOR RADIAL LEAD	220M K 6X6 L5 TP	
		L307	0LR4700K035	INDUCTOR RADIAL LEAD	470M K 6X6 L5 TP	
		L309	0LR2700J025	INDUCTOR,RADIAL LEAD	270UH 5% 4X5 TR5	
		L380	0LR1000K035	INDUCTOR RADIAL LEAD	100M K 6X6 L5 TP	
		L3G1	0LR1000K035	INDUCTOR RADIAL LEAD	100M K 6X6 L5 TP	
		L401	0LR1000K035	INDUCTOR RADIAL LEAD	100M K 6X6 L5 TP	
		L405	0LR1000K035	INDUCTOR RADIAL LEAD	100M K 6X6 L5 TP	
		L503	0LR1000K035	INDUCTOR RADIAL LEAD	100M K 6X6 L5 TP	
		L504	0LA1000K018	INDUCTOR AXIAL LEAD	100M K 2.3X3.4 L5 TP	
		L505	0LR1000K035	INDUCTOR RADIAL LEAD	100M K 6X6 L5 TP	
		L901	0LA1000K018	INDUCTOR AXIAL LEAD	100M K 2.3X3.4 L5 TP	
		L902	0LA1000K018	INDUCTOR AXIAL LEAD	100M K 2.3X3.4 L5 TP	
		L904	0LR1000K035	INDUCTOR RADIAL LEAD	100M K 6X6 L5 TP	
				DIODE		
		BD101	0DD160000DA	DIODE,RECTIFIERS	S1WBA60 BK SHINDENGEN - 600V -	
		D102	0DD010009CA	DIODE,RECTIFIERS	EG01C TP SANKEN - - - - - -	
		D103	0DR180209AA	DIODE,RECTIFIERS	ERA18-02KFRB TP FUJI DO204AL 2	
		D106	0DR158220AA	DIODE,RECTIFIERS	1N5822 BK RECTRON DO201AD 40V	
		D107	0DR180209AA	DIODE,RECTIFIERS	ERA18-02KFRB TP FUJI DO204AL 2	
		D108	0DD010009AC	DIODE,RECTIFIERS	EU01W(R-FORM) TP SANKEN	
		D109	0DR302000AB	DIODE,RECTIFIERS	HER302 BK RECTRON DO201AD 100V	
		D110	0DD010009AC	DIODE,RECTIFIERS	EU01W(R-FORM) TP SANKEN	
		D154	0DD207000AB	DIODE,RECTIFIERS	2A07 2A RECT(T/S)P=12.5 F DELT	
		D155	0DD207000AB	DIODE,RECTIFIERS	2A07 2A RECT(T/S)P=12.5 F DELT	
		D156	0DD207000AB	DIODE,RECTIFIERS	2A07 2A RECT(T/S)P=12.5 F DELT	
		D158	0DR104009AB	DIODE,RECTIFIERS	RL104 R. TP GULF SEMICONDUCTOR	
		D159	0DR104009AB	DIODE,RECTIFIERS	RL104 R. TP GULF SEMICONDUCTOR	
		D161	0DR104009AB	DIODE,RECTIFIERS	RL104 R. TP GULF SEMICONDUCTOR	
		D301	0DD133009AA	DIODE,SWITCHING	1SS133 DETECT,SW TP	
		D380	0DD133009AA	DIODE,SWITCHING	1SS133 DETECT,SW TP	
		D401	0DD133009AA	DIODE,SWITCHING	1SS133 DETECT,SW TP	
		D402	0DD133009AA	DIODE,SWITCHING	1SS133 DETECT,SW TP	
		D403	0DD133009AA	DIODE,SWITCHING	1SS133 DETECT,SW TP	
		D501	0DD133009AA	DIODE,SWITCHING	1SS133 DETECT,SW TP	
		D510	0DD133009AA	DIODE,SWITCHING	1SS133 DETECT,SW TP	
		D511	0DD133009AA	DIODE,SWITCHING	1SS133 DETECT,SW TP	
		D5F6	0DD133009AA	DIODE,SWITCHING	1SS133 DETECT,SW TP	
		D901	0DD133009AA	DIODE,SWITCHING	1SS133 DETECT,SW TP	
		D902	0DD133009AA	DIODE,SWITCHING	1SS133 DETECT,SW TP	

Download from Www.Somanuals.com. All Manuals Search And Download.

S	AL	LOCA.NO.	PART NO	DESCRIPTION	SPECIFICATION	REMARK
		D903	0DD133009AA	DIODE,SWITCHING	1SS133 DETECT,SW TP	
		D904	0DD133009AA	DIODE,SWITCHING	1SS133 DETECT,SW TP	
		D905	0DD133009AA	DIODE,SWITCHING	1SS133 DETECT,SW TP	
				DIGITRON		
		DG601	6302R-V106A	DIGITRON	9MT-173GNK FUTABA UNIVERSAL LV	
				FILTER		
		BC101	636-004C	FILTER(CIRC),EMC	BEAD CORE BFS3550R2FD8,R T/P	
		BD901	636-004C	FILTER(CIRC),EMC	BEAD CORE BFS3550R2FD8,R T/P	
		BD902	636-004C	FILTER(CIRC),EMC	BEAD CORE BFS3550R2FD8,R T/P	
		BD903	636-004C	FILTER(CIRC),EMC	BEAD CORE BFS3550R2FD8,R T/P	
		BD904	636-004C	FILTER(CIRC),EMC	BEAD CORE BFS3550R2FD8,R T/P	
		BD905	636-004C	FILTER(CIRC),EMC	BEAD CORE BFS3550R2FD8,R T/P	
		BD906	636-004C	FILTER(CIRC),EMC	BEAD CORE BFS3550R2FD8,R T/P	
		BD907	636-004C	FILTER(CIRC),EMC	BEAD CORE BFS3550R2FD8,R T/P	
		BD908	636-004C	FILTER(CIRC),EMC	BEAD CORE BFS3550R2FD8,R T/P	
		BD909	636-004C	FILTER(CIRC),EMC	BEAD CORE BFS3550R2FD8,R T/P	
		BD910	636-004C	FILTER(CIRC),EMC	BEAD CORE BFS3550R2FD8,R T/P	
		BD911	636-004C	FILTER(CIRC),EMC	BEAD CORE BFS3550R2FD8,R T/P	
		BD922	636-004C	FILTER(CIRC),EMC	BEAD CORE BFS3550R2FD8,R T/P	
		L102	616-145H	FILTER(CIRC),DRAWING	SHT LFS2020V4-04350	
		W1A2	636-004C	FILTER(CIRC),EMC	BEAD CORE BFS3550R2FD8,R T/P	
				FUSE		
⚠		F101	0FS1601B51B	FUSE,SLOW BLOW	1600MA 250 V 5.2X20 CY/GL KS /	
				HOLDER		
		ES501	4931R-0050A	HOLDER ASSY	END	
		ES502	4931R-0050A	HOLDER ASSY	END	
		FH01	586-008B	HOLDER	FUSE CLIP TP SINSUNG	
		FH02	586-008B	HOLDER	FUSE CLIP TP SINSUNG	
		LD501	4931R-0017A	HOLDER ASSEMBLY	MV995A NON LED	
				IC		
		F104	GIRH100000B	IC,ROHM	ICP-N10 T104 TP IC DETACT	
⚠		IC101	0ISK615300A	IC,SANKEN	STR-G6153T 5PIN FM CUT BK PWM	
		IC103	0ISS431000A	IC,SAMSUNG ELECTRONICS	KA431AZ (LM431AZ)	
		IC301	0ISA715820A	IC,SANYO	LA71582M 100QFP BK AVCP TIMELA	
		IC3G1	0IMA391600A	IC,MATSUSHITA	AN3916 SDIP ST AGC IC	
		IC501	0IMCRMA024B	IC,MICRO CONTROLLER	MN101D06F LE 2ND MATSUSHITA 10	
		IC503	0ICS241600B	IC,CATALYST	CAT24WC16P 8P DIP ST 16K SERIA	
		IC505	0IKE704200B	IC,KEC	KIA7042P 3P 4.2V RESET(TAPING)	
		IC6F1	0IPRPPY002A	IC,PERIPHERALS	PT6315 PTC 44 LQFP TRAY VFD DR	
		IC901	0IJR641300A	IC,JRC	NJU6413AD 16P DIP ST RS232C DR	
				JACK		
		JK901	572-034R	JACK,RCA	BJP-202-WH BAE EUN (WHITE) ST,	
		JK902	572-034R	JACK,RCA	BJP-202-WH BAE EUN (WHITE) ST,	
				LED		
		LD601	6301R1K001A	LED ASSY	LTL16KEEH74 LITEON KOREA 17	
		LD602	6301R1K001A	LED ASSY	LTL16KEEH74 LITEON KOREA 17	
				RESISTOR		
		FR101	0RF0471Q619	RESISTOR,DRAWING	4.7 OHM 1/4 W(3.4) 5.00% TR	
		R101	614-007A	RESISTOR	2.7/2W CEMENT SMPS V	
		R102	0RS1003K619	RESISTOR,FIXED METAL OXIDE FIL	100K OHM 2 W 5.00% TR	
		R103	0RD0681F608	RESISTOR,FIXED CARBON FILM	6.8 OHM 1/6 W 5.00% TA26	
		R104	0RS5602K619	RESISTOR,FIXED METAL OXIDE FIL	56K OHM 2 W 5.00% TR	
		R107	0RD1504H632	RESISTOR,FIXED CARBON FILM	1.5M OHM 1/2 W 5.00% MF10	
		R109	0RS0350K619	RESISTOR,FIXED METAL OXIDE FIL	0.35 OHM 2 W 5.00% TR	
		R114	0RD1003F608	RESISTOR,FIXED CARBON FILM	100K OHM 1/6 W 5% TA26	
		R116	0RD3300F608	RESISTOR,FIXED CARBON FILM	330 OHM 1/6 W 5% TA26	
		R117	0RD2201F608	RESISTOR,FIXED CARBON FILM	2.2K OHM 1/6 W 5% TA26	
		R118	0RD1001F608	RESISTOR,FIXED CARBON FILM	1K OHM 1/6 W 5% TA26	
		R119	0RN3301F408	RESISTOR,FIXED METAL FILM	3.3K OHM 1/6 W 1% TA26	
		R120	0RN2701F408	RESISTOR,FIXED METAL FILM	2.7K OHM 1/6 W 1% TA26	

Download from Www.Somanuals.com. All Manuals Search And Download.

S	AL	LOCA.NO.	PART NO	DESCRIPTION	SPECIFICATION	REMARK
		R121	0RD1800F608	RESISTOR,FIXED CARBON FILM	180 OHM 1/6 W 5% TA26	
		R122	0RD1003F608	RESISTOR,FIXED CARBON FILM	100K OHM 1/6 W 5% TA26	
		R152	0RD5600F608	RESISTOR,FIXED CARBON FILM	560 OHM 1/6 W 5% TA26	
		R156	0RD1001F608	RESISTOR,FIXED CARBON FILM	1K OHM 1/6 W 5% TA26	
		R157	0RD3300F608	RESISTOR,FIXED CARBON FILM	330 OHM 1/6 W 5% TA26	
		R161	0RD4701F608	RESISTOR,FIXED CARBON FILM	4.7K OHM 1/6 W 5% TA26	
		R162	0RD4701F608	RESISTOR,FIXED CARBON FILM	4.7K OHM 1/6 W 5% TA26	
		R166	0RD2201F608	RESISTOR,FIXED CARBON FILM	2.2K OHM 1/6 W 5% TA26	
		R167	0RD3901F608	RESISTOR,FIXED CARBON FILM	3.9K OHM 1/6 W 5% TA26	
		R168	0RD4701F608	RESISTOR,FIXED CARBON FILM	4.7K OHM 1/6 W 5% TA26	
		R170	0RD1001F608	RESISTOR,FIXED CARBON FILM	1K OHM 1/6 W 5% TA26	
		R171	0RD3301F608	RESISTOR,FIXED CARBON FILM	3.3K OHM 1/6 W 5% TA26	
		R172	0RD4701F608	RESISTOR,FIXED CARBON FILM	4.7K OHM 1/6 W 5% TA26	
		R173	0RD1001F608	RESISTOR,FIXED CARBON FILM	1K OHM 1/6 W 5% TA26	
		R174	0RD3300F608	RESISTOR,FIXED CARBON FILM	330 OHM 1/6 W 5% TA26	
		R175	0RD4701F608	RESISTOR,FIXED CARBON FILM	4.7K OHM 1/6 W 5% TA26	
		R177	0RD4701F608	RESISTOR,FIXED CARBON FILM	4.7K OHM 1/6 W 5% TA26	
		R302	0RD1002F608	RESISTOR,FIXED CARBON FILM	10K OHM 1/6 W 5% TA26	
		R303	0RD1802F608	RESISTOR,FIXED CARBON FILM	18K OHM 1/6 W 5% TA26	
		R304	0RD1002F608	RESISTOR,FIXED CARBON FILM	10K OHM 1/6 W 5% TA26	
		R305	0RD1001F608	RESISTOR,FIXED CARBON FILM	1K OHM 1/6 W 5% TA26	
		R306	0RD2700F608	RESISTOR,FIXED CARBON FILM	270 OHM 1/6 W 5% TA26	
		R307	0RD3300F608	RESISTOR,FIXED CARBON FILM	330 OHM 1/6 W 5% TA26	
		R308	0RD2701F608	RESISTOR,FIXED CARBON FILM	2.7K OHM 1/6 W 5% TA26	
		R309	0RD6800F608	RESISTOR,FIXED CARBON FILM	680 OHM 1/6 W 5% TA26	
		R310	0RD1001F608	RESISTOR,FIXED CARBON FILM	1K OHM 1/6 W 5% TA26	
		R311	0RD4701F608	RESISTOR,FIXED CARBON FILM	4.7K OHM 1/6 W 5% TA26	
		R312	0RD1801F608	RESISTOR,FIXED CARBON FILM	1.8K OHM 1/6 W 5% TA26	
		R313	0RD2700F608	RESISTOR,FIXED CARBON FILM	270 OHM 1/6 W 5% TA26	
		R316	0RD1500F608	RESISTOR,FIXED CARBON FILM	150 OHM 1/6 W 5% TA26	
		R317	0RD6802F608	RESISTOR,FIXED CARBON FILM	68K OHM 1/6 W 5% TA26	
		R318	0RD1001F608	RESISTOR,FIXED CARBON FILM	1K OHM 1/6 W 5% TA26	
		R319	0RD1001F608	RESISTOR,FIXED CARBON FILM	1K OHM 1/6 W 5% TA26	
		R320	0RD1501F608	RESISTOR,FIXED CARBON FILM	1.5K OHM 1/6 W 5% TA26	
		R321	0RD1801F608	RESISTOR,FIXED CARBON FILM	1.8K OHM 1/6 W 5% TA26	
		R322	0RD8201F608	RESISTOR,FIXED CARBON FILM	8.2K OHM 1/6 W 5% TA26	
		R326	0RD2701F608	RESISTOR,FIXED CARBON FILM	2.7K OHM 1/6 W 5% TA26	
		R335	0RD3902F608	RESISTOR,FIXED CARBON FILM	39K OHM 1/6 W 5% TA26	
		R338	0RD2700F608	RESISTOR,FIXED CARBON FILM	270 OHM 1/6 W 5% TA26	
		R340	0RD1802F608	RESISTOR,FIXED CARBON FILM	18K OHM 1/6 W 5% TA26	
		R341	0RD2701F608	RESISTOR,FIXED CARBON FILM	2.7K OHM 1/6 W 5% TA26	
		R349	0RD5601F608	RESISTOR,FIXED CARBON FILM	5.6K OHM 1/6 W 5% TA26	
		R380	0RD2200F608	RESISTOR,FIXED CARBON FILM	220 OHM 1/6 W 5% TA26	
		R381	0RD1001F608	RESISTOR,FIXED CARBON FILM	1K OHM 1/6 W 5% TA26	
		R384	0RD1800F608	RESISTOR,FIXED CARBON FILM	180 OHM 1/6 W 5% TA26	
		R385	0RD1800F608	RESISTOR,FIXED CARBON FILM	180 OHM 1/6 W 5% TA26	
		R386	0RD0752F608	RESISTOR,FIXED CARBON FILM	75 OHM 1/6 W 5.00% TA26	
		R387	0RD1004F608	RESISTOR,FIXED CARBON FILM	1M OHM 1/6 W 5% TA26	
		R388	0RD0752F608	RESISTOR,FIXED CARBON FILM	75 OHM 1/6 W 5.00% TA26	
		R389	0RD1502F608	RESISTOR,FIXED CARBON FILM	15K OHM 1/6 W 5% TA26	
		R390	0RD5601F608	RESISTOR,FIXED CARBON FILM	5.6K OHM 1/6 W 5% TA26	
		R391	0RD4702F608	RESISTOR,FIXED CARBON FILM	47K OHM 1/6 W 5% TA26	
		R392	0RD2201F608	RESISTOR,FIXED CARBON FILM	2.2K OHM 1/6 W 5% TA26	
		R393	0RD4702F608	RESISTOR,FIXED CARBON FILM	47K OHM 1/6 W 5% TA26	
		R3B1	0RD3901F608	RESISTOR,FIXED CARBON FILM	3.9K OHM 1/6 W 5% TA26	
		R3G1	0RD5601F608	RESISTOR,FIXED CARBON FILM	5.6K OHM 1/6 W 5% TA26	
		R3G2	0RD2702F608	RESISTOR,FIXED CARBON FILM	27K OHM 1/6 W 5% TA26	
		R3G3	0RD3902F608	RESISTOR,FIXED CARBON FILM	39K OHM 1/6 W 5% TA26	
		R3G4	0RD1503F608	RESISTOR,FIXED CARBON FILM	150K OHM 1/6 W 5% TA26	
		R3G5	0RD1800F608	RESISTOR,FIXED CARBON FILM	180 OHM 1/6 W 5% TA26	

Download from Www.Somanuals.com. All Manuals Search And Download.

S	AL	LOCA.NO.	PART NO	DESCRIPTION	SPECIFICATION	REMARK
		R3G6	0RD1800F608	RESISTOR,FIXED CARBON FILM	180 OHM 1/6 W 5% TA26	
		R402	0RD2204F608	RESISTOR,FIXED CARBON FILM	2.2M OHM 1/6 W 0.05 TA26	
		R403	0RD6801F608	RESISTOR,FIXED CARBON FILM	6.8K OHM 1/6 W 5% TA26	
		R404	0RD5600F608	RESISTOR,FIXED CARBON FILM	560 OHM 1/6 W 5% TA26	
		R406	0RD3301F608	RESISTOR,FIXED CARBON FILM	3.3K OHM 1/6 W 5% TA26	
		R408	0RD2201F608	RESISTOR,FIXED CARBON FILM	2.2K OHM 1/6 W 5% TA26	
		R409	0RD4701F608	RESISTOR,FIXED CARBON FILM	4.7K OHM 1/6 W 5% TA26	
		R410	0RD1002F608	RESISTOR,FIXED CARBON FILM	10K OHM 1/6 W 5% TA26	
		R411	0RD2202F608	RESISTOR,FIXED CARBON FILM	22K OHM 1/6 W 5% TA26	
		R412	0RD1801F608	RESISTOR,FIXED CARBON FILM	1.8K OHM 1/6 W 5% TA26	
		R413	0RD8201F608	RESISTOR,FIXED CARBON FILM	8.2K OHM 1/6 W 5% TA26	
		R414	0RD1202F608	RESISTOR,FIXED CARBON FILM	12K OHM 1/6 W 5% TA26	
		R415	0RD3303F608	RESISTOR,FIXED CARBON FILM	330K OHM 1/6 W 5% TA26	
		R416	0RD1800F608	RESISTOR,FIXED CARBON FILM	180 OHM 1/6 W 5% TA26	
		R418	0RD1802F608	RESISTOR,FIXED CARBON FILM	18K OHM 1/6 W 5% TA26	
		R419	0RD0472F608	RESISTOR,FIXED CARBON FILM	47 OHM 1/6 W 5% TA26	
		R420	0RD1001F608	RESISTOR,FIXED CARBON FILM	1K OHM 1/6 W 5% TA26	
		R421	0RD0221F608	RESISTOR,FIXED CARBON FILM	2.2 OHM 1/6 W 5% TA26	
		R424	0RD2700F608	RESISTOR,FIXED CARBON FILM	270 OHM 1/6 W 5% TA26	
		R425	0RD4702F608	RESISTOR,FIXED CARBON FILM	47K OHM 1/6 W 5% TA26	
		R430	0RD3901F608	RESISTOR,FIXED CARBON FILM	3.9K OHM 1/6 W 5% TA26	
		R431	0RD4701F608	RESISTOR,FIXED CARBON FILM	4.7K OHM 1/6 W 5% TA26	
		R482	0RD1001F608	RESISTOR,FIXED CARBON FILM	1K OHM 1/6 W 5% TA26	
		R486	0RD5600F608	RESISTOR,FIXED CARBON FILM	560 OHM 1/6 W 5% TA26	
		R488	0RD2202F608	RESISTOR,FIXED CARBON FILM	22K OHM 1/6 W 5% TA26	
		R490	0RD4702F608	RESISTOR,FIXED CARBON FILM	47K OHM 1/6 W 5% TA26	
		R491	0RD1202F608	RESISTOR,FIXED CARBON FILM	12K OHM 1/6 W 5% TA26	
		R492	0RD1501F608	RESISTOR,FIXED CARBON FILM	1.5K OHM 1/6 W 5% TA26	
		R493	0RD0102F608	RESISTOR,FIXED CARBON FILM	10 OHM 1/6 W 5% TA26	
		R501	0RD2200F608	RESISTOR,FIXED CARBON FILM	220 OHM 1/6 W 5% TA26	
		R502	0RD2200F608	RESISTOR,FIXED CARBON FILM	220 OHM 1/6 W 5% TA26	
		R504	0RD1001F608	RESISTOR,FIXED CARBON FILM	1K OHM 1/6 W 5% TA26	
		R505	0RD1001F608	RESISTOR,FIXED CARBON FILM	1K OHM 1/6 W 5% TA26	
		R507	0RD1201F608	RESISTOR,FIXED CARBON FILM	1.2K OHM 1/6 W 5% TA26	
		R508	0RD5600F608	RESISTOR,FIXED CARBON FILM	560 OHM 1/6 W 5% TA26	
		R509	0RD6800F608	RESISTOR,FIXED CARBON FILM	680 OHM 1/6 W 5% TA26	
		R510	0RD1503F608	RESISTOR,FIXED CARBON FILM	150K OHM 1/6 W 5% TA26	
		R511	0RD1001F608	RESISTOR,FIXED CARBON FILM	1K OHM 1/6 W 5% TA26	
		R512	0RD1001F608	RESISTOR,FIXED CARBON FILM	1K OHM 1/6 W 5% TA26	
		R513	0RD3901F608	RESISTOR,FIXED CARBON FILM	3.9K OHM 1/6 W 5% TA26	
		R515	0RD2700F608	RESISTOR,FIXED CARBON FILM	270 OHM 1/6 W 5% TA26	
		R516	0RD2200F608	RESISTOR,FIXED CARBON FILM	220 OHM 1/6 W 5% TA26	
		R517	0RD2200F608	RESISTOR,FIXED CARBON FILM	220 OHM 1/6 W 5% TA26	
		R6F1	0RD5600F608	RESISTOR,FIXED CARBON FILM	560 OHM 1/6 W 5% TA26	
		R6F2	0RD5600F608	RESISTOR,FIXED CARBON FILM	560 OHM 1/6 W 5% TA26	
		R521	0RD1002F608	RESISTOR,FIXED CARBON FILM	10K OHM 1/6 W 5% TA26	
		R522	0RD1001F608	RESISTOR,FIXED CARBON FILM	1K OHM 1/6 W 5% TA26	
		R525	0RD1002F608	RESISTOR,FIXED CARBON FILM	10K OHM 1/6 W 5% TA26	
		R526	0RD1002F608	RESISTOR,FIXED CARBON FILM	10K OHM 1/6 W 5% TA26	
		R527	0RD1000F608	RESISTOR,FIXED CARBON FILM	100 OHM 1/6 W 5% TA26	
		R529	0RD1002F608	RESISTOR,FIXED CARBON FILM	10K OHM 1/6 W 5% TA26	
		R532	0RD6802F608	RESISTOR,FIXED CARBON FILM	68K OHM 1/6 W 5% TA26	
		R534	0RD2201F608	RESISTOR,FIXED CARBON FILM	2.2K OHM 1/6 W 5% TA26	
		R541	0RD2201F608	RESISTOR,FIXED CARBON FILM	2.2K OHM 1/6 W 5% TA26	
		R543	0RD2701F608	RESISTOR,FIXED CARBON FILM	2.7K OHM 1/6 W 5% TA26	
		R544	0RD4701F608	RESISTOR,FIXED CARBON FILM	4.7K OHM 1/6 W 5% TA26	
		R546	0RD4701F608	RESISTOR,FIXED CARBON FILM	4.7K OHM 1/6 W 5% TA26	
		R547	0RD1002F608	RESISTOR,FIXED CARBON FILM	10K OHM 1/6 W 5% TA26	
		R548	0RD1003F608	RESISTOR,FIXED CARBON FILM	100K OHM 1/6 W 5% TA26	
		R550	0RD2200F608	RESISTOR,FIXED CARBON FILM	220 OHM 1/6 W 5% TA26	

Download from Www.Somanuals.com. All Manuals Search And Download.

S	AL	LOCA.NO.	PART NO	DESCRIPTION	SPECIFICATION	REMARK
		R553	0RD2200F608	RESISTOR,FIXED CARBON FILM	220 OHM 1/6 W 5% TA26	
		R554	0RD4700F608	RESISTOR,FIXED CARBON FILM	470 OHM 1/6 W 5% TA26	
		R555	0RD2200F608	RESISTOR,FIXED CARBON FILM	220 OHM 1/6 W 5% TA26	
		R556	0RD2202F608	RESISTOR,FIXED CARBON FILM	22K OHM 1/6 W 5% TA26	
		R557	0RD2702F608	RESISTOR,FIXED CARBON FILM	27K OHM 1/6 W 5% TA26	
		R558	0RD2202F608	RESISTOR,FIXED CARBON FILM	22K OHM 1/6 W 5% TA26	
		R559	0RD4701F608	RESISTOR,FIXED CARBON FILM	4.7K OHM 1/6 W 5% TA26	
		R560	0RD4701F608	RESISTOR,FIXED CARBON FILM	4.7K OHM 1/6 W 5% TA26	
		R563	0RD4701F608	RESISTOR,FIXED CARBON FILM	4.7K OHM 1/6 W 5% TA26	
		R564	0RD2702F608	RESISTOR,FIXED CARBON FILM	27K OHM 1/6 W 5% TA26	
		R567	0RD4701F608	RESISTOR,FIXED CARBON FILM	4.7K OHM 1/6 W 5% TA26	
		R569	0RD4701F608	RESISTOR,FIXED CARBON FILM	4.7K OHM 1/6 W 5% TA26	
		R570	0RD4701F608	RESISTOR,FIXED CARBON FILM	4.7K OHM 1/6 W 5% TA26	
		R571	0RD2202F608	RESISTOR,FIXED CARBON FILM	22K OHM 1/6 W 5% TA26	
		R572	0RD1001F608	RESISTOR,FIXED CARBON FILM	1K OHM 1/6 W 5% TA26	
		R573	0RD8200F608	RESISTOR,FIXED CARBON FILM	820 OHM 1/6 W 5% TA26	
		R574	0RD4701F608	RESISTOR,FIXED CARBON FILM	4.7K OHM 1/6 W 5% TA26	
		R575	0RD4701F608	RESISTOR,FIXED CARBON FILM	4.7K OHM 1/6 W 5% TA26	
		R576	0RD4701F608	RESISTOR,FIXED CARBON FILM	4.7K OHM 1/6 W 5% TA26	
		R577	0RD4701F608	RESISTOR,FIXED CARBON FILM	4.7K OHM 1/6 W 5% TA26	
		R578	0RD4701F608	RESISTOR,FIXED CARBON FILM	4.7K OHM 1/6 W 5% TA26	
		R579	0RD5602F608	RESISTOR,FIXED CARBON FILM	56K OHM 1/6 W 5% TA26	
		R580	0RD5600F608	RESISTOR,FIXED CARBON FILM	560 OHM 1/6 W 5% TA26	
		R581	0RD5600F608	RESISTOR,FIXED CARBON FILM	560 OHM 1/6 W 5% TA26	
		R582	0RD1001F608	RESISTOR,FIXED CARBON FILM	1K OHM 1/6 W 5% TA26	
		R583	0RD1002F608	RESISTOR,FIXED CARBON FILM	10K OHM 1/6 W 5% TA26	
		R585	0RD1001F608	RESISTOR,FIXED CARBON FILM	1K OHM 1/6 W 5% TA26	
		R589	0RD2700F608	RESISTOR,FIXED CARBON FILM	270 OHM 1/6 W 5% TA26	
		R590	0RD1001F608	RESISTOR,FIXED CARBON FILM	1K OHM 1/6 W 5% TA26	
		R591	0RD4701F608	RESISTOR,FIXED CARBON FILM	4.7K OHM 1/6 W 5% TA26	
		R592	0RD4702F608	RESISTOR,FIXED CARBON FILM	47K OHM 1/6 W 5% TA26	
		R593	0RD1202F608	RESISTOR,FIXED CARBON FILM	12K OHM 1/6 W 5% TA26	
		R595	0RD1000F608	RESISTOR,FIXED CARBON FILM	100 OHM 1/6 W 5% TA26	
		R596	0RD1000F608	RESISTOR,FIXED CARBON FILM	100 OHM 1/6 W 5% TA26	
		R597	0RD1000F608	RESISTOR,FIXED CARBON FILM	100 OHM 1/6 W 5% TA26	
		R598	0RD1000F608	RESISTOR,FIXED CARBON FILM	100 OHM 1/6 W 5% TA26	
		R5B1	0RD1001F608	RESISTOR,FIXED CARBON FILM	1K OHM 1/6 W 5% TA26	
		R5B3	0RD1001F608	RESISTOR,FIXED CARBON FILM	1K OHM 1/6 W 5% TA26	
		R5B4	0RD1001F608	RESISTOR,FIXED CARBON FILM	1K OHM 1/6 W 5% TA26	
		R5C5	0RD1001F608	RESISTOR,FIXED CARBON FILM	1K OHM 1/6 W 5% TA26	
		R5C6	0RD1001F608	RESISTOR,FIXED CARBON FILM	1K OHM 1/6 W 5% TA26	
		R5C7	0RD1001F608	RESISTOR,FIXED CARBON FILM	1K OHM 1/6 W 5% TA26	
		R5F0	0RD0122F608	RESISTOR,FIXED CARBON FILM	12 OHM 1/6 W 5.00% TA26	
		R5F1	0RD0122F608	RESISTOR,FIXED CARBON FILM	12 OHM 1/6 W 5.00% TA26	
		R5F2	0RD0102F608	RESISTOR,FIXED CARBON FILM	10 OHM 1/6 W 5% TA26	
		R5F3	0RD0102F608	RESISTOR,FIXED CARBON FILM	10 OHM 1/6 W 5% TA26	
		R6F4	0RD1001F608	RESISTOR,FIXED CARBON FILM	1K OHM 1/6 W 5% TA26	
		R6F5	0RD1001F608	RESISTOR,FIXED CARBON FILM	1K OHM 1/6 W 5% TA26	
		R6F6	0RD1001F608	RESISTOR,FIXED CARBON FILM	1K OHM 1/6 W 5% TA26	
		R6F7	0RD5602F608	RESISTOR,FIXED CARBON FILM	56K OHM 1/6 W 5% TA26	
		R5K0	0RD1002F608	RESISTOR,FIXED CARBON FILM	10K OHM 1/6 W 5% TA26	
		R5K1	0RD1002F608	RESISTOR,FIXED CARBON FILM	10K OHM 1/6 W 5% TA26	
		R5K2	0RD1002F608	RESISTOR,FIXED CARBON FILM	10K OHM 1/6 W 5% TA26	
		R6R1	0RD3300F608	RESISTOR,FIXED CARBON FILM	330 OHM 1/6 W 5% TA26	
		R603	0RD1801F608	RESISTOR,FIXED CARBON FILM	1.8K OHM 1/6 W 5% TA26	
		R604	0RD1801F608	RESISTOR,FIXED CARBON FILM	1.8K OHM 1/6 W 5% TA26	
		R605	0RD1501F608	RESISTOR,FIXED CARBON FILM	1.5K OHM 1/6 W 5% TA26	
		R606	0RD1501F608	RESISTOR,FIXED CARBON FILM	1.5K OHM 1/6 W 5% TA26	
		R607	0RD2201F608	RESISTOR,FIXED CARBON FILM	2.2K OHM 1/6 W 5% TA26	
		R608	0RD2201F608	RESISTOR,FIXED CARBON FILM	2.2K OHM 1/6 W 5% TA26	
		R609	0RD2701F608	RESISTOR,FIXED CARBON FILM	2.7K OHM 1/6 W 5% TA26	

Download from Www.Somanuals.com. All Manuals Search And Download.

S	AL	LOCA.NO.	PART NO	DESCRIPTION	SPECIFICATION	REMARK
		R610	0RD2701F608	RESISTOR,FIXED CARBON FILM	2.7K OHM 1/6 W 5% TA26	
		R611	0RD3901F608	RESISTOR,FIXED CARBON FILM	3.9K OHM 1/6 W 5% TA26	
		R612	0RD3901F608	RESISTOR,FIXED CARBON FILM	3.9K OHM 1/6 W 5% TA26	
		R613	0RD6801F608	RESISTOR,FIXED CARBON FILM	6.8K OHM 1/6 W 5% TA26	
		R614	0RD6801F608	RESISTOR,FIXED CARBON FILM	6.8K OHM 1/6 W 5% TA26	
		R615	0RD1202F608	RESISTOR,FIXED CARBON FILM	12K OHM 1/6 W 5% TA26	
		R616	0RD1202F608	RESISTOR,FIXED CARBON FILM	12K OHM 1/6 W 5% TA26	
		R617	0RD6802F608	RESISTOR,FIXED CARBON FILM	68K OHM 1/6 W 5% TA26	
		R618	0RD1002F608	RESISTOR,FIXED CARBON FILM	10K OHM 1/6 W 5% TA26	
		R621	0RD1801F608	RESISTOR,FIXED CARBON FILM	1.8K OHM 1/6 W 5% TA26	
		R622	0RD1501F608	RESISTOR,FIXED CARBON FILM	1.5K OHM 1/6 W 5% TA26	
		R623	0RD2201F608	RESISTOR,FIXED CARBON FILM	2.2K OHM 1/6 W 5% TA26	
		R624	0RD2701F608	RESISTOR,FIXED CARBON FILM	2.7K OHM 1/6 W 5% TA26	
		R625	0RD6802F608	RESISTOR,FIXED CARBON FILM	68K OHM 1/6 W 5% TA26	
		R626	0RD6802F608	RESISTOR,FIXED CARBON FILM	68K OHM 1/6 W 5% TA26	
		R627	0RD6802F608	RESISTOR,FIXED CARBON FILM	68K OHM 1/6 W 5% TA26	
		R628	0RD6802F608	RESISTOR,FIXED CARBON FILM	68K OHM 1/6 W 5% TA26	
		R629	0RD6802F608	RESISTOR,FIXED CARBON FILM	68K OHM 1/6 W 5% TA26	
		R630	0RD6802F608	RESISTOR,FIXED CARBON FILM	68K OHM 1/6 W 5% TA26	
		R634	0RD0101F608	RESISTOR,FIXED CARBON FILM	1 OHM 1/6 W 5.00% TA26	
		R635	0RD0101F608	RESISTOR,FIXED CARBON FILM	1 OHM 1/6 W 5.00% TA26	
		R636	0RD0101F608	RESISTOR,FIXED CARBON FILM	1 OHM 1/6 W 5.00% TA26	
		R637	0RD0101F608	RESISTOR,FIXED CARBON FILM	1 OHM 1/6 W 5.00% TA26	
		R638	0RD0101F608	RESISTOR,FIXED CARBON FILM	1 OHM 1/6 W 5.00% TA26	
		R904	0RD1001F608	RESISTOR,FIXED CARBON FILM	1K OHM 1/6 W 5% TA26	
		R905	0RD1001F608	RESISTOR,FIXED CARBON FILM	1K OHM 1/6 W 5% TA26	
		R906	0RD1001F608	RESISTOR,FIXED CARBON FILM	1K OHM 1/6 W 5% TA26	
		R907	0RD1001F608	RESISTOR,FIXED CARBON FILM	1K OHM 1/6 W 5% TA26	
		R908	0RD1001F608	RESISTOR,FIXED CARBON FILM	1K OHM 1/6 W 5% TA26	
		R909	0RD1001F608	RESISTOR,FIXED CARBON FILM	1K OHM 1/6 W 5% TA26	
		R910	0RD1001F608	RESISTOR,FIXED CARBON FILM	1K OHM 1/6 W 5% TA26	
		R911	0RD1001F608	RESISTOR,FIXED CARBON FILM	1K OHM 1/6 W 5% TA26	
		R912	0RD1001F608	RESISTOR,FIXED CARBON FILM	1K OHM 1/6 W 5% TA26	
		R914	0RD1001F608	RESISTOR,FIXED CARBON FILM	1K OHM 1/6 W 5% TA26	
		R915	0RD1001F608	RESISTOR,FIXED CARBON FILM	1K OHM 1/6 W 5% TA26	
		R916	0RD1002F608	RESISTOR,FIXED CARBON FILM	10K OHM 1/6 W 5% TA26	
		R917	0RD1002F608	RESISTOR,FIXED CARBON FILM	10K OHM 1/6 W 5% TA26	
		R918	0RD1002F608	RESISTOR,FIXED CARBON FILM	10K OHM 1/6 W 5% TA26	
		R919	0RD1002F608	RESISTOR,FIXED CARBON FILM	10K OHM 1/6 W 5% TA26	
		R920	0RD1002F608	RESISTOR,FIXED CARBON FILM	10K OHM 1/6 W 5% TA26	
		R921	0RD1002F608	RESISTOR,FIXED CARBON FILM	10K OHM 1/6 W 5% TA26	
		R922	0RD1002F608	RESISTOR,FIXED CARBON FILM	10K OHM 1/6 W 5% TA26	
		R923	0RD1002F608	RESISTOR,FIXED CARBON FILM	10K OHM 1/6 W 5% TA26	
		R924	0RD1002F608	RESISTOR,FIXED CARBON FILM	10K OHM 1/6 W 5% TA26	
		R925	0RD1002F608	RESISTOR,FIXED CARBON FILM	10K OHM 1/6 W 5% TA26	
		R926	0RD1002F608	RESISTOR,FIXED CARBON FILM	10K OHM 1/6 W 5% TA26	
		R927	0RD1002F608	RESISTOR,FIXED CARBON FILM	10K OHM 1/6 W 5% TA26	
		R928	0RD1002F608	RESISTOR,FIXED CARBON FILM	10K OHM 1/6 W 5% TA26	
		R929	0RD1002F608	RESISTOR,FIXED CARBON FILM	10K OHM 1/6 W 5% TA26	
		R930	0RD1001F608	RESISTOR,FIXED CARBON FILM	1K OHM 1/6 W 5% TA26	
		R931	0RD5600F608	RESISTOR,FIXED CARBON FILM	560 OHM 1/6 W 5% TA26	
		R932	0RD1002F608	RESISTOR,FIXED CARBON FILM	10K OHM 1/6 W 5% TA26	
		R933	0RD1001F608	RESISTOR,FIXED CARBON FILM	1K OHM 1/6 W 5% TA26	
		R934	0RD2201F608	RESISTOR,FIXED CARBON FILM	2.2K OHM 1/6 W 5% TA26	
		R935	0RD1001F608	RESISTOR,FIXED CARBON FILM	1K OHM 1/6 W 5% TA26	
		R936	0RD1002F608	RESISTOR,FIXED CARBON FILM	10K OHM 1/6 W 5% TA26	
		R937	0RD2702F608	RESISTOR,FIXED CARBON FILM	27K OHM 1/6 W 5% TA26	
		R938	0RD8201F608	RESISTOR,FIXED CARBON FILM	8.2K OHM 1/6 W 5% TA26	
		R939	0RD2200F608	RESISTOR,FIXED CARBON FILM	220 OHM 1/6 W 5% TA26	
		R940	0RD0562F608	RESISTOR,FIXED CARBON FILM	56 OHM 1/6 W 5% TA26	

Download from Www.Somanuals.com. All Manuals Search And Download.

S	AL	LOCA.NO.	PART NO	DESCRIPTION	SPECIFICATION	REMARK
		VR501	613-032W	RESISTOR,DRAWING	RH063MCJ5R (220K)	
		VR601	611-024B	RESISTOR,DRAWING	RK09K113000123B	
				REMOTE CONTROLLER RECEIVER		
		RC6R1	6712R2938GA	REMOTE CONTROLLER RECEIVER	TSOP1238SP1 VISHAY(TEMIC) 37-9	
				SENSOR		
⚠		IC102	657-063A	SENSOR	LTV-817B,PHOTO COUPLER(LITEON)	
		RS501	6500RAB003A	SENSOR	SG-260 KODENSHI D33 REEL SENSO	
		RS502	6500RAB003A	SENSOR	SG-260 KODENSHI D33 REEL SENSO	
				SWITCH		
		CS501	6600M000026	SWITCH,PUSH	MPU12970MLB0 VCR CST IN S/W MI	
		JS601	556-272A	SWITCH	JRS0000-0502 SMK NON 1V 10MA V	
		MS501	6600JB8005B	SWITCH,MODE	NON 5V 1MA VERTICAL -G	
		SL601	6600Q000007	SWITCH,SLIDE	CSS-2201A CHANG SHIN 30V DC 0.	
		SW601	556-219B	SWITCH,TACT	THVV502GAA POSTECH DC 12 V 5-	
		SW602	556-219B	SWITCH,TACT	THVV502GAA POSTECH DC 12 V 5-	
		SW603	556-219B	SWITCH,TACT	THVV502GAA POSTECH DC 12 V 5-	
		SW604	556-219B	SWITCH,TACT	THVV502GAA POSTECH DC 12 V 5-	
		SW605	556-219B	SWITCH,TACT	THVV502GAA POSTECH DC 12 V 5-	
		SW606	556-219B	SWITCH,TACT	THVV502GAA POSTECH DC 12 V 5-	
		SW607	556-219B	SWITCH,TACT	THVV502GAA POSTECH DC 12 V 5-	
		SW608	556-219B	SWITCH,TACT	THVV502GAA POSTECH DC 12 V 5-	
		SW609	556-219B	SWITCH,TACT	THVV502GAA POSTECH DC 12 V 5-	
		SW610	556-219B	SWITCH,TACT	THVV502GAA POSTECH DC 12 V 5-	
		SW611	556-219B	SWITCH,TACT	THVV502GAA POSTECH DC 12 V 5-	
		SW612	556-219B	SWITCH,TACT	THVV502GAA POSTECH DC 12 V 5-	
		SW613	556-219B	SWITCH,TACT	THVV502GAA POSTECH DC 12 V 5-	
		SW614	556-219B	SWITCH,TACT	THVV502GAA POSTECH DC 12 V 5-	
		SW615	556-219B	SWITCH,TACT	THVV502GAA POSTECH DC 12 V 5-	
		SW616	556-219B	SWITCH,TACT	THVV502GAA POSTECH DC 12 V 5-	
		SW617	556-219B	SWITCH,TACT	THVV502GAA POSTECH DC 12 V 5-	
		SW618	556-219B	SWITCH,TACT	THVV502GAA POSTECH DC 12 V 5-	
		SW619	556-219B	SWITCH,TACT	THVV502GAA POSTECH DC 12 V 5-	
		SW620	556-219B	SWITCH,TACT	THVV502GAA POSTECH DC 12 V 5-	
		SW621	556-219B	SWITCH,TACT	THVV502GAA POSTECH DC 12 V 5-	
		SW901	556-219B	SWITCH,TACT	THVV502GAA POSTECH DC 12 V 5-	
				TRANSISTOR		
		Q152	0TR320309AA	TRANSISTOR,BIPOLARS	KTC3203 KEC TP TO92 50V 150MA	
		Q153	0TR127309AA	TRANSISTOR	KTA1273-TP-Y (KTA966A)KEC	
		Q155	0TR127309AA	TRANSISTOR	KTA1273-TP-Y (KTA966A)KEC	
		Q156	0TR120309AE	TRANSISTOR	SRC1203 TP AUK TO92 22K,22K	
		Q157	0TR120309AE	TRANSISTOR	SRC1203 TP AUK TO92 22K,22K	
		Q159	0TR127309AA	TRANSISTOR	KTA1273-TP-Y (KTA966A)KEC	
		Q161	0TR319809AC	TRANSISTOR	KTC3198-TP-BL (KTC1815)KEC	
		Q162	0TR120309AE	TRANSISTOR	SRC1203 TP AUK TO92 22K,22K	
		Q163	0TR127309AA	TRANSISTOR	KTA1273-TP-Y (KTA966A)KEC	
		Q164	0TR120309AE	TRANSISTOR	SRC1203 TP AUK TO92 22K,22K	
		Q301	0TR319809AC	TRANSISTOR	KTC3198-TP-BL (KTC1815)KEC	
		Q302	0TR319809AC	TRANSISTOR	KTC3198-TP-BL (KTC1815)KEC	
		Q303	0TR126609AE	TRANSISTOR	KTA1266-GR,TP(KTA1015),KEC	
		Q304	0TR319809AC	TRANSISTOR	KTC3198-TP-BL (KTC1815)KEC	
		Q305	0TR319809AC	TRANSISTOR	KTC3198-TP-BL (KTC1815)KEC	
		Q380	0TR126609AE	TRANSISTOR	KTA1266-GR,TP(KTA1015),KEC	
		Q381	0TR319809AC	TRANSISTOR	KTC3198-TP-BL (KTC1815)KEC	
		Q382	0TR126609AE	TRANSISTOR	KTA1266-GR,TP(KTA1015),KEC	
		Q3G1	0TR126609AE	TRANSISTOR	KTA1266-GR,TP(KTA1015),KEC	
		Q402	0TR126609AE	TRANSISTOR	KTA1266-GR,TP(KTA1015),KEC	
		Q403	0TR319809AC	TRANSISTOR	KTC3198-TP-BL (KTC1815)KEC	
		Q404	0TR319809AC	TRANSISTOR	KTC3198-TP-BL (KTC1815)KEC	
		Q405	0TR320309AA	TRANSISTOR,BIPOLARS	KTC3203 KEC TP TO92 50V 150MA	
		Q406	0TR319809AC	TRANSISTOR	KTC3198-TP-BL (KTC1815)KEC	
		Q481	0TR126609AE	TRANSISTOR	KTA1266-GR,TP(KTA1015),KEC	

Download from Www.Somanuals.com. All Manuals Search And Download.

S	AL	LOCA.NO.	PART NO	DESCRIPTION	SPECIFICATION	REMARK
		Q501	0TR319809AC	TRANSISTOR	KTC3198-TP-BL (KTC1815)KEC	
		Q502	0TR319809AA	TRANSISTOR,BIPOLARS	KTC3198(KTC1815) KEC TP TO92 5	
		Q503	0TR127309AA	TRANSISTOR	KTA1273-TP-Y (KTA966A)KEC	
		Q504	0TR126609AE	TRANSISTOR	KTA1266-GR,TP(KTA1015),KEC	
		Q506	0TR126609AE	TRANSISTOR	KTA1266-GR,TP(KTA1015),KEC	
		Q512	0TR120309AE	TRANSISTOR	SRC1203 TP AUK TO92 22K,22K	
		Q513	0TR103009AF	TRANSISTOR,BIPOLARS	KRA103M(KRA2203) KEC TP TO92M	
		Q514	0TR120309AE	TRANSISTOR	SRC1203 TP AUK TO92 22K,22K	
		Q515	0TR120309AE	TRANSISTOR	SRC1203 TP AUK TO92 22K,22K	
		Q521	0TR320309AA	TRANSISTOR,BIPOLARS	KTC3203 KEC TP TO92 50V 150MA	
		Q901	0TR120309AE	TRANSISTOR	SRC1203 TP AUK TO92 22K,22K	
		Q902	0TR120309AE	TRANSISTOR	SRC1203 TP AUK TO92 22K,22K	
		Q903	0TR120309AE	TRANSISTOR	SRC1203 TP AUK TO92 22K,22K	
		Q904	0TR120309AE	TRANSISTOR	SRC1203 TP AUK TO92 22K,22K	
		Q905	0TR120309AE	TRANSISTOR	SRC1203 TP AUK TO92 22K,22K	
		Q906	0TR120309AE	TRANSISTOR	SRC1203 TP AUK TO92 22K,22K	
		Q907	0TR120309AE	TRANSISTOR	SRC1203 TP AUK TO92 22K,22K	
		Q908	0TR120309AE	TRANSISTOR	SRC1203 TP AUK TO92 22K,22K	
		Q909	0TR120309AE	TRANSISTOR	SRC1203 TP AUK TO92 22K,22K	
		Q910	0TR120309AE	TRANSISTOR	SRC1203 TP AUK TO92 22K,22K	
		Q911	0TR320309AA	TRANSISTOR,BIPOLARS	KTC3203 KEC TP TO92 50V 150MA	
		Q912	0TR534309BA	TRANSISTOR,BIPOLARS	2SC5343-L TP AUK TO92 -	
		Q913	0TR198009CA	TRANSISTOR	2SA1980G TP AUK TO92	
		Q914	0TR198009CA	TRANSISTOR	2SA1980G TP AUK TO92	
				TRANSFORMER		
		T101	642-023U	TRANSFORMER,SMPS[COIL]	SJE-023U SJ/CS WIDE EER2828	
				VARISTOR		
		V101	656-004C	VARISTOR,DRAWING	SVC681D-10A SAMHWA 4.O CUT	
				X-TAL		
		X302	6202R2357AE	RESONATOR,CRYSTAL	HC49U SSANG TAE 3-579575MHZ 1	
		X501	6202R-DA01A	RESONATOR,CRYSTAL	CFS-308 CITIZEN 32-768KHZ 20	
		X502	6202R1143DC	RESONATOR,CRYSTAL	H49U BUBANG 14-31818HZ 25PPM 1	
				ZENER DIODE		
		ZD101	0DZ332609FA	DIODE,ZENER	UZ-3.3BSB 26MM TP PYUNG CHANG	
		ZD152	0DZ910009BB	DIODE,ZENER	MTZJ9.1C TP ROHM-K DO34 0.5W 8	
		ZD502	0DZ622609AB	DIODE,ZENER	UZ-6.2BSA 26MM TP PYUNG CHANG	
		ZD503	0DZ622609AB	DIODE,ZENER	UZ-6.2BSA 26MM TP PYUNG CHANG	
		ZD901	0DZ132609BB	DIODE,ZENER	UZ-13BSA 26MM TP PYUNG CHANG	
		ZD902	0DZ132609BB	DIODE,ZENER	UZ-13BSA 26MM TP PYUNG CHANG	
		ZD903	0DZ132609BB	DIODE,ZENER	UZ-13BSA 26MM TP PYUNG CHANG	
		ZD904	0DZ132609BB	DIODE,ZENER	UZ-13BSA 26MM TP PYUNG CHANG	
		ZD905	0DZ132609BB	DIODE,ZENER	UZ-13BSA 26MM TP PYUNG CHANG	
		ZD906	0DZ132609BB	DIODE,ZENER	UZ-13BSA 26MM TP PYUNG CHANG	
		ZD907	0DZ132609BB	DIODE,ZENER	UZ-13BSA 26MM TP PYUNG CHANG	
		ZD908	0DZ132609BB	DIODE,ZENER	UZ-13BSA 26MM TP PYUNG CHANG	
		ZD909	0DZ132609BB	DIODE,ZENER	UZ-13BSA 26MM TP PYUNG CHANG	
		ZD910	0DZ132609BB	DIODE,ZENER	UZ-13BSA 26MM TP PYUNG CHANG	
		ZD911	0DZ132609BB	DIODE,ZENER	UZ-13BSA 26MM TP PYUNG CHANG	
		ZD912	0DZ132609BB	DIODE,ZENER	UZ-13BSA 26MM TP PYUNG CHANG	
		ZD913	0DZ132609BB	DIODE,ZENER	UZ-13BSA 26MM TP PYUNG CHANG	
		ZD914	0DZ132609BB	DIODE,ZENER	UZ-13BSA 26MM TP PYUNG CHANG	
		ZD915	0DZ132609BB	DIODE,ZENER	UZ-13BSA 26MM TP PYUNG CHANG	
		ZD916	0DZ132609BB	DIODE,ZENER	UZ-13BSA 26MM TP PYUNG CHANG	
		ZD917	0DZ132609BB	DIODE,ZENER	UZ-13BSA 26MM TP PYUNG CHANG	
		ZD920	0DZ910009BB	DIODE,ZENER	MTZJ9.1C TP ROHM-K DO34 0.5W 8	

Download from Www.Somanuals.com. All Manuals Search And Download.

Free Manuals Download Website

http://myh66.com

http://usermanuals.us

http://www.somanuals.com

http://www.4manuals.cc

http://www.manual-lib.com

http://www.404manual.com

http://www.luxmanual.com

http://aubethermostatmanual.com

Golf course search by state

http://golfingnear.com

Email search by domain

http://emailbydomain.com

Auto manuals search

http://auto.somanuals.com

TV manuals search

http://tv.somanuals.com