makita 1/2" CORDLESS IMPACT WRENCH Model 6911HDWA

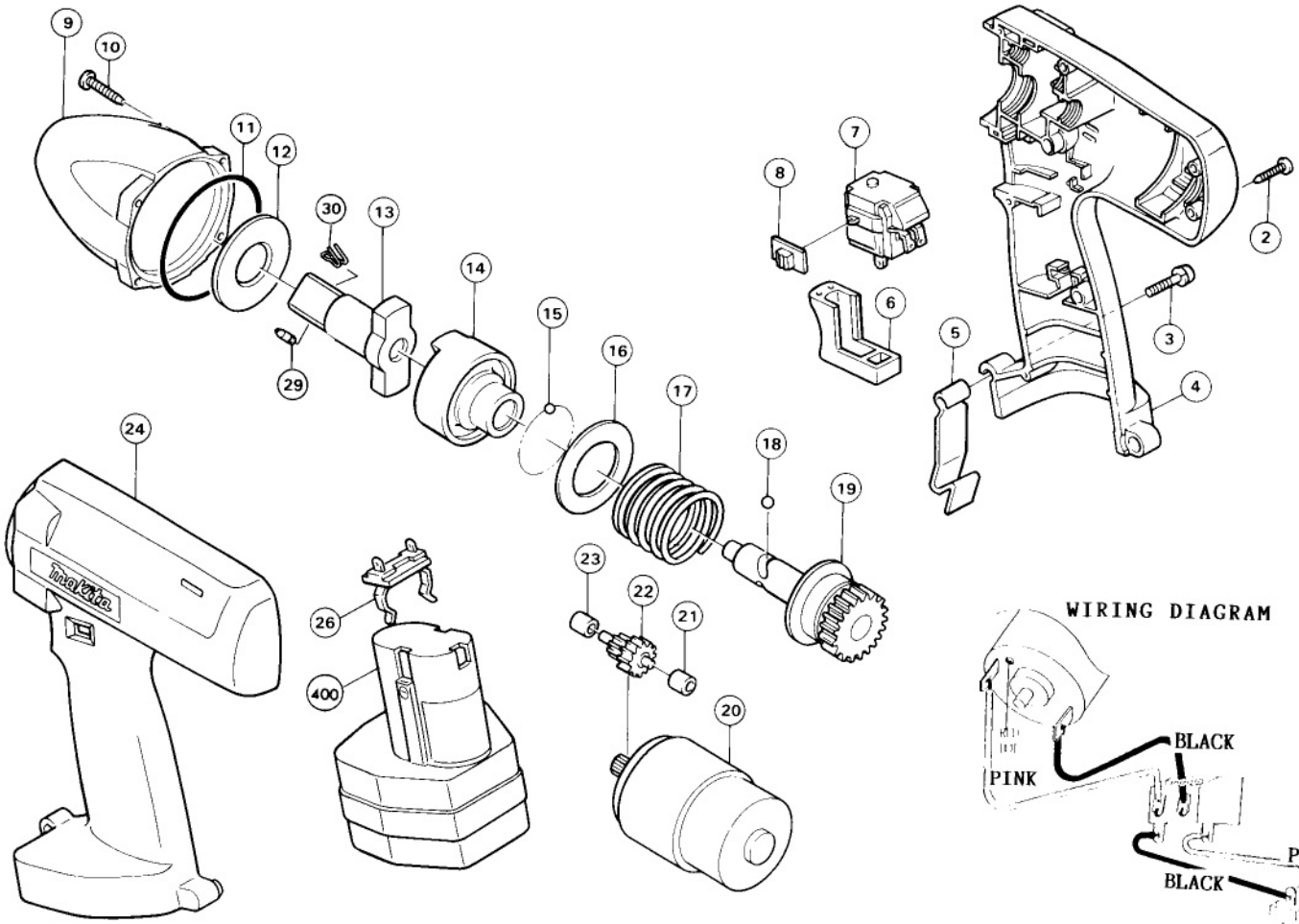

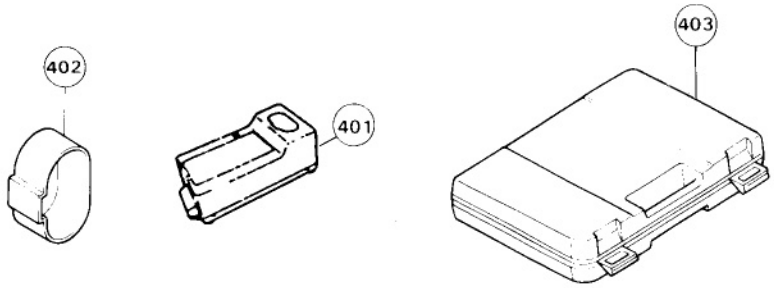

IMPORTANT! – To assure product SAFETY and RELIABILITY, repairs should be performed by MAKITA Service Centers or other qualified service organizations. Always use MAKITA replacement parts.

Fig.	Part No.	Qty. Used	Description
2	265925-7	6	T. SCREW BT4x20
3	911138-5	1	P.H. SCREW M4x20
4	182532-0	1	HOUSING SET (Incl. Fig. 24)
5	343579-1	1	SET PLATE
6	414708-4	1	SWITCH LEVER
7	651967-1	1	SWITCH
8	414740-8	1	LEVER
9	152411-6	1	HAMMER CASE cpl.
10	265925-7	4	T. SCREW BT4x20
11	213604-1	1	O RING 50
12	267054-2	1	FLAT WASHER 18
13	322593-0	1	ANVIL
14	322527-3	1	HAMMER
15	216001-0	29	STEEL BALL 3.5
16	267088-5	1	FLAT WASHER 28
17	233045-5	1	COMPRESSION SPRING 30
18	216011-7	2	STEEL BALL 5.6
19	153216-7	1	SPINDLE cpl.
20	629638-8	1	DC MOTOR 12V (Incl. 226404-0 Helical Gear 15)
21	214027-6	1	PLANE BEARING 4
22	226115-7	1	GEAR cpl. 10-38
23	214027-6	1	PLANE BEARING 4
24	182532-0	1	HOUSING SET (Incl. Fig. 4)
26	643918-8	1	BATTERY HOLDER
29	323675-1	1	PIN 4
30	322045-1	1	CLIP
ACCESSORIES			
400	192598-2	1	HIGH CAPACITY BATTERY 1222
401	DC1411	1	FAST CHARGER
402	414938-7	1	BATTERY COVER
403	824549-4	1	PLASTIC TOOL CASE

02-99

Download from Www.Somanuals.com. All Manuals Search And Download.

Free Manuals Download Website

http://myh66.com

http://usermanuals.us

http://www.somanuals.com

http://www.4manuals.cc

http://www.manual-lib.com

http://www.404manual.com

http://www.luxmanual.com

http://aubethermostatmanual.com

Golf course search by state

http://golfingnear.com

Email search by domain

http://emailbydomain.com

Auto manuals search

http://auto.somanuals.com

TV manuals search

http://tv.somanuals.com