WIRING INSTRUCTIONS

TITLE **ORBITAL SANDERS**

BULLETIN **58-01-0470**

MILWAUKEE ELECTRIC TOOL CORP. 13135 WEST LISBON RD. BROOKFIELD, WIS

Date Nov.'69

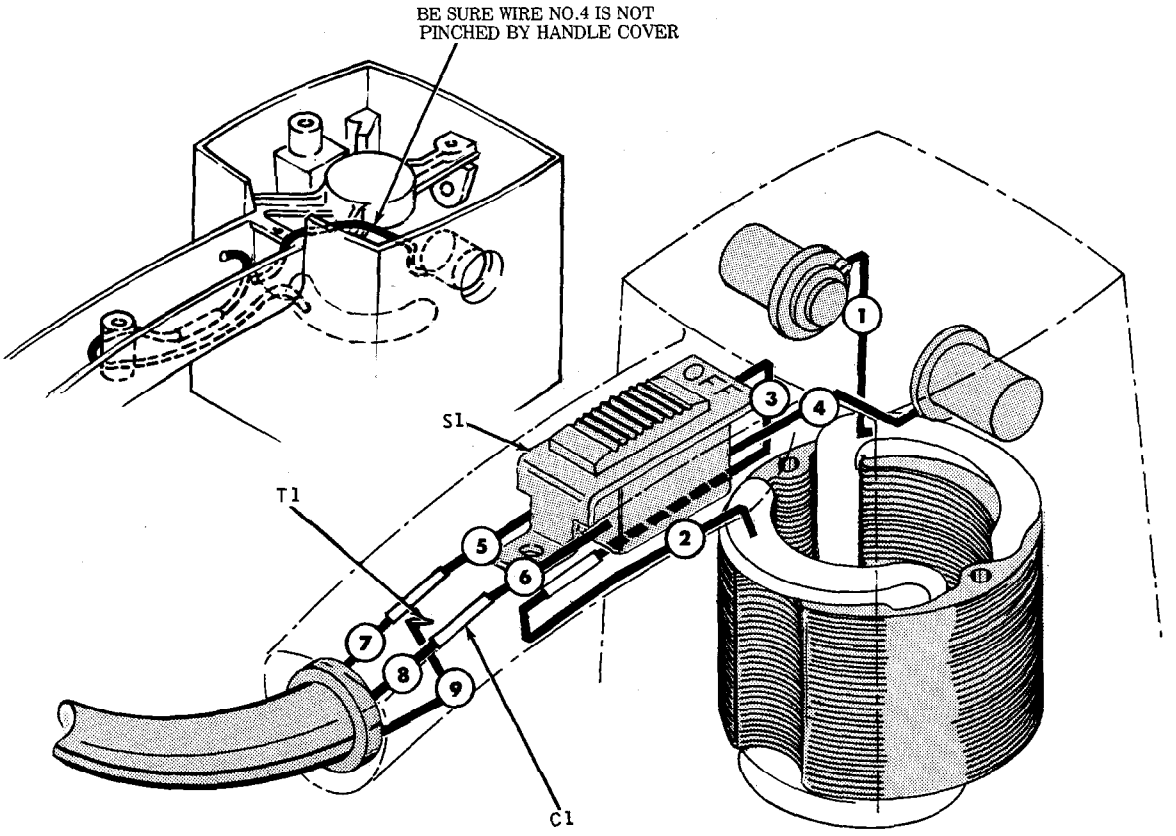

NOTE:
ALL LEADS MUST BE HELD TO ± 1/8"
ALL FIELD LEADS TO BE MEASURED FROM AND PERPENDICULAR TO LAMINATIONS.
ALL LEAD LENGTHS ARE BEFORE STRIPPING.

WHERE TERMINAL AND CONNECTOR COMBINATIONS ARE SPECIFIED, SEE ELECTRICAL PARTS CHART FOR PART NO. AND QUANTITY AND DRAWING FOR ACTUAL HOOK-UP

WIRING SPECIFICATIONS

Wire Color	Wire No.	Ga.	Lgth. in.	Terminal T1	Terminal T2	Terminal T3	Terminal T4	Connector C1	Connector C2	Connector C3	Connector C4	Wire Color	Wire No.	Ga.	Lgth. in.	Terminal T1	Terminal T2	Terminal T3	Terminal T4	Connector C1	Connector C2	Connector C3	Connector C4
Red	1	Fld.	2-3/4									Black	7	Cord	2					X			
Brown	2	Fld.	5					X				White	8	Cord	2					X			
												Green	9	Cord	2	X							
Black	3	Swit.	2-5/8																				
Black	4	Swit.	2-5/8																				
Black	5	Swit.	1-3/4																				
Black	6	Swit.	1-3/4																				

Electrical Parts

TERMINAL DESCRIPTION

Code	Part No.	Qnty.
T1	23-74-0050	1

CONNECTOR DESCRIPTION

Code	Part No.	Qnty.
C1	23-74-0080	3

SWITCH DESCRIPTION

Code	Part No.	Qnty.
S1	23-66-0380	1

Form OE-24

Download from Www.Somanuals.com. All Manuals Search And Download.

Free Manuals Download Website

http://myh66.com

http://usermanuals.us

http://www.somanuals.com

http://www.4manuals.cc

http://www.manual-lib.com

http://www.404manual.com

http://www.luxmanual.com

http://aubethermostatmanual.com

Golf course search by state

http://golfingnear.com

Email search by domain

http://emailbydomain.com

Auto manuals search

http://auto.somanuals.com

TV manuals search

http://tv.somanuals.com