Panasonic

Compact Plain Paper Fax with DECT

Operating Instructions

Model No. **KX-FC238HK**

Please read these operating instructions before using the unit and save for future reference.

This unit is compatible with Caller ID. To use these features, you must subscribe to the appropriate service of your service provider.

Download from Www.Somanuals.com. All Manuals Search And Download.

How to use the operating instructions

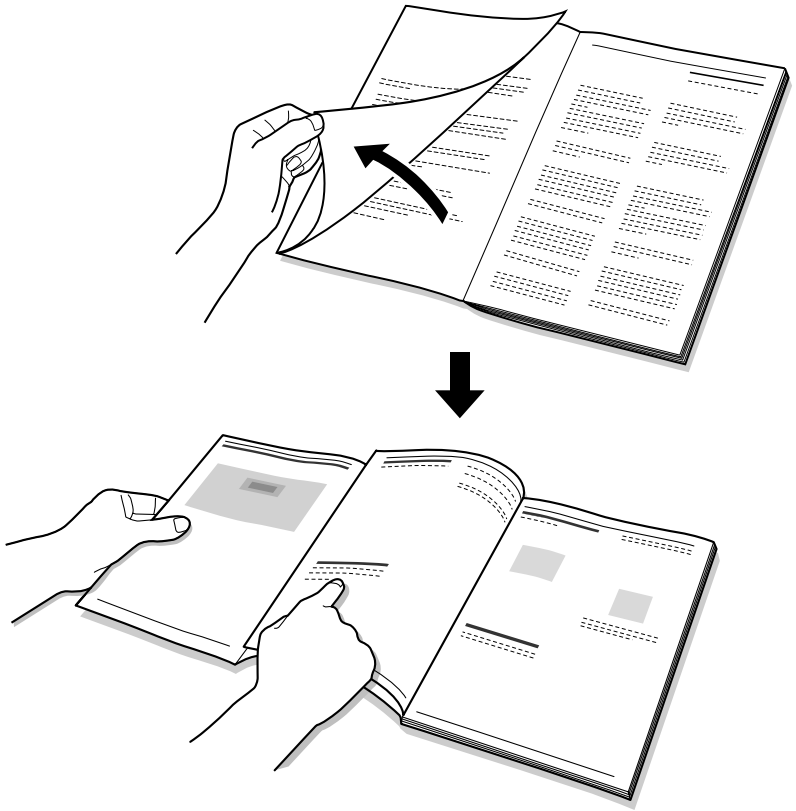

When following operating instructions, always keep the front cover page (next page) open for easy reference to the buttons.

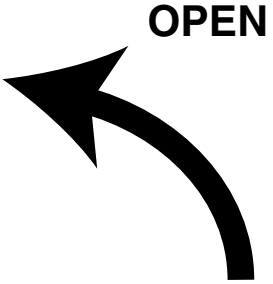

Download from Www.Somanuals.com. All Manuals Search And Download.

Location of Controls

Please keep this page open when following operating instructions.
For a description of each button, see page 10, 11.

Base unit

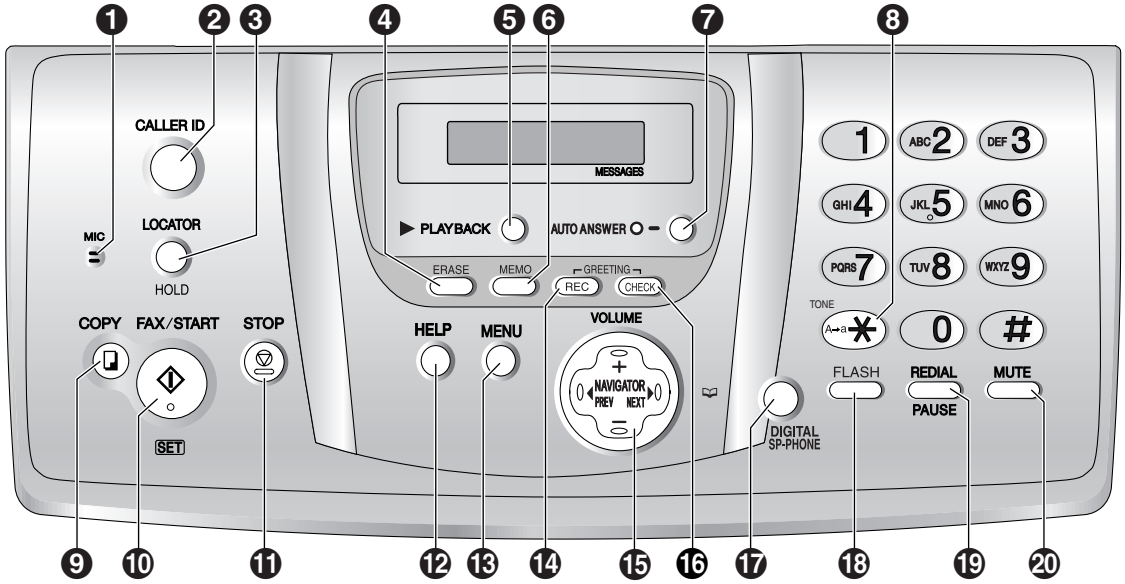

Buttons (Listed in alphabetical order)

AUTO ANSWER ❼
CALLER ID ❷
COPY ❾
DIGITAL SP-PHONE ⓱
ERASE ❹
FAX/START ❿
FLASH ⓲
GREETING/CHECK ⓰
GREETING/REC ⓮
HELP ⓬
HOLD ❸
LOCATOR ❸
MEMO ❻
MENU ⓭
MIC ❶
MUTE ⓴
NAVIGATOR ⓯
PAUSE ⓳
PLAYBACK ❺
REDIAL ⓳
SET ❿
START ❾
STOP ⓫
TONE ❽
VOLUME ⓯

Handset

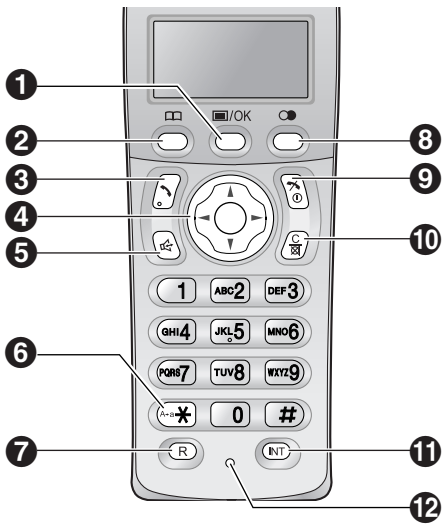

Buttons

/OK (Menu/OK) ❶
(Phonebook) ❷
(Talk) ❸
Navigator ❹
(Speakerphone) ❺
(Tone) ❻
R (Flash) ❼
(Redial/Pause) ❽
(Off/Power) ❾
C/ (Clear/Mute) ❿
INT (Intercom) ⓫
Microphone ⓬

Download from Www.Somanuals.com. All Manuals Search And Download.

Thank you for purchasing a Panasonic fax machine.

For your future reference

Date of purchase

Serial number (found on the rear of the unit)

Dealer's name and address

Dealer's telephone number

Attach your sales receipt here.

Caution:

- Note that the images of copied or received documents will remain on the used ink film. Use discretion when disposing of the used ink film.
- Do not rub or use an eraser on the printed side of recording paper, as the print may smear.

Download from Www.Somanuals.com. All Manuals Search And Download.

Important safety instructions

When using this unit, basic safety precautions should always be followed to reduce the risk of fire, electric shock, or personal injury.

1. Read and understand all instructions.
2. Follow all warnings and instructions marked on this unit.
3. Unplug this unit from power outlets before cleaning. Do not use liquid or aerosol cleaners. Use a damp cloth for cleaning.
4. Do not use this unit near water, for example near a bathtub, wash bowl, kitchen sink, etc.
5. Place the unit securely on a stable surface. Serious damage and/or injury may result if the unit falls.
6. Do not cover slots and openings on the unit. They are provided for ventilation and protection against overheating. Never place the unit near radiators, or in a place where proper ventilation is not provided.
7. Use only the power source marked on the unit. If you are not sure of the type of power supplied to your home, consult your dealer or local power company.
8. For safety purposes this unit is equipped with a grounded plug. If you do not have this type of outlet, please have one installed. Do not defeat this safety feature by tampering with the plug.
9. Do not place objects on the power cord. Install the unit where no one can step or trip on the cord.
10. Do not overload power outlets and extension cords. This can result in the risk of fire or electric shock.
11. Never push any objects through slots in this unit. This may result in the risk of fire or electric shock. Never spill any liquid on the unit.
12. To reduce the risk of electric shock, do not disassemble this unit. Take the unit to an authorised service centre when service is required. Opening or removing covers may expose you to dangerous voltage or other risks. Incorrect reassembly can cause electric shock when the unit is subsequently used.
13. Unplug this unit from power outlets and refer servicing to an authorised service centre when the following conditions occur:
    A. When the power cord is damaged or frayed.
    B. If liquid has been spilled into the unit.
    C. If the unit has been exposed to rain or water.
    D. If the unit does not work normally by following the operating instructions. Adjust only controls covered by the operating instructions. Improper adjustment may require extensive work by an authorised service centre.
    E. If the unit has been dropped or physically damaged.
    F. If the unit exhibits a distinct change in performance.
14. During thunderstorms, avoid using telephones except cordless types. There may be a remote risk of an electric shock from lightning.
15. Do not use this unit to report a gas leak, when in the vicinity of the leak.

SAVE THESE INSTRUCTIONS

Download from Www.Somanuals.com. All Manuals Search And Download.

CAUTION:

Installation

- Never install telephone wiring during a lightning storm.
- Never install telephone jacks in wet locations unless the jack is specifically designed for wet locations.
- Never touch uninsulated telephone wires or terminals unless the telephone line has been disconnected at the network interface.
- Use caution when installing or modifying telephone lines.
- Do not touch the plug with wet hands.
- This unit should not be used near emergency/intensive care medical equipment and should not be used by people with pacemakers.

Battery

To reduce the risk of fire or injury to persons, read and follow these instructions.

- Use only the battery(ies) specified.
- Do not dispose of the battery(ies) in a fire. They may explode. Check with local waste management codes for special disposal instructions.
- Do not open or mutilate the battery(ies). Released electrolyte is corrosive and may cause burns or injury to the eyes or skin. The electrolyte may be toxic if swallowed.
- Exercise care when handling the battery(ies). Do not allow conductive materials such as rings, bracelets or keys to touch the battery(ies), otherwise a short circuit may cause the battery(ies) and/or the conductive material to overheat and cause burns.
- Charge the battery(ies) provided with or identified for use with this product only in accordance with the instructions and limitations specified in these operating instructions.
- Only use the included base unit (or charger) to charge the battery(ies). Do not tamper with the base unit (or charger). Failure to follow these instructions may cause the battery(ies) to swell or explode.

WARNING:

- To prevent the risk of fire or electrical shock, do not expose this product to rain or any type of moisture.
- Unplug this unit from power outlets if it emits smoke, an abnormal smell or makes unusual noise. These conditions can cause fire or electric shock. Confirm that smoke has stopped and contact an authorised service centre.

Download from Www.Somanuals.com. All Manuals Search And Download.

For best performance

Battery charge

- Place the handset on the cradle of the base unit for about **7 hours** before initial use.
- For details, see page 20.

Operating distance and noise

- The base unit and handset use radio waves to communicate with each other.
  For maximum distance and noise-free operation, we recommend the following:

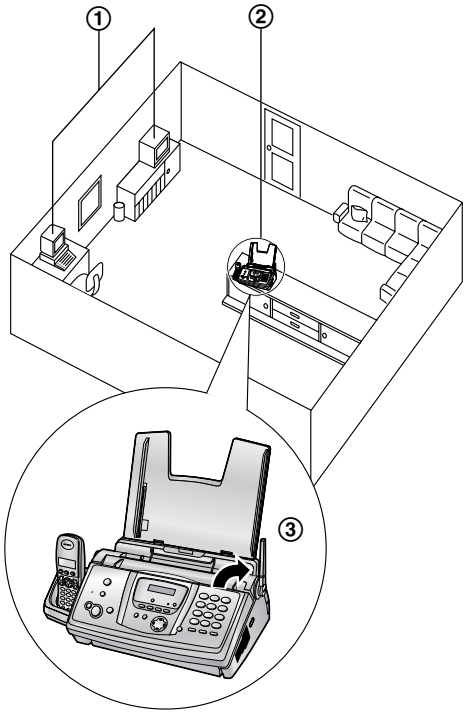

① Placing your base unit away from electrical appliances such as TVs, radios, personal computers or other phones.
② Placing the base unit in a HIGH and CENTRAL location with no obstructions such as walls.
③ Raising the antenna vertically.

Environment

- Keep the unit away from electrical noise generating devices, such as fluorescent lamps and motors.
- The unit should be kept free from dust, high temperature and vibration.
- The unit should not be exposed to direct sunlight.
- Do not place heavy objects on top of the unit.
- The unit should be kept away from heat sources such as heaters, kitchen stoves, etc. It should not be placed in rooms where the temperature is less than 5 °C or greater than 35 °C (base unit) / 40 °C (handset). Damp basements should also be avoided.

Routine care

- Wipe the outer surface of the unit with a soft cloth. Do not use benzine, thinner, or any abrasive powder.

Recording paper

- Store unused paper in the original packaging, in a cool and dry place. Not doing so may affect print quality.

Download from Www.Somanuals.com. All Manuals Search And Download.

1. Introduction

Accessories
1.1 Included accessories **8**
1.2 Accessory information **9**
Finding the Controls
1.3 Button descriptions of the base unit . **10**
1.4 Button descriptions of the handset ... **11**
1.5 Display descriptions of the handset .. **12**
1.6 Overview **13**

2. Installation

Base Unit
2.1 Ink film installation / replacement **14**
2.2 Paper tray **16**
2.3 Recording paper **17**
Handset
2.4 Battery installation / replacement **18**

3. Preparation

Connections and Setup
3.1 Connections **19**
3.2 Battery charge **20**
3.3 Turning the handset power ON/OFF **21**
Help Button
3.4 Base unit help function **21**
Volume
3.5 Adjusting handset volume **22**
3.6 Adjusting base unit volume **22**
Initial Programming
3.7 Dialling mode **23**
3.8 Date and time **23**
3.9 Your logo **25**
3.10 Your fax number **26**

4. Telephone

Making and Answering Calls
4.1 Making phone calls **27**
4.2 Answering phone calls **29**
Automatic Dialling
4.3 Handset phonebook **29**
4.4 Base unit phonebook **32**
Caller ID
4.5 Caller ID service **33**
4.6 Viewing and calling back using caller information **35**
4.7 Editing a caller's telephone number before calling back **36**
4.8 Erasing caller information **36**
4.9 Storing caller information into the phonebook **37**
4.10 Voice mail service **38**

5. Fax

Sending Faxes
5.1 Sending a fax manually **39**
5.2 Documents you can send **40**
5.3 Sending a fax using the base unit phonebook **41**
5.4 Broadcast transmission **41**
Receiving Faxes
5.5 Selecting the way to use your fax machine **43**
5.6 Auto receive **43**
5.7 Manual receive **44**
5.8 Receiving a fax manually – Auto answer OFF **45**
5.9 Receiving a fax automatically – Auto answer ON **47**
5.10 Receive polling (retrieving a fax placed on another fax machine) **48**
5.11 Junk fax prohibitor (preventing fax reception from undesired callers) **49**

6. Duplex Ring

Duplex Ring
6.1 Using with the ring detection feature **50**

7. Copy

Copying
7.1 Making a copy **51**

8. Answering Machine

Greeting
8.1 Recording your greeting message **53**
Incoming Messages
8.2 Listening to recorded messages **54**
Memo Message
8.3 Leaving a message for others or yourself **54**
Remote Operation
8.4 Operating from a remote location **56**

9. Programmable Features

Base Unit
9.1 Base unit programming **58**
9.2 Basic features **59**
9.3 Advanced features **60**
9.4 Direct commands for programming features **63**
Handset
9.5 Handset programming **66**

Download from Www.Somanuals.com. All Manuals Search And Download.

10.Multi-unit Operation

Additional Units
10.1 Operating additional units..... **73**
10.2 Registering a handset to a base unit **73**
10.3 Handset locator **74**
10.4 Intercom between handsets **75**
10.5 Transferring calls between handsets / Conference calls..... **75**
10.6 Copying handset phonebook items .. **76**

11.Useful Information

Useful Information
11.1 Available character entries for the handset..... **77**

12.Help

Error Messages
12.1 Error messages – Reports **79**
12.2 Error messages – Base unit display . **80**
Troubleshooting
12.3 When a function does not work, check here **82**
Jams
12.4 Recording paper jams **88**
12.5 Document jams – sending..... **91**
Cleaning
12.6 Document feeder / scanner glass cleaning..... **92**
12.7 Thermal head cleaning..... **93**

13.General Information

Printed Reports
13.1 Reference lists and reports (Base unit only)..... **95**
Specifications
13.2 Specifications **96**

14.Index

14.1 Index..... **98**

Download from Www.Somanuals.com. All Manuals Search And Download.

1.1 Included accessories

No.	Item	Quantity	Notes
①	Power cord	1	----------
②	Telephone line cord	1	----------
③	Paper tray	1	----------
④	Starter ink film (35 metres long)	1	prints about 105 A4-sized pages.*1
⑤	Handset	1	----------
⑥	Rechargeable batteries	2	AAA (R03) size
⑦	Handset cover	1	----------
⑧	Operating instructions	1	Chinese
		1	English
⑨	Quick installation guide	1	----------

*1 For replacement film, see page 9.

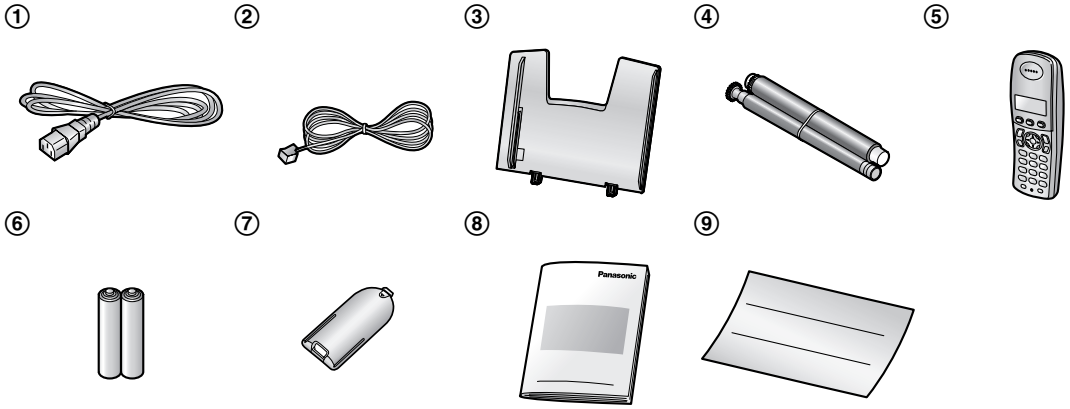

Note:

- If any items are missing or damaged, contact the place of purchase.
- Save the original carton and packing materials for future shipping and transportation of the unit.

Download from Www.Somanuals.com. All Manuals Search And Download.

1.2 Accessory information

1.2.1 Available accessories

Model No.	Item	Specifications/Usage
KX-FA54E	Replacement film*1	35 m × 2 rolls (Each roll will print about 105 A4-sized pages.)
KX-TCA121HK	Additional handset	----------
KX-A272	DECT repeater	----------

*1 We recommend that you buy a full-size replacement film for continuous use of your unit. Please use genuine Panasonic replacement film. **The ink film is not reusable. Do not rewind and use the ink film again.**

Note:

- When replacing the batteries, use only 2 rechargeable AAA-size nickel metal hydride (Ni-MH).

Download from Www.Somanuals.com. All Manuals Search And Download.

1.3 Button descriptions of the base unit

- Keep the front cover page open for button locations.

❶ **[MIC] (Microphone)**
- The built-in microphone.

❷ **[CALLER ID]**
- To use Caller ID features (page 35).

❸ **[LOCATOR]/[HOLD]**
- To locate a handset (page 74).
- To put a call on hold.

❹ **[ERASE]**
- To erase messages (page 53, 54).

❺ **[PLAYBACK]**
- To play messages (page 54).

❻ **[MEMO]**
- To record a memo message (page 54).

❼ **[AUTO ANSWER]**
- To turn the auto answer setting ON/OFF (page 43).

❽ **[TONE]**
- To change from pulse to tone temporarily during dialling when your line has rotary pulse services.

❾ **[COPY]**
- To copy a document (page 51).

❿ **[FAX/START]/[SET]**
- To start sending or receiving a fax.
- To store a setting during programming.

⓫ **[STOP]**
- To stop an operation or programming session.
- To erase a character/number (page 26). Press and hold to erase all characters/numbers.

⓬ **[HELP]**
- To print helpful information for quick reference (page 21).

⓭ **[MENU]**
- To initiate or exit programming.

⓮ **[GREETING/REC]**
- To record a greeting message (page 53).

⓯ **[NAVIGATOR]/[VOLUME]**
- To adjust volume (page 22).
- To search for a stored item (page 32, 41).
- To select features or feature settings during programming (page 58).
- To navigate to the next operation.

⓰ **[GREETING/CHECK]**
- To check a greeting message (page 53).

⓱ **[DIGITAL SP-PHONE]**
- For speakerphone operation (page 28).

⓲ **[FLASH]**
- To access special telephone services for transferring extension calls.

⓳ **[REDIAL]/[PAUSE]**
- To redial the last number dialled from the base unit.
- To insert a pause during dialling.

⓴ **[MUTE]**
- To mute your voice to the other party during a conversation. Press again to resume the conversation.

Download from Www.Somanuals.com. All Manuals Search And Download.

1.4 Button descriptions of the handset

- Keep the front cover page open for button locations.

❶【▤/OK】(Menu/OK)
- To initiate programming.
- To store a setting during programming.
- To lock/unlock the handset buttons (page 28).

❷【📖】(Phonebook)
- To access the phonebook (page 29).

❸【📞】(Talk)
- To make/answer calls (page 27, 29).

❹ Navigator
- To adjust volume (page 22).
- To search for a stored item (page 30).
- To select features or feature settings during programming.
- To navigate to the next operation.

❺【🔊】(Speakerphone)
- For speakerphone operation (page 27).

❻【✱】(Tone)
- To change from pulse to tone temporarily during dialling when your line has rotary pulse services.

❼【R】(Flash)
- To access special telephone services for transferring extension calls.

❽【↻】(Redial/Pause)
- To redial one of the last 10 numbers dialled from the handset (page 27).
- To insert a pause during dialling.

❾【📞⏻】(Off/Power)
- To turn power ON/OFF (page 21).
- To hang up (page 27, 29).
- To stop an operation or programming session.
- To exit programming.

❿【C/🔇】(Clear/Mute)
- To erase a character/number (page 30). Press and hold to erase all characters/numbers.
- To mute your voice to the other party during a conversation. Press again to resume the conversation.

⓫【INT】(Intercom)
- To page or locate another handset (page 75).

⓬ Microphone
- The built-in microphone.

Note:
- Up to 3 menu items can be displayed at a time. To select a menu item not shown on the current page, scroll up or down by pressing the navigator key, 【▲】 or 【▼】, respectively.

Download from Www.Somanuals.com. All Manuals Search And Download.

1.5 Display descriptions of the handset

Display icons

Various icons appear on the handset display to indicate the current status of the unit.

Display icon	Meaning
	Within range of a base unit ● When flashing: Handset is searching for base unit (out of range of base unit, handset is not registered to base unit, no power on base unit)
	Handset is on an outside call
	Call bar is ON (page 69)
	Battery strength (page 20)
“[VE]”	Voice enhancer is set to high or low tone (page 27)
“[N]”	Night mode is ON (page 67)
“[X]”	Key lock is ON (page 28)
“[2]”	Handset number: The left icon shows handset 2 example (page 68)
“-2-”	Base unit number: The left icon shows base unit 2 example (page 68)
	New voice mail message received (voice mail users only; page 38)
[IN USE]	Line is being used by another handset

Download from Www.Somanuals.com. All Manuals Search And Download.

1.6 Overview

1.6.1 Base unit

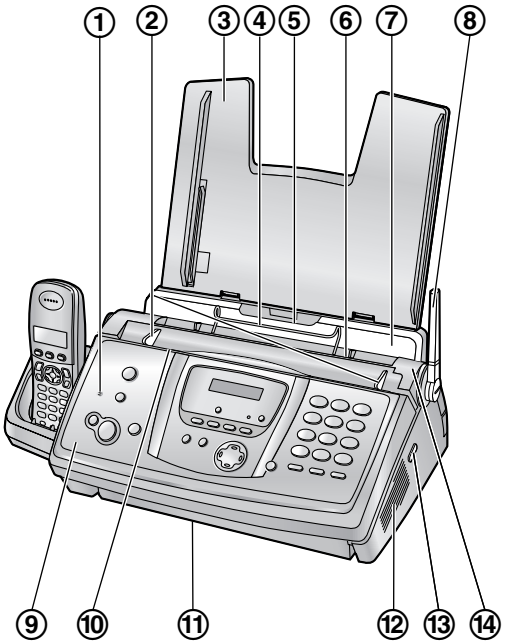

① **Microphone**
② **Document guides**
③ **Paper tray**
④ **Metal recording paper guide**
⑤ **Recording paper entrance**
⑥ **Recording paper exit**
⑦ **Tension plate**
⑧ **Antenna**
⑨ **Front cover**
⑩ **Document entrance**
⑪ **Document exit**
⑫ **Speaker**
⑬ **Green button (Back cover release button)**
⑭ **Back cover**

1.6.2 Handset

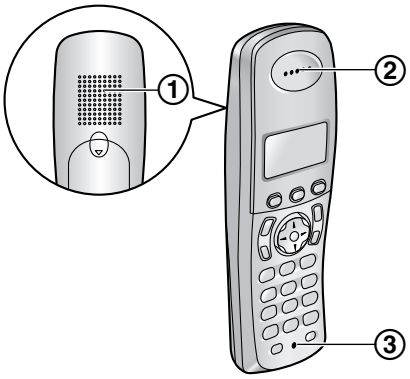

① **Speaker**
② **Receiver**
③ **Microphone**

Removing the shipping tape

Open the front cover by pulling up the centre part (①), then remove the shipping tape (②).

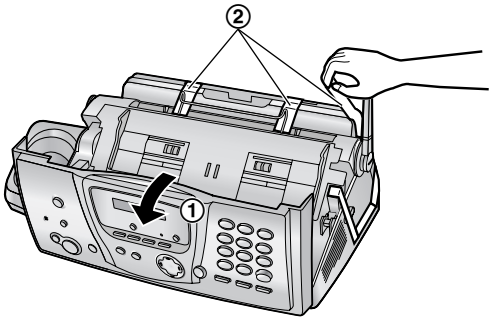

Download from Www.Somanuals.com. All Manuals Search And Download.

2.1 Ink film installation / replacement

The included film roll is a starter ink film.

Important:

- **Remove all blue shipping tape from the unit before installation.**

2.1.1 Installing the ink film

The included film roll is a starter ink film.

1 Open the front cover by pulling up the centre part.

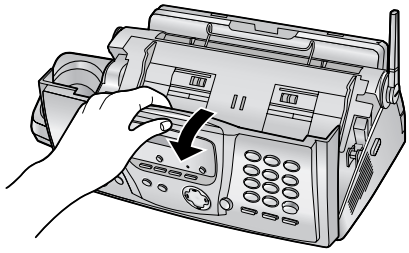

2 Release the back cover by pushing the green button (①).

- You can also release the back cover by pushing in the green lever (②).

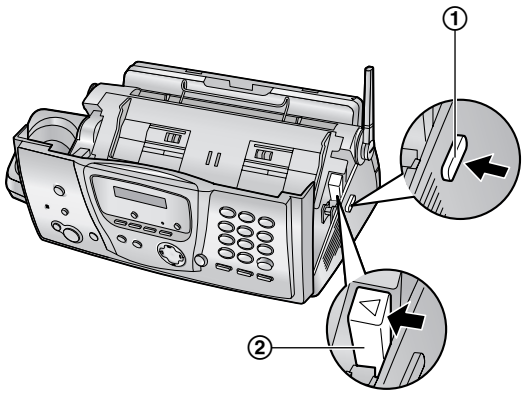

3 Open the back cover.

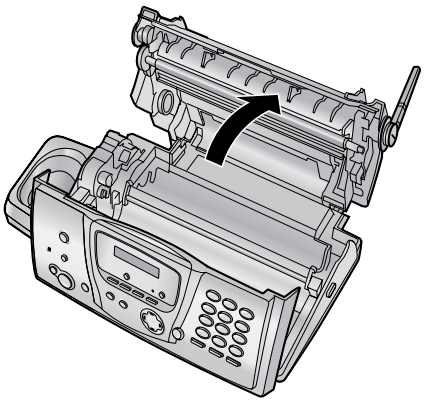

4 Insert the front ink film roll by inserting its blue gear into the left slot of the unit (①). Insert the rear ink film roll by inserting its white gear into the left slot of the unit (②).

- The ink film is safe to touch and will not rub off on your hands like carbon paper.
- Make sure the blue gear (①) and white gear (②) are installed as shown.

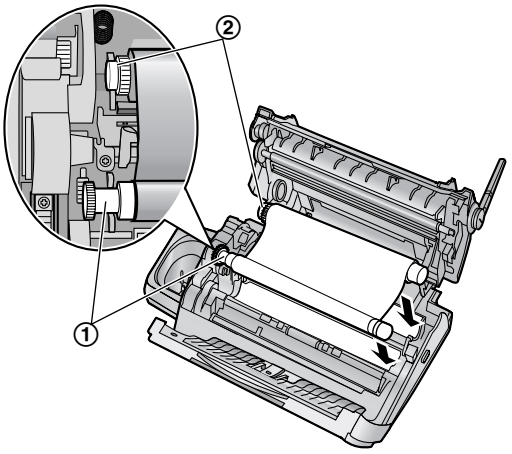

Download from Www.Somanuals.com. All Manuals Search And Download.

5 Turn the gear of the blue core (①) in the direction of the arrow until the ink film is tight (②).

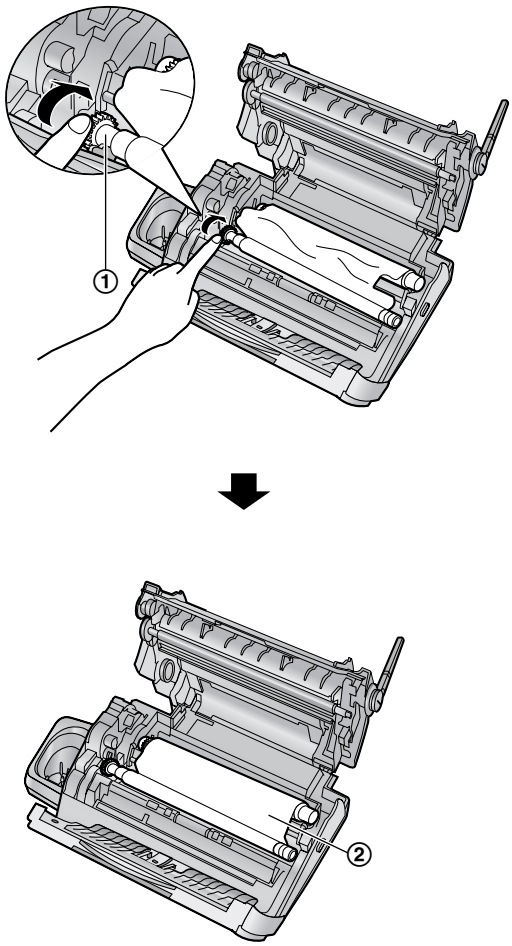

Correct

- The ink film is wrapped around the blue core (③) at least once.

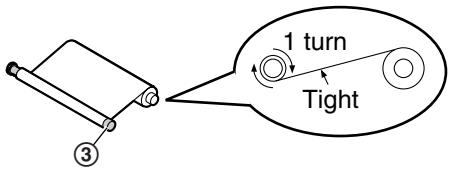

Incorrect

- The ink film is not wrapped around the blue core (④).

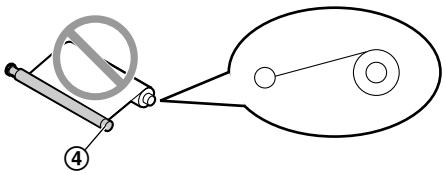

- The ink film is reversed.

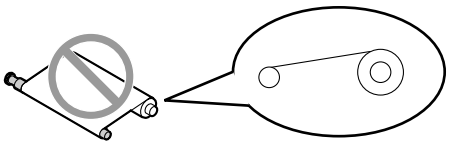

- The ink film is slack or creased.

6 Close the back cover securely by pushing down on the notched area at both ends (①).

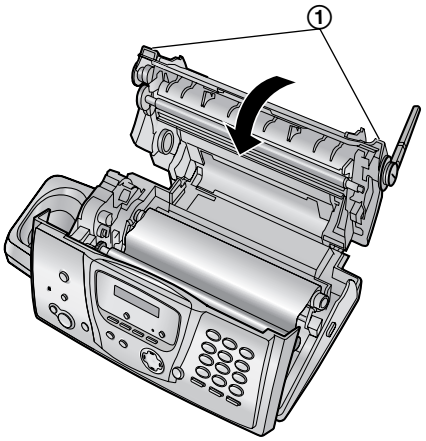

7 Close the front cover securely.

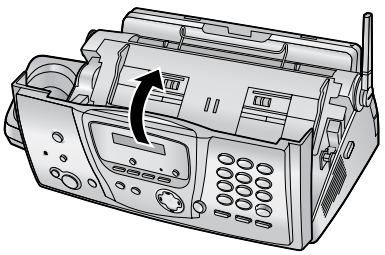

Download from Www.Somanuals.com. All Manuals Search And Download.

2.1.2 Replacing the ink film

To ensure that the unit operates properly, we recommend the use of Panasonic replacement film. See page 9 for accessory information.

- We cannot be responsible for any damage to the unit or degradation of print quality which may occur from the use of non-Panasonic replacement film.

1 Open the covers (see steps 1 to 3 on page 14).

2 Remove the used core (①) and used ink film (②).

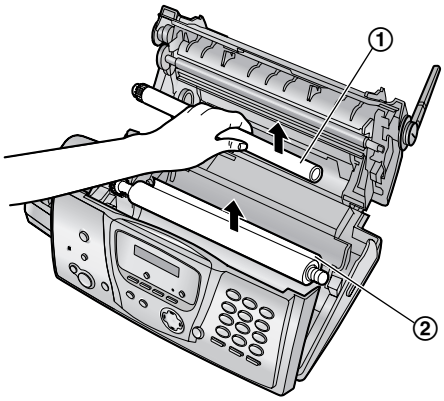

3 Remove the stoppers (①) and tags (②) from the new ink film (③).

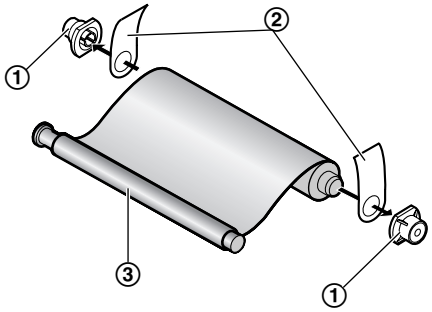

4 Insert the ink film and close the covers (see steps 4 to 7 on page 14).

2.2 Paper tray

Insert the tabs on the paper tray (①) into the slots on the back of the unit (②).

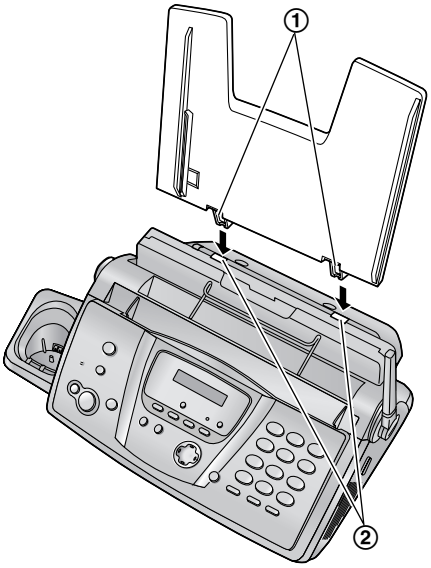

Download from Www.Somanuals.com. All Manuals Search And Download.

2.3 Recording paper

The unit can hold up to 30 sheets of 80 g/m^2 paper.
Please refer to page 96 for information on recording paper.

1 Pull the tension plate forward (①).

2 Fan the paper to prevent paper jams.

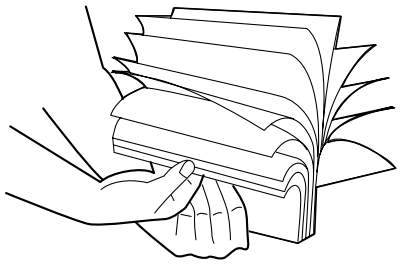

3 Insert the paper, print-side down (①).

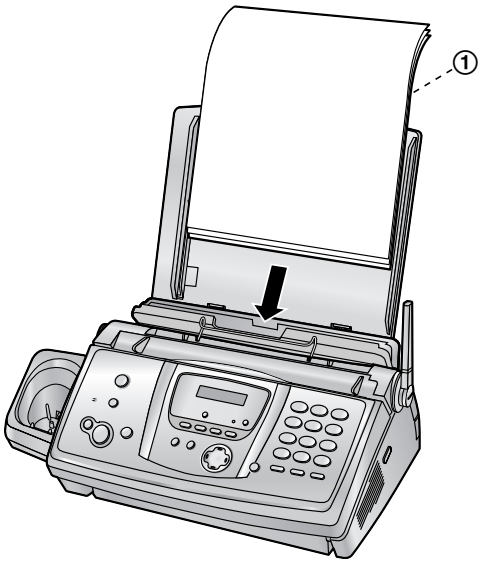

4 Push the tension plate back (①).

- If the paper is not inserted correctly, readjust the paper, or the paper may jam.

Correct **Incorrect**

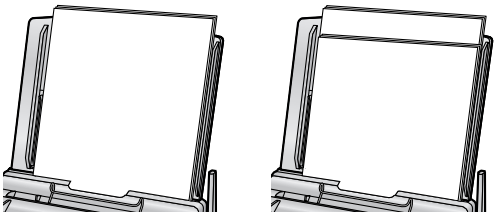

Download from Www.Somanuals.com. All Manuals Search And Download.

2.4 Battery installation / replacement

2.4.1 Installing the batteries

1 Insert the batteries negative (⊖) terminal first.

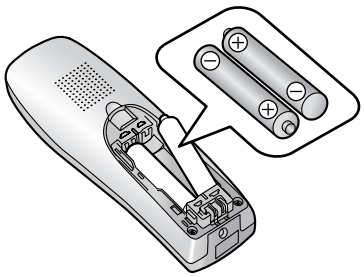

2 Close the handset cover.

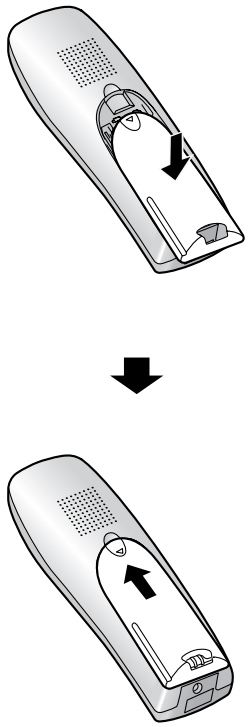

2.4.2 Replacing the batteries

If [▭] flashes even after the handset batteries have been charged for 7 hours, the batteries must be replaced. **We recommend the use of Panasonic batteries.** See page 9 for accessory information.

Important:

- **Use only rechargeable batteries. If you install non-rechargeable batteries and start charging, the batteries may leak electrolyte.**
- **Do not mix old and new batteries.**

1 Press the notch on the handset cover firmly and slide it in the direction of the arrow.

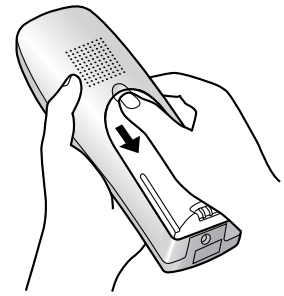

2 Remove the old batteries positive (⊕) terminal first and install the new ones. See the battery installation procedure.

Download from Www.Somanuals.com. All Manuals Search And Download.

3.1 Connections

Important:

- **The unit will not function when there is a power failure. To make calls in emergency situations, you should connect a telephone that can function during a power failure to the telephone line.**

① Power cord
- Connect to the power outlet (220 V – 240 V, 50/60 Hz).

② Telephone line cord
- Connect to a single telephone line jack.

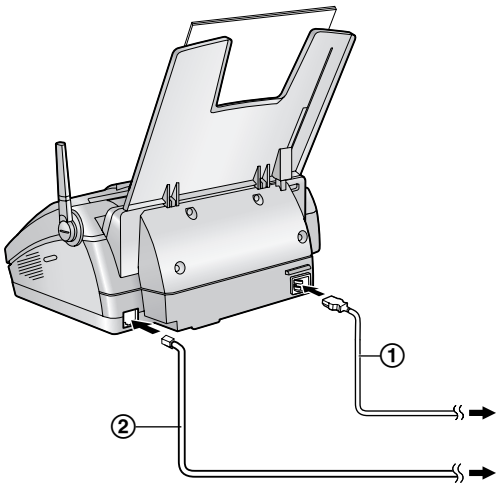

Caution:

- **After connection, you must charge the batteries to make or answer calls with the handset (page 20).**
- **When you operate this product, the power outlet should be near the product and easily accessable.**
- **Be sure to use the telephone line cord included in this unit.**
- **Do not extend the telephone line cord.**

Note:

- If any other device is connected to the same telephone line, this unit may disturb the network condition of the device.
- If you use the unit with a computer and your internet provider instructs you to install a filter (③), please connect the telephone line cord as follows.

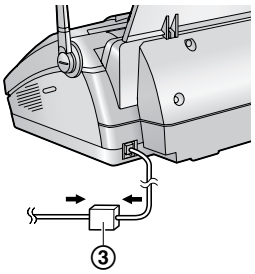

Download from Www.Somanuals.com. All Manuals Search And Download.

3.2 Battery charge

Place the handset on the cradle of the base unit for about 7 hours before initial use.
When charging, the battery icon is shown as follows.

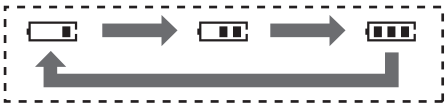

When the batteries are fully charged, remains on the display.

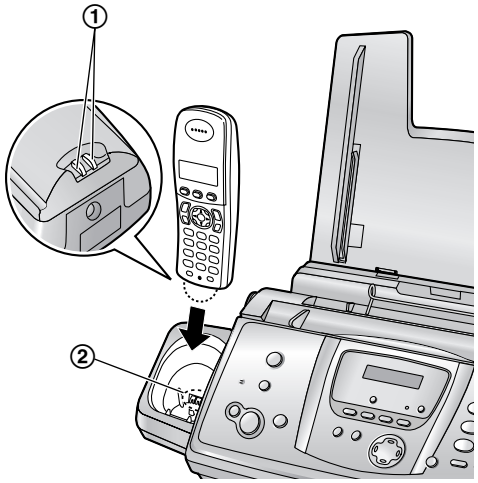

Note:

- Clean the handset charge contacts (①) and the charger charge contacts (②) with a soft, dry cloth once a month, otherwise the batteries may not charge properly. Clean more often if the unit is exposed to grease, dust or high humidity.

Battery strength

You can confirm the battery strength on the handset display.

Battery icons	Battery strength
	High
	Medium
	Low ● When flashing: Needs to be charged

Note:

- If the handset is turned OFF, it will be turned ON automatically when it is placed on the base unit.
- If flashes when you lift the handset off the base unit, charge the batteries at least 15 minutes.

Battery life

After your Panasonic batteries are fully charged, you can expect the following performance:

Ni-MH Batteries (typical 700 mAh)

Operation	Operating Time
While in use (talking)	20 hours approx.
While not in use (standby)	170 hours approx.

Note:

- Actual battery performance depends on a combination of how often the handset is in use (talking) and how often it is not in use (standby).
- Battery operating time may be shortened over time depending on usage conditions and ambient temperature.

Download from Www.Somanuals.com. All Manuals Search And Download.

3.3 Turning the handset power ON/OFF

3.3.1 Power ON

Press 【⏻】 for about 1 second.

- The display will change to the standby mode.

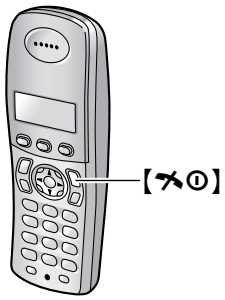

3.3.2 Power OFF

Press 【⏻】 for about 2 seconds.

- The display will go blank.

3.4 Base unit help function

The unit contains helpful information which can be printed for quick reference.

“BASIC SETTINGS”:
How to set the date, time, your logo and fax number.

“FEATURE LIST”:
How to program the features.

“PHONEBOOK”:
How to store names and numbers in the base unit phonebook and how to dial them.

“TAM OPERATION”:
How to use the telephone answering machine.

“FAX RECEIVING”:
How to set the base unit to receive faxes.

“COPIER”:
How to use the copier function.

“REPORTS”:
List of available reports.

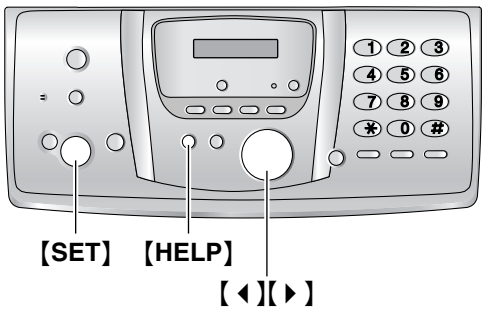

1 Press **【HELP】**.

2 Press 【◀】 or 【▶】 repeatedly to display the desired item.

3 Press **【SET】**.

- The selected item will be printed.

Download from Www.Somanuals.com. All Manuals Search And Download.

3.5 Adjusting handset volume

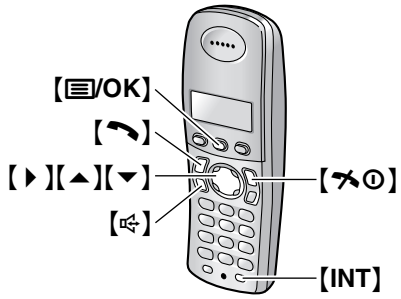

Ringer volume

1. Press 【/OK】.
2. Select “**Handset Setup**”, then press 【】.
3. Select “**Ringer Setup**”, then press 【】.
4. Select “**Ringer Volume**”, then press 【】.
5. Press 【】 or 【】 repeatedly to select the desired volume.
6. Press 【】.
7. Press 【】.

Note:

- Alarms will sound and the handset will ring for intercom calls and when paged even if the ringer is turned OFF.

Ring tone

You can select one of 15 ring tones for outside calls and intercom calls (page 67). Caller ID service users can also use a different ringer for each category (page 34).

Receiver volume

While using 【】 or 【INT】, press 【】 or 【】.

Speaker volume

While using 【】, press 【】 or 【】.

3.6 Adjusting base unit volume

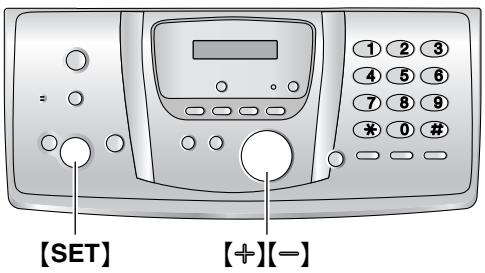

Ringer volume

While the unit is idle, press 【+】 or 【−】.

- If any documents are in the document entrance, you cannot adjust the volume. Confirm that there are no documents in the entrance.

To turn the ringer OFF

1. Press 【−】 repeatedly to display “**RINGER OFF= OK?**”.
2. Press 【SET】.

- When a call is received, the base unit will not ring and will display “**INCOMING CALL**”.
- To turn the ringer back ON, press 【+】.

Ring tone

You can select the ring tones from one of 3 tones for outside calls (feature #17 on page 59).

Speaker volume

While using the speakerphone, press 【+】 or 【−】.

Answering machine volume

While listening to messages, press 【+】 or 【−】.

Download from Www.Somanuals.com. All Manuals Search And Download.

3.7 Dialling mode

If you cannot dial (page 27, 39), change this setting depending on your telephone service.

- Change this setting both on the handset and on the base unit.

3.7.1 With the handset

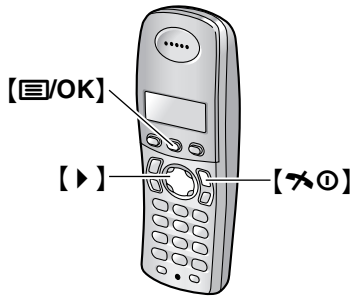

1 Press 【▶】.

2 Select “Base Unit Setup”, then press 【▶】.

3 Enter “0000” (default base unit PIN).
- If you changed the PIN, enter it (page 71).

4 Select “Call Options”, then press 【▶】.

5 Select “Dial Mode”, then press 【▶】.

6 Select the desired setting, then press 【▶】.
– “Tone” (default): For tone dial service.
– “Pulse”: For rotary pulse dial service.

7 Press 【✆】.

3.7.2 With the base unit

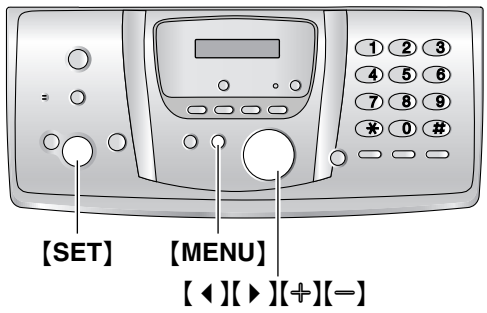

1 Press 【MENU】.

2 Press 【◀】 or 【▶】 repeatedly to display “DIALLING MODE”.

3 Press 【+】 or 【−】 repeatedly to display the desired setting.
– “TONE” (default): For tone dial service.
– “PULSE”: For rotary pulse dial service.

4 Press 【SET】.
- The next feature will be displayed.

5 Press 【MENU】.

3.8 Date and time

You must set the date and time for both the handset and the base unit.
Times are set independently and may not necessarily be identical.

- The other party’s fax machine will print the date and time on each page you send according to your base unit’s date and time setting.
- The accuracy of the clock is approximately ±60 seconds a month.

3.8.1 With the handset

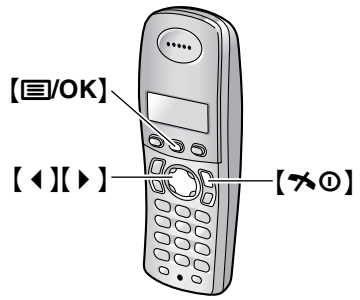

Important:

- **Confirm that the power cord of the base unit is connected.**
- **Ensure that is not flashing.**
- **If a power failure occurs, set the date and time for the handset again.**

1 Press 【▶】.

2 Select “Handset Setup”, then press 【▶】.

3 Select “Time Settings”, then press 【▶】.

4 Select “Set Date & Time”, then press 【▶】.
- The cursor (▮) will appear on the display.

5 Enter the current date/month/year by selecting 2 digits for each.
Example: 10 August, 2005
Press 【1】【0】 【0】【8】 【0】【5】.

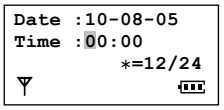

Download from Www.Somanuals.com. All Manuals Search And Download.

6 Enter the current hour/minute by selecting 2 digits for each. Press 【✳】 repeatedly to select "**AM**", "**PM**", or 24-hour time entry.
Example: 3:15 PM (12-hour time entry)

1. Press **【0】【3】【1】【5】**.

```
Date :10-08-05
Time :03:15
          *=12/24
```

2. Press 【✳】 repeatedly to display "**PM**".

```
Date :10-08-05
Time :03:15 PM
          *=12/24
```

7 Press **【☰/OK】**.

8 Press **【⏻】**.

To correct a mistake
Press 【◀】 or 【▶】 to move the cursor to the incorrect number, and make the correction.

Note:
- The date and time on the handset will be lost after a power failure and must be reset, but the base unit has backup to keep the time.

3.8.2 With the base unit

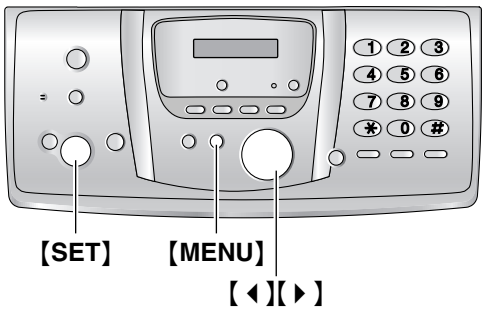

1 Press **【MENU】**.

```
SYSTEM SETUP
PRESS NAVI.[◀ ▶]
```

2 Press 【◀】 or 【▶】 repeatedly to display the following.

```
SET DATE & TIME
       PRESS SET
```

3 Press **【SET】**.
- The cursor (▮) will appear on the display.

```
D:01/M:01/Y:05
TIME: 00:00
```

4 Enter the current date/month/year by selecting 2 digits for each.
Example: 10 August, 2005
Press **【1】【0】【0】【8】【0】【5】**.

```
D:10/M:08/Y:05
TIME: 00:00
```

5 Enter the current hour/minute by selecting 2 digits for each. Press 【✳】 repeatedly to select "**AM**", "**PM**", or 24-hour time entry.
Example: 3:15PM (12-hour time entry)

1. Press **【0】【3】【1】【5】**.

```
D:10/M:08/Y:05
TIME: 03:15
```

2. Press 【✳】 repeatedly to display "**PM**".

```
D:10/M:08/Y:05
TIME: 03:15PM
```

6 Press **【SET】**.
- The next feature will be displayed.

7 Press **【MENU】**.

To correct a mistake
Press 【◀】 or 【▶】 to move the cursor to the incorrect number, and make the correction.

Download from Www.Somanuals.com. All Manuals Search And Download.

3.9 Your logo

Your logo will be printed on the top of each page sent from your unit.
The logo can be your name or the name of your company.

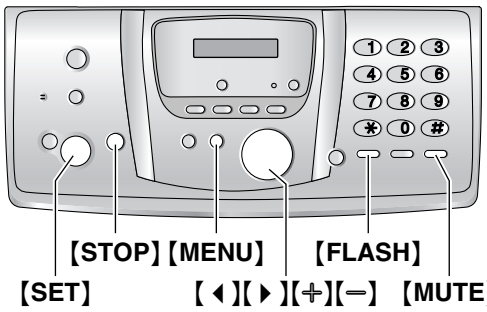

1 Press 【MENU】.

```
SYSTEM SETUP
PRESS NAVI.[◀ ▶]
```

2 Press 【◀】 or 【▶】 repeatedly to display the following.

```
YOUR LOGO
      PRESS SET
```

3 Press 【SET】.
- The cursor (▮) will appear on the display.

```
LOGO=▮
```

4 Enter your logo, up to 30 characters. See the following character table for details.

5 Press 【SET】.
- The next feature will be displayed.

6 Press 【MENU】.

To select characters with the base unit dial keypad

Keypad	Characters
【1】	Space # & ' ( ) * , − . / 1
【2】	A B C 2
	a b c 2
【3】	D E F 3
	d e f 3
【4】	G H I 4
	g h i 4
【5】	J K L 5
	j k l 5
【6】	M N O 6
	m n o 6
【7】	P Q R S 7
	p q r s 7
【8】	T U V 8
	t u v 8
【9】	W X Y Z 9
	w x y z 9
【0】	Space 0
【✳】	To change uppercase or lowercase letter.
【FLASH】	To enter a hyphen.
【MUTE】	To insert a space.
【STOP】	To delete a digit.

Note:
- To enter another character that is located on the same dial key, press 【▶】 to move the cursor to the next space.

To enter your logo

Example: "BILL"

1. Press 【2】 2 times.

```
LOGO=B
```

2. Press 【4】 3 times.

```
LOGO=BI
```

3. Press 【5】 3 times.

```
LOGO=BIL
```

4. Press 【▶】 to move the cursor to the next space and press 【5】 3 times.

```
LOGO=BILL
```

To change uppercase or lowercase letters

Pressing the 【✳】 button will change to uppercase or lowercase letters alternately.

Download from Www.Somanuals.com. All Manuals Search And Download.

1. Press **[2]** 2 times.

```
LOGO=B
```

2. Press **[4]** 3 times.

```
LOGO=BI
```

3. Press **[✳]**.

```
LOGO=Bi
```

4. Press **[5]** 3 times.

```
LOGO=Bi1
```

To correct a mistake

Press **[◀]** or **[▶]** to move the cursor to the incorrect character, and make the correction.

To delete a character

Press **[◀]** or **[▶]** to move the cursor to the character you want to delete and press **[STOP]**.

- To erase all characters, press and hold **[STOP]**.

To insert a character

1. Press **[◀]** or **[▶]** to move the cursor to the position to the right of where you want to insert the character.
2. Press **[MUTE]** to insert a space and enter the character.

To select characters using [+] or [−]

Instead of pressing the dial keys, you can select characters using **[+]** or **[−]**.

1. Press **[−]** repeatedly to display the desired character. Characters will be displayed in the following order:
   ① Uppercase letters
   ② Number
   ③ Symbol
   ④ Lowercase letters
   - If you press **[+]**, the order will be reversed.
2. Press **[▶]** to insert the character.
3. Return to step 1 to enter the next character.

3.10 Your fax number

Your fax number will be printed on the top of each page sent from your unit.

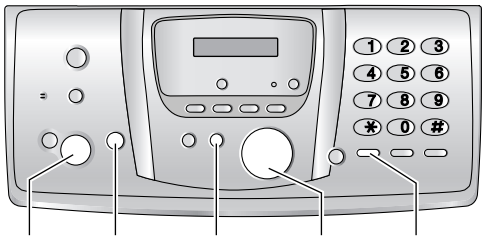

[SET] [STOP] [MENU] [◀] [▶] [FLASH]

1 Press **[MENU]**.

```
SYSTEM SETUP
PRESS NAVI.[◀ ▶]
```

2 Press **[◀]** or **[▶]** repeatedly to display the following.

```
YOUR FAX NO.
      PRESS SET
```

3 Press **[SET]**.

- The cursor (▮) will appear on the display.

```
NO.=▮
```

4 Enter your fax number, up to 20 digits.

Example:

```
NO.=1234567▮
```

5 Press **[SET]**.

- The next feature will be displayed.

6 Press **[MENU]**.

Note:

- The **[✳]** button enters a "+" and the **[#]** button enters a space.
  Example: +234 5678
  Press **[✳][2][3][4][#][5][6][7][8]**.
- To enter a hyphen in a telephone number, press **[FLASH]**.

To correct a mistake

Press **[◀]** or **[▶]** to move the cursor to the incorrect number, and make the correction.

To delete a number

Press **[◀]** or **[▶]** to move the cursor to the number you want to delete and press **[STOP]**.

- To erase all numbers, press and hold **[STOP]**.

Download from Www.Somanuals.com. All Manuals Search And Download.

4.1 Making phone calls

4.1.1 With the handset

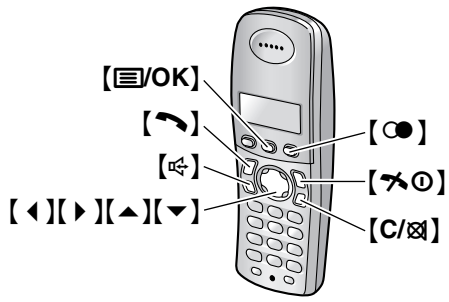

1 Lift the handset and press 【】 or 【】.

2 Dial the telephone number.

3 When finished talking, press 【】 or place the handset on the base unit.

Speakerphone operation

For best performance, please note the following:

– Use the speakerphone in a quiet environment.
– Speak alternately with the caller.
– If you or the other party have difficulty hearing each other, press 【】 or 【】 repeatedly to adjust the speaker volume as necessary.

To redial the last number dialled from the handset

Press 【】 or 【】, then press 【】.

To redial automatically

Press 【】, then press 【】.

- If the line is busy, the unit will automatically redial the number up to 11 times. While the handset is waiting to redial, 【】 will flash. While the handset is redialling, mute is automatically turned ON.

Note:

- If mute does not turn OFF after the line is connected, press 【C/】.

To make a call using the redial list

The last 10 telephone numbers dialled from the handset are stored in the redial list.

1. Press 【】.
   - The last number dialled will be displayed.
2. Press 【】 or 【】 repeatedly to select the desired number.
   - To exit the list, press 【】.
3. Press 【】 or 【】.
   - If 【】 is pressed, the unit will redial automatically if the other party's line is engaged.

To edit a number in the redial list before calling it

1. Press 【】.
2. Press 【】 or 【】 repeatedly to select the desired number, then press 【/OK】.
3. Select "**Edit and Call**", then press 【】.
4. Press 【】 or 【】 to move the cursor, then edit the number.
   - Place the cursor on the number you wish to erase, then press 【C/】.
   - Place the cursor to the right of where you want to insert a number, then make the correction.
5. Press 【】 or 【】.

To erase numbers in the redial list

1. Press 【】.
2. Press 【】 or 【】 repeatedly to select the desired number, then press 【/OK】.
3. Select "**Erase**", then press 【】.
   - If you want to erase all numbers in the list, select "**Erase All**", then press 【】.
4. Select "**Yes**", then press 【】.
5. Press 【】.

To store a number from the redial list into the handset phonebook

1. Press 【】.
2. Press 【】 or 【】 repeatedly to select the desired number, then press 【/OK】.
3. Select "**Add Phonebook**", then press 【】.
4. Enter a name, up to 16 characters (see page 77 for character entry), then press 【/OK】.
5. Edit the phone number if necessary, then press 【/OK】.
6. Select the desired category (page 30), then press 【】.
7. Select "**Save**", then press 【】.
8. Press 【】.

Voice enhancer

You can change the tone quality of the receiver while you are on a call. 3 settings are available.

1. Press 【/OK】 during a call.

Download from Www.Somanuals.com. All Manuals Search And Download.

2. Select "**Voice Enhancer**", then press 【▶】.
3. Select the desired setting, then press 【▶】.

Note:

- If you select "**High Tone**" or "**Low Tone**", "**[VE]**" is displayed.

Mute

You can mute your voice during a conversation. While mute is turned ON, you will be able to hear the other party, but the other party will not be able to hear you.

1. To mute your voice, press 【C/⊠】.
2. To return to the conversation, press 【C/⊠】 again.

Key lock

The handset can be locked so that no calls or settings can be made. Incoming calls can be answered, but all other functions are disabled while key lock is ON. Emergency calls (page 71) cannot be made until key lock is turned OFF.

To turn key lock ON, press 【▤/OK】 for about 2 seconds.

- "**[X]**" is displayed.

To turn key lock OFF, press 【▤/OK】 for about 2 seconds.

Note:

- Key lock is turned OFF when the handset is turned OFF.

4.1.2 With the base unit

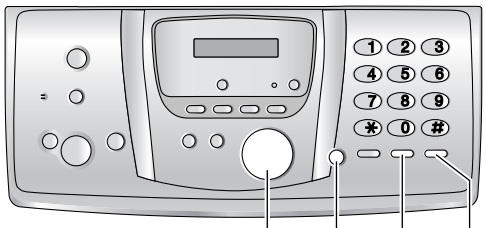

【+】【−】 【REDIAL】
【DIGITAL SP-PHONE】 【MUTE】

1 Press 【DIGITAL SP-PHONE】.

2 Dial the telephone number.

3 When finished talking, press 【DIGITAL SP-PHONE】.

Speakerphone operation

For best performance, please note the following:

– Use the speakerphone in a quiet environment.
– Speak alternately with the caller.
– If you or the other party have difficulty hearing each other, press 【+】 or 【−】 repeatedly to adjust the speaker volume as necessary.

To redial the last number dialled from the base unit

Press 【DIGITAL SP-PHONE】, then press 【REDIAL】.

To redial automatically

Press 【DIGITAL SP-PHONE】, then press 【REDIAL】.

- If the line is busy, the unit will automatically redial the number up to 9 times. While the base unit is redialling, mute is automatically turned ON.

Note:

- If mute does not turn OFF after the line is connected, press 【MUTE】.

Download from Www.Somanuals.com. All Manuals Search And Download.

4.2 Answering phone calls

4.2.1 With the handset

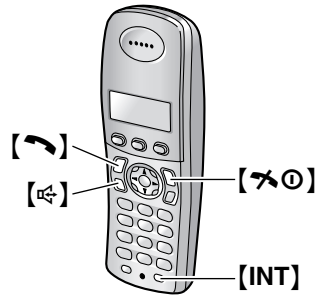

1 Lift the handset and press 【】 or 【】.
- You can also answer a call by pressing any dial key from 【0】 to 【9】, 【✱】, 【#】 or 【INT】. **(Any key answer feature)**

2 When finished talking, press 【】 or place the handset on the base unit.

Auto talk feature
You can answer calls simply by lifting the handset off the base unit. You do not need to press 【】. To turn this feature ON, see page 69.

4.2.2 With the base unit

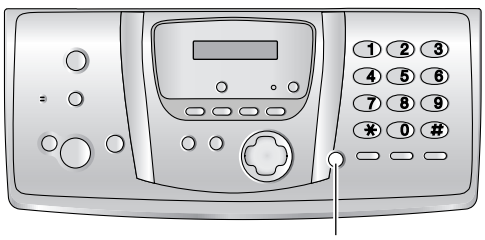

【DIGITAL SP-PHONE】

1 Press 【DIGITAL SP-PHONE】.

2 When finished talking, press 【DIGITAL SP-PHONE】.

4.3 Handset phonebook

The handset phonebook allows you to make calls without having to dial manually. You can add 200 names and phone numbers to the phonebook, assign each phonebook item to the desired category, and search for phonebook items by name or category.
When the system has additional handsets (page 73), each handset can have its own phonebook. You can copy phonebook items between two handsets (page 76).
- The base unit has its own individual phonebook (page 32).

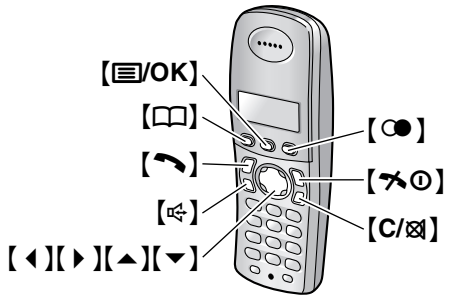

4.3.1 Storing phonebook items

1 Press 【】, then press 【/OK】.

2 Select "**New Entry**", then press 【】.

3 Enter the name, up to 16 characters (see page 77 for character entry), then press 【/OK】.

4 Enter the telephone number, up to 24 digits, then press 【/OK】.

5 Select the desired category for the item, then select 【】.
- Caller ID service users can use additional private category features (page 34).
- You can search for handset phonebook items by category (page 30).
- You can change the category names (page 30).

6 Select "**Save**", then press 【】.
- To program other items, repeat steps 3 to 6.

7 Press 【】.

Note:
- If there is no space to store new items, "**Memory Full**" will be displayed. Erase unnecessary items (page 31).

Download from Www.Somanuals.com. All Manuals Search And Download.

To correct a mistake

1. Press 【◀】 or 【▶】 to move the cursor to the incorrect character/number.
2. Press 【C/⊠】.
   - To erase all characters/numbers, press and hold 【C/⊠】.
3. Enter the correct character/number.

4.3.2 Categories

Categories can help you find items in the handset phonebook quickly and easily. When adding an item to the handset phonebook you can assign it to the desired category. You can change the names of categories assigned for handset phonebook items (“Friends”, “Family”, etc.) and then search for phonebook items by category. Additional category features are available for Caller ID users (page 34).

To change category names

1. Press 【📖】, then press 【☰/OK】.
2. Select “**Category**”, then press 【▶】.
3. Select the category you want to change the name of, then press 【▶】.
4. Select “**Category Name**”, then press 【▶】.
5. Edit the name, up to 10 characters (see page 77 for character entry), then press 【☰/OK】.
6. Press 【↘⏻】.

4.3.3 Making a phone call using the phonebook

Before using this feature, store the desired names and telephone numbers in the handset phonebook (page 29).

1 Press 【📖】.

2 Press 【▲】 or 【▼】 repeatedly to display the desired item.
- To search by first character (index search), see page 30. To search by category, see page 30.

3 Press 【↘】 or 【🔊】.
- The handset will start dialling automatically.

To search for a name by first character (index search)

1. Press 【📖】, then press 【○●】.
2. Select “**Index Search**”, then press 【▶】.
3. Select the character entry mode that contains the character you are searching for, and press 【▶】.
4. Press the dial key (【0】 to 【9】) which contains the character you are searching for (page 77).
   - Press the same dial key repeatedly to display the first item corresponding to each letter located on that dial key.
   - If there is no item corresponding to the letter you selected, the next item will be displayed.
5. Press 【▼】 repeatedly to display the desired item.

To search for a name by category

1. Press 【📖】, then press 【○●】.
2. Select “**Category Search**”, then press 【▶】.
3. Select the category you want to search, then press 【▶】.
   - The first item in that category is displayed.
   - If you select “**All**”, the unit will end the category search.
4. Press 【▼】 repeatedly to display the desired item.

4.3.4 Editing a stored item

1 Press 【📖】.

2 Press 【▲】 or 【▼】 repeatedly to display the desired item.
- To search by first character (index search), see page 30. To search by category, see page 30.

3 Press 【☰/OK】.

4 Select “**Edit**”, then press 【▶】.
- If you do not need to edit the name, skip to step 6.

5 Edit the name. For further details, see the storing procedure on page 29.

6 Press 【☰/OK】.
- If you do not need to edit the telephone number, skip to step 8.

7 Edit the telephone number. For further details, see the storing procedure on page 29.

8 Press 【☰/OK】.

9 Select the desired category for the item, then press 【▶】.

Download from Www.Somanuals.com. All Manuals Search And Download.

10 Select "**Save**", then press **[▶]**.
- To edit other items, repeat steps 2 to 10.

11 Press **[⏻]**.

4.3.5 Erasing stored items

To erase an item

1 Press **[📖]**.

2 Press **[▲]** or **[▼]** repeatedly to display the desired item.
- To search by first character (index search), see page 30. To search by category, see page 30.

3 Press **[☰/OK]**.

4 Select "**Erase**", then press **[▶]**.

5 Select "**Yes**".
- To cancel erasing, press **[⏻]**.

6 Press **[▶]**.

7 Press **[⏻]**.

To erase all items

1 Press **[📖]**, then press **[☰/OK]**.

2 Select "**Erase All**", then press **[▶]**.

3 Select "**Yes**", then press **[▶]**.

4 Select "**Yes**" again, then press **[▶]**.

5 Press **[⏻]**.

4.3.6 One touch dial

Handset dial keys **[1]** to **[9]** can each be used as a one touch dial, allowing you to dial a number from the handset phonebook by simply pressing a dial key.

To assign an item to a one touch dial key

1. Press **[📖]**.
2. Press **[▲]** or **[▼]** repeatedly to select the desired item.
   - To search by first character (index search), see page 30. To search by category, see page 30.
3. Press **[☰/OK]**.
4. Select "**One Touch Dial**", then press **[▶]**.
5. Press **[▲]** or **[▼]** to select the desired dial key number, then press **[▶]**.
   - When the dial key is already used as a one touch dial key, "*" is displayed next to the dial key number. If you select this dial key, "**Overwrite**" is displayed. You can overwrite the previous assignment if necessary.
   - If you do not wish to overwrite, select "**Go Back**".
6. Select "**Save**", then press **[▶]**.
7. Press **[⏻]**.

To make a call using a one touch dial key

1. Press and hold the desired one touch dial key (**[1]** to **[9]**).
   - You can view other one touch dial assignments by pressing **[▲]** or **[▼]**.
2. Press **[✆]** or **[🔊]**.

To erase a one touch dial assignment

1. Press and hold the desired one touch dial key (**[1]** to **[9]**).
2. Press **[☰/OK]**, then press **[▶]**.
3. Select "**Yes**", then press **[▶]**.

Note:
- The number erased from a one touch dial key will not be deleted from the phonebook. To erase from the phonebook, see page 31.

4.3.7 Chain dial

This feature allows you to dial phone numbers in the handset phonebook while you are on a call. This feature can be used, for example, to dial a calling card access number or bank account PIN that you have stored in the handset phonebook, without having to dial manually.

1 During a phone call, press **[📖]**.

2 Press **[▲]** or **[▼]** repeatedly to select the desired item.
- To search by first character (index search), see page 30. To search by category, see page 30.

3 Press **[▶]** to dial the number.

Download from Www.Somanuals.com. All Manuals Search And Download.

4.4 Base unit phonebook

The base unit phonebook allows you to make calls without having to dial manually. You can store 100 names and telephone numbers to the phonebook.

- You can also send faxes using the base unit phonebook (page 41).
- The handset has its own individual phonebook (page 29).

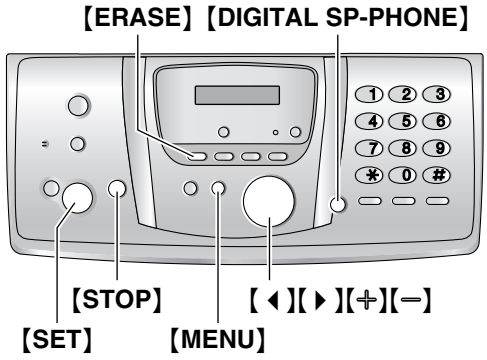

4.4.1 Storing phonebook items

1 Press 【MENU】 repeatedly to display "PHONEBOOK SET".

2 Press 【✳】.

3 Enter the name, up to 16 characters (see page 25 for instructions).

4 Press 【SET】.

5 Enter the telephone number, up to 24 digits.

6 Press 【SET】.
- To program other items, repeat steps 3 to 6.

7 Press 【MENU】.

Helpful hints:
- You can confirm the stored items by printing the fax number list (page 95).

To correct a mistake

Press 【◀】 or 【▶】 to move the cursor to the incorrect character/number, and make the correction.

To delete a character/number

Press【◀】 or 【▶】 to move the cursor to the character/number you want to delete, and press 【STOP】.
- To erase all characters/numbers, press and hold 【STOP】.

4.4.2 Making a phone call using the phonebook

Before using this feature, store the desired names and telephone numbers in the base unit phonebook (page 32).

1 Press 【▶】.

2 Press 【+】 or 【−】 repeatedly to display the desired item.

3 Press 【DIGITAL SP-PHONE】.
- The base unit will start dialling automatically.

To search for a name by initial
Example: "LISA"

1. Press 【▶】.
2. Press 【+】 or 【−】 to initiate the phonebook.
3. Press 【5】 repeatedly to display any name with the initial "L" (see the character table, page 25).
   - To search for symbols, press 【1】.
4. Press 【−】 repeatedly to display "LISA".
   - To stop the search, press 【STOP】.
   - To dial the displayed party, press 【DIGITAL SP-PHONE】.

4.4.3 Editing a stored item

1 Press 【▶】.

2 Press 【+】 or 【−】 repeatedly to display the desired item.

3 Press 【MENU】.

4 Press 【✳】.
- If you do not need to edit the name, skip to step 6.

5 Edit the name. For further details, see the storing procedure on page 32.

6 Press 【SET】.
- If you do not need to edit the telephone number, skip to step 8.

7 Edit the telephone number. For further details, see the storing procedure on page 32.

8 Press 【SET】.

4.4.4 Erasing a stored item

1 Press 【▶】.

Download from Www.Somanuals.com. All Manuals Search And Download.

2 Press 【+】 or 【−】 repeatedly to display the desired item.

3 Press 【MENU】.

4 Press 【#】.
- To cancel erasing, press 【STOP】.

5 Press 【SET】.

Another method to erase a stored item

1. Press 【▶】.
2. Press 【+】 or 【−】 repeatedly to display the desired item.
3. Press 【ERASE】.
4. Press 【SET】.

4.5 Caller ID service

This unit is compatible with Caller ID service offered by your local telephone company. To use this feature, you must subscribe to Caller ID service.

Important:
- **This unit will only display the caller's telephone number and name.**
- **This unit will not support future additional telephone services.**
- **This unit cannot support services based on the "DTMF based subscriber line protocol".**
- **Depending on the service of the local telephone company, the date/time of the call or the caller's name may not be displayed.**

Make sure the following ring setting is set to 2 or more rings beforehand.
– TEL/FAX ring setting (feature #78, page 62)

Note:
- Depending on the service of the local telephone company, caller information may not be displayed on the handset in TEL/FAX mode. In this case, change the TEL/FAX ring setting to 1 (feature #78 on page 62).

4.5.1 How Caller ID is displayed

When an outside call is received, the calling party's telephone number or name will be displayed. You then have the option of whether or not to answer the call.
The unit will automatically store caller information (telephone number, name, date and time of the call) of the last 30 (base unit)/50 (handset) callers. Caller information is stored by the most recent to the oldest call. When the 31st (base unit)/51st (handset) call is received, the oldest call is deleted.
Caller information can be viewed on the display one item at a time (page 35) or confirmed by printing the Caller ID list (page 95).

Note:
- When caller information is received and it matches a telephone number stored in the unit's phonebook:
  – The stored name will be displayed and logged.
  – The handset will use the ring tone assigned to the caller's category.
- If the unit is connected to a PBX (Private Branch Exchange) system, caller information

Download from Www.Somanuals.com. All Manuals Search And Download.

may not be received properly. Consult your PBX supplier.

- If the unit cannot receive caller information, the following will be displayed:
  "**OUT OF AREA**": The caller dialled from an area which does not provide Caller ID service.
  "**PRIVATE CALLER**": The caller requested not to send caller information.

To confirm caller information by printing the Caller ID list

– To print manually, see page 95.
– To print automatically after every 30 new calls, activate feature #26 (page 60).

Call Waiting Caller ID (Handset only)

This is a service of your service provider and will only operate if you have subscribed to this service. When you hear a call waiting tone during a conversation, the display will show the second caller's information. You can answer the second call, keeping the first call on hold. Please consult your service provider for details of this service.

Note:

- The second caller's information will not be displayed when:
  – the base unit is in use, or
  – another telephone on the same line is in use.

Category features for handset phonebook

Categories can help you identify who is calling by using different ring tones for different categories of callers.
When adding an item to the handset phonebook you can assign it to the desired category (page 30). When a call is received from a caller assigned to a category, the category's ring tone you select is used.

Changing category ring tones

You can select a ring tone for each category. If you select "**Ext. Ringtone**", the unit will use the external ring tone you set on page 67 when calls from this category are received. The default setting is "**Ext. Ringtone**".

1. Press **[📖]**, then press **[☰/OK]**.
2. Select "**Category**", then press **[▶]**.
3. Select a category, then press **[▶]**.
4. Select the current setting of the category ring tone, then press **[▶]**.
5. Select the desired ring tone, then press **[▶]**.
6. Press **[✂⏻]**.

Download from Www.Somanuals.com. All Manuals Search And Download.

4.6 Viewing and calling back using caller information

You can easily view caller information and call back.

Important:

- **Calling back will not be possible if the caller information does not include a telephone number.**

4.6.1 With the handset

The display will show the number of new calls in standby mode.

Example:

```
10 Calls
 10 Aug  3:15
```

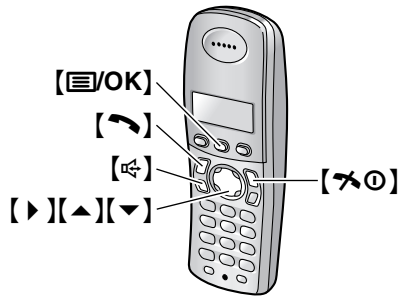

1 Press 【☰/OK】.

2 Select "`Caller List`", then press 【▶】.
- The most recent call is displayed.

3 Press 【▼】 to search from the most recently received caller information.
- If you press 【▲】, the display order will be reversed.
- A ✓ is displayed next to items which have already been viewed or answered, even if they were viewed or answered using another handset.

4 Press 【✆】 or 【🔊】 to return the call.
- The handset will start dialling automatically.

To stop viewing

Press 【✆⏻】 after step 3.

4.6.2 With the base unit

The display will show the number of new calls in standby mode.

Example:

```
10 CALLS
10:59
```

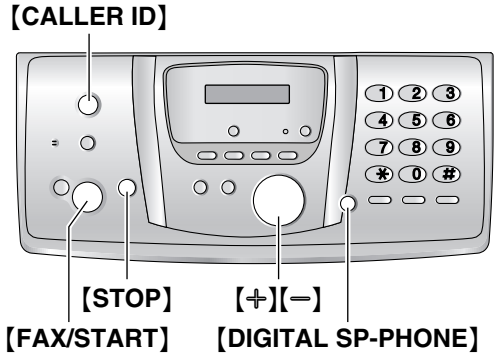

1 Press 【CALLER ID】.

2 Press 【−】 to search from the most recently received caller information.
- If you press 【+】, the display order will be reversed.

3 Press 【DIGITAL SP-PHONE】 to return the call.
- The unit will start dialling automatically.
- To send a fax, insert the document FACE DOWN and press 【FAX/START】.

To change the way caller information is displayed

Press 【CALLER ID】 repeatedly after step 2.

Example:

```
SAM LEE
20 Jul 11:20   ✓
```

↕

```
1345678901
20 Jul 11:20   ✓
```

- A ✓ on the display means the item has already been viewed or answered.

Display while viewing

When the unit could not receive a name, the display will show "`NO NAME RCVD`".

To stop viewing

Press 【STOP】 after step 2.

Download from Www.Somanuals.com. All Manuals Search And Download.

4.7 Editing a caller's telephone number before calling back

- Keep the front cover page open for button locations.

4.7.1 With the handset

1 Press **[/OK]**.

2 Select "**Caller List**", then press **[ ]**.

3 Press **[ ]** or **[ ]** repeatedly to display the desired item.

4 **To add a number**
Press the dial key (**[0]** to **[9]**).
- The number you pressed is added to the top of the current number.

To erase a number
Press **[/OK]**, select "**Edit and Call**", then press **[ ]**.
Press **[ ]** or **[ ]** to place the cursor on the number you wish to erase, then press **[C/]**.

5 Press **[ ]** or **[ ]**.

4.7.2 With the base unit

1 Press **[CALLER ID]**.

2 Press **[ ]** or **[ ]** repeatedly to display the desired item.

3 Press **[CALLER ID]** repeatedly to display the telephone number.

4 To insert a number in front of the telephone number, press the desired dial key (**[0]** to **[9]**).
- You can also initiate the editing mode by pressing **[ ]**.

5 Press **[DIGITAL SP-PHONE]** to call back the edited number.
- The unit will start dialling automatically.
- To send a fax, insert the document FACE DOWN and press **[FAX/START]**.

To correct a mistake

1. Press **[ ]** or **[ ]** to move the cursor to the incorrect number.
2. Press **[STOP]** to delete the number.
3. Enter the correct number.

To delete a number

Press **[ ]** or **[ ]** to move the cursor to the number you want to delete and press **[STOP]**.

To insert a number

1. Press **[ ]** or **[ ]** to move the cursor to the position to the right of where you want to insert the number.
2. Enter the number.

4.8 Erasing caller information

- Keep the front cover page open for button locations.

4.8.1 With the handset

1 Press **[/OK]**.

2 Select "**Caller List**", then press **[ ]**.

3 Press **[ ]** or **[ ]** repeatedly to display the desired item, then press **[/OK]**.

4 Select "**Erase**", then press **[ ]**.
- To erase all items, select "**Erase All**", then press **[ ]**.

5 Select "**Yes**", then press **[ ]**.

6 Press **[ ]**.

4.8.2 With the base unit

To erase all caller information

1. Press **[CALLER ID]**.
2. Press **[ERASE]**.
3. Press **[SET]**.
   - To cancel erasing, press **[STOP]**.

To erase specific caller information

1. Press **[CALLER ID]**.
2. Press **[ ]** or **[ ]** repeatedly to display the desired item.
3. Press **[ ]**.
   - To cancel erasing, press **[STOP]** 2 times.
4. Press **[SET]**.
   - To erase other items, repeat steps 2 to 4.
5. Press **[STOP]**.

Another method to erase a specific caller information

1. Press **[CALLER ID]**.

Download from Www.Somanuals.com. All Manuals Search And Download.

2. Press 【+】 or 【−】 repeatedly to display the desired item.
3. Press 【ERASE】.
   - To erase other items repeat steps 2 to 3.
4. Press 【STOP】.

4.9 Storing caller information into the phonebook

- Keep the front cover page open for button locations.

Important:

- **This feature is not available if the caller information does not include a telephone number.**

4.9.1 Into the handset phonebook

1 Press 【▤/OK】.

2 Select "**Caller List**", then press 【▶】.

3 Press 【▲】 or 【▼】 repeatedly to display the desired item, then press 【▤/OK】.

4 Select "**Add Phonebook**", then press 【▶】.

5 Enter the name, up to 16 characters (see page 77 for character entry), then press 【▤/OK】.

6 Enter the telephone number, up to 24 digits, then press 【▤/OK】.

7 Select the desired category for the item, then select 【▶】.

8 Select "**Save**", then press 【▶】.

9 Press 【✆】.

Note:

- To edit a name and number, see page 30.
- If there is no space to store new items, "**Memory Full**" will be displayed. Erase unnecessary items (page 31).

4.9.2 Into the base unit phonebook

1 Press 【CALLER ID】.

2 Press 【+】 or 【−】 repeatedly to display the desired item.

3 Press 【MENU】.

4 If a name is required, enter up to 16 characters for the name (page 25).

5 Press 【SET】.

6 Press 【SET】.

Download from Www.Somanuals.com. All Manuals Search And Download.

Note:

- You can confirm the stored items in the base unit phonebook by printing the fax number list (page 95).
- To edit a name and number, see page 32.

4.10 Voice mail service

Voice mail is an automatic answering service offered by your service provider. If you subscribe to this service, your service provider's voice mail system can answer calls for you when you are unavailable to answer the phone or when your line is busy. Messages are recorded by the service provider, not your telephone.
When you have new messages, ✉ will be displayed on the handset.
Please consult your service provider for details of this service.

Note:

- If ✉ still remains on the display even after you have listened to new messages, turn it off by pressing and holding **【C/⊠】** for 2 seconds.

Download from Www.Somanuals.com. All Manuals Search And Download.

5.1 Sending a fax manually

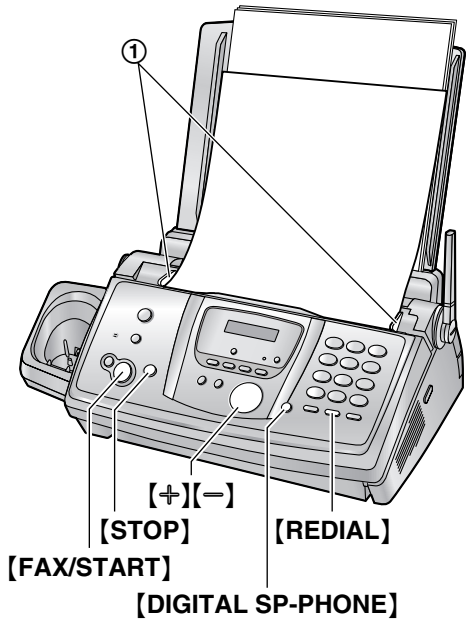

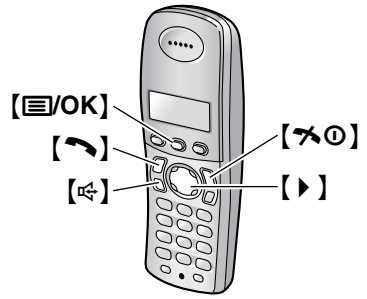

1 Adjust the width of the document guides (①) to fit the actual size of the document.

2 Insert the document (up to 10 pages) FACE DOWN until a single beep is heard and the unit grasps the document.
- If the document guides are not adjusted to fit the document, re-adjust them.

3 If necessary, press 【+】 or 【−】 repeatedly to select the desired resolution.

4 Press **【DIGITAL SP-PHONE】**.

5 Dial the fax number.

6 **When a fax tone is heard:**
Press **【FAX/START】**.

When the other party answers your call:
Ask them to press their start button. When the fax tone is heard, press **【FAX/START】**.

To select the resolution
Select the desired resolution according to the type of document.
– **"STANDARD"**: For printed or typewritten documents with normal-sized characters.
– **"FINE"**: For documents with small print.
– **"SUPER FINE"**: For documents with very small print. This setting is effective only when the other party has a compatible fax machine.
– **"PHOTO"**: For documents containing photographs, shaded drawings, etc.
- Using the **"FINE"**, **"SUPER FINE"** and **"PHOTO"** settings will increase transmission time.
- If the resolution setting is changed during feeding, it will be effective from the next page.

To redial the last number
1. Press **【REDIAL】**.
2. Press **【FAX/START】**.
- If the line is busy, the unit will automatically redial the number up to 5 times.
- To cancel redialling, press **【STOP】**.

To send more than 10 pages at a time
Insert the first 10 pages of the document. Add the other pages (up to 10 at a time) on top of the previously inserted pages before the last page feeds into the unit.

To predial a fax number
You can dial the fax number first before inserting the document. This is convenient if you need to refer to the document for the other party's fax number.
1. Enter the fax number.
2. Insert the document.
3. Press **【FAX/START】**.

To send from memory (Quick scan feature)
You can scan the document into memory before sending. To use this feature, activate feature #34 (page 60) beforehand.
1. Insert the document.

Download from Www.Somanuals.com. All Manuals Search And Download.

2. Enter the fax number.
3. Press **【FAX/START】**.

- The document will be fed into the unit and scanned into memory. The unit will then transmit the data. If the document exceeds the memory capacity, sending will be cancelled and this feature will be turned OFF automatically. You must send the entire document manually.
- This feature cannot be used if the handset is in use, or **【DIGITAL SP-PHONE】** on the base unit, **【】** or **【】** on the handset is pressed.

To send a fax using the handset

1. While talking to the other party, insert the document, then press **【/OK】**.
2. Select "**Fax Start**", then press **【】**.
3. Press **【】** or place the handset on the base unit.

To stop transmission

Press **【STOP】**.

Printing a sending report

A sending report provides you with a printed record of transmission results. To print sending reports, make sure feature #04 is activated (page 59). For an explanation of error messages, see page 79.

Printing a journal report

A journal report provides you with a printed record of the 30 most recent faxes. To print manually, see page 95. To print automatically after every 30 new fax transmissions and receptions, make sure feature #22 is activated (page 60). For an explanation of error messages, see page 79.

5.2 Documents you can send

Minimum document size

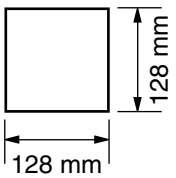

Maximum document size

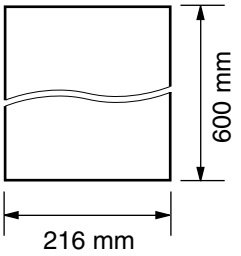

Effective scanning area

- Shaded area will be scanned.

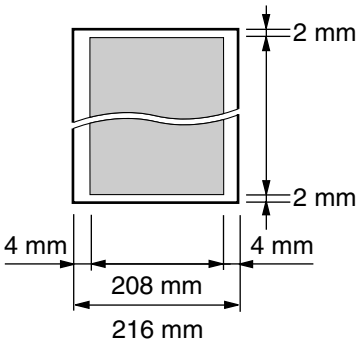

Document weight

- Single sheet: 45 g/m^2 to 90 g/m^2
- Multiple sheets: 60 g/m^2 to 80 g/m^2

Note:

- Remove clips, staples or other fasteners.
- Do not send documents that are on the following types of paper: (Make a copy of the document and send the copy.)
  - Chemically treated paper such as carbon or carbonless duplicating paper
  - Electrostatically charged paper
  - Badly curled, creased or torn paper
  - Paper with a coated surface
  - Paper with a faint image
  - Paper with printing on the opposite side that can be seen through the other side, such as newsprint.
- Check that ink, paste or correction fluid has dried completely.
- To send a document with a width of less than 210 mm, we recommend using a copy machine to copy the original document onto A4 or letter-sized paper, then sending the copied document.

Download from Www.Somanuals.com. All Manuals Search And Download.

5.3 Sending a fax using the base unit phonebook

Before using this feature, store the desired names and telephone numbers into the base unit phonebook (page 32).

- Keep the front cover page open for button locations.

1 Adjust the width of the document guides to fit the actual size of the document.

2 Insert the document (up to 10 pages) FACE DOWN until a single beep is heard and the unit grasps the document.
- If the document guides are not adjusted to fit the document, re-adjust them.

3 If necessary, press 【+】 or 【−】 repeatedly to select the desired resolution (page 39).

4 Press 【▶】.

5 Press 【+】 or 【−】 repeatedly to display the desired item and press 【FAX/START】.

Fax auto redial

If the line is busy or if there is no answer, the unit will automatically redial the number up to 5 times.

- To cancel redialling, press 【STOP】.

If your unit does not send a fax

- Confirm that you have entered the number correctly, and that the number is a fax number.
- Confirm that the other party's fax machine is answering by turning ON the connecting tone feature (feature #76 on page 62).

5.4 Broadcast transmission

By storing base unit phonebook items (page 32) into the broadcast memory, you can send the same document to multiple parties (up to 20). Your programmed items will remain in the broadcast memory, allowing frequent re-use.

- Keep the front cover page open for button locations.

5.4.1 Programming items into the broadcast memory

1 Press 【MENU】 repeatedly to display "PHONEBOOK SET".

2 Press 【#】.
- The number in brackets indicates the number of registered items.

3 Press 【+】 or 【−】 repeatedly to display the desired item.

4 Press 【SET】.
- To program other items, repeat steps 3 and 4 (up to 20 items).

5 Press 【SET】.

Note:

- If you program the wrong item, press 【STOP】 after step 4 to erase the item.
- Confirm the stored items by printing a broadcast programming list (page 95).

5.4.2 Adding a new item into the broadcast memory

After initial programming, you can add new items (up to a combined total of 20).

1 Press 【▶】.

2 Press 【+】 or 【−】 repeatedly to display "<BROADCAST>".

3 Press 【MENU】.

4 Press 【✳】.

5 Press 【+】 or 【−】 repeatedly to display the desired item you want to add.

6 Press 【SET】.
- To add other items, repeat steps 5 and 6 (up to 20 items).

7 Press 【STOP】.

Download from Www.Somanuals.com. All Manuals Search And Download.

5.4.3 Erasing a stored item from the broadcast memory

1 Press [▶].

2 Press [+] or [—] repeatedly to display "<BROADCAST>".

3 Press [MENU].

4 Press [#].

5 Press [+] or [—] repeatedly to display the desired item you want to erase.
- To cancel erasing, press [STOP].

6 Press [SET].

7 Press [SET].
- To erase other items, repeat steps 5 to 7.

8 Press [STOP].

5.4.4 Sending the same document to pre-programmed parties

1 Insert the document FACE DOWN.

2 If necessary, press [+] or [—] repeatedly to select the desired resolution (page 39).

3 Press [▶].

4 Press [+] or [—] repeatedly to display "<BROADCAST>".

5 Press [FAX/START].
- The document will be fed into the unit and scanned into memory. The unit will then send the data to each party, calling each number sequentially.
- After transmission, the stored document will be erased from memory automatically, and the unit will automatically print a report (**Broadcast sending report**).

Note:
- If you select "FINE", "SUPER FINE" or "PHOTO" resolution, the number of pages that the unit can send will decrease.
- If the document exceeds the memory capacity, sending will be cancelled.
- If a party is busy or does not answer, it will be skipped and redialled later up to 5 times.

To send the same document to a one-time group of parties

You can also select a one-time group of parties to send the same document to. After transmission, this group will be deleted.

1. Insert the document.
2. Press [▶].
3. Press [+] or [—] repeatedly to display "<ONE TIME BROAD>".
4. Press [SET] to start programming the parties you want to send the document to.
5. Press [+] or [—] repeatedly to display the desired party.
6. Press [SET].
   - To program other parties, repeat steps 5 and 6 (up to 20 items).
7. Press [FAX/START] to start transmission to the programmed parties.

To cancel broadcast transmission

1. Press [STOP] while "BROADCASTING" is displayed.
   - The display will show "SEND CANCELLED?".
2. Press [SET].

Download from Www.Somanuals.com. All Manuals Search And Download.

5.5 Selecting the way to use your fax machine

Depending on your situation, select the way you prefer to use your fax machine.

Auto receive
– Use as a telephone answering machine and/or fax (TAM/FAX mode)
– Use only as a fax (FAX ONLY mode)

Manual receive
– Use mostly as a telephone (TEL mode)
– Use as a telephone and/or fax (TEL/FAX mode)

5.6 Auto receive

5.6.1 Use as a telephone answering machine and/or fax (TAM/FAX mode)

Your situation
You want to answer phone calls using the telephone answering machine and receive faxes automatically.

Setup
Set the fax machine to TAM/FAX mode (page 47) by pressing **【AUTO ANSWER】** repeatedly.

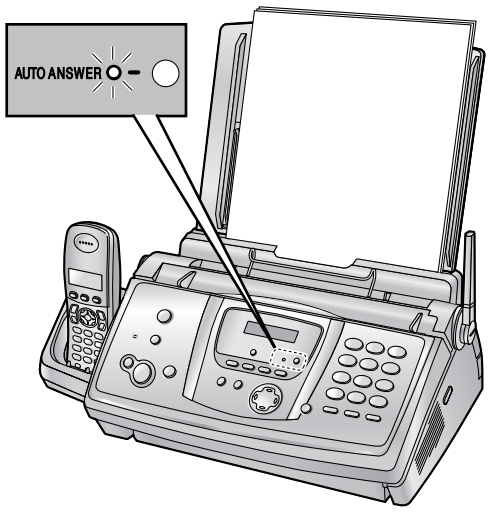

Note:
- Make sure feature #77 is set to "**TAM/FAX**" beforehand (page 62).
- Do not connect an answering machine to the same telephone line. If connected, set the automatic answer feature to OFF by pressing **【AUTO ANSWER】** repeatedly.

How phone calls and faxes are received
If the call is a phone call, the fax machine will record the caller's message automatically.
If a fax calling tone is detected, the fax machine will receive the fax automatically.

5.6.2 Use only as a fax (FAX ONLY mode)

Your situation
You have a separate telephone line just for faxes.

Setup
Set the fax machine to FAX ONLY mode (page 48) by pressing **【AUTO ANSWER】** repeatedly.

Note:
- Make sure feature #77 is set to "**FAX ONLY**" beforehand (page 62).

How faxes are received
All incoming calls will be answered as faxes.

Download from Www.Somanuals.com. All Manuals Search And Download.

5.7 Manual receive

5.7.1 Use mostly as a telephone (TEL mode)

Your situation
You want to answer calls by yourself. If a fax call is received, you must receive the fax manually.

Setup
Set the fax machine to TEL mode (page 45) by pressing **【AUTO ANSWER】** repeatedly.

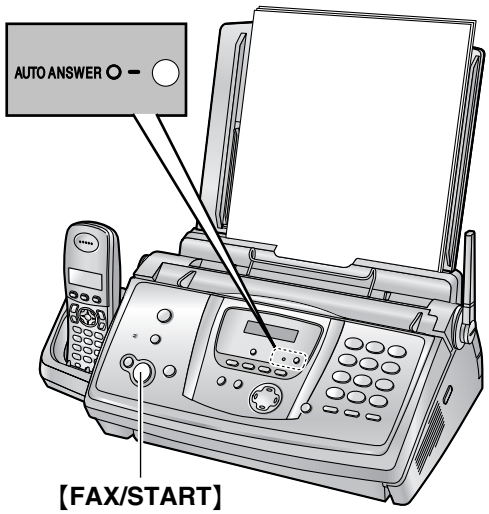

Note:
- Make sure feature #73 is set to **"TEL"** beforehand (page 62).

How to receive phone calls and faxes
You have to answer all calls manually.
To receive a fax, press **【FAX/START】**.

5.7.2 Use as a telephone and/or fax

Your situation
You want to answer phone calls yourself and receive faxes automatically without rings.

Setup
Set the fax machine to TEL/FAX mode (page 46) by pressing **【AUTO ANSWER】** repeatedly.

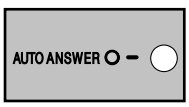

Note:
- Make sure feature #73 is set to **"TEL/FAX"** beforehand (page 62).

How phone calls and faxes are received
If the call is a phone call, the fax machine will ring.
If a fax calling tone is detected, the fax machine will receive the fax automatically without ringing.

Download from Www.Somanuals.com. All Manuals Search And Download.

5.8 Receiving a fax manually – Auto answer OFF

5.8.1 Activating TEL mode

1 Make sure feature #73 is set to "**TEL**" beforehand (page 62).

2 Press **【AUTO ANSWER】** repeatedly to display the following.

```
TEL MODE
```

- The **【AUTO ANSWER】** indicator on the base unit turns OFF.

Note:

- By default, the unit reduces the size of the received document to 92% when printing (See feature #36 on page 61 for details).

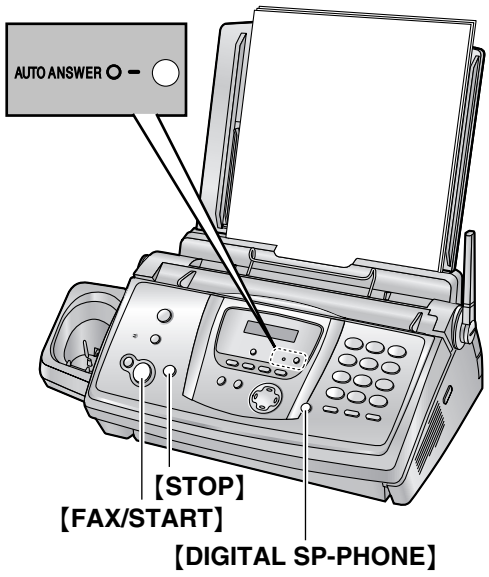

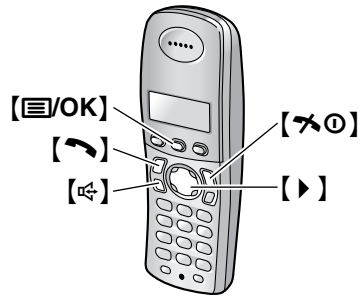

How to receive phone calls and faxes with the base unit

1. Press **【DIGITAL SP-PHONE】** to answer the call.
2. When:
   – document reception is required,
   – a fax calling tone (slow beep) is heard, or
   – no sound is heard,

   press **【FAX/START】**.

```
CONNECTING.....
```

   - The unit will start fax reception.

How to receive phone calls and faxes with the handset

1. Lift the handset and press **【】** or **【】** to answer the call.
2. When:
   – document reception is required,
   – a fax calling tone (slow beep) is heard, or
   – no sound is heard,

   press **【/OK】**.
3. Select "**Fax Start**", then press **【】**.
4. Press **【】** or place the handset on the base unit.

How to receive phone calls and faxes with an extension telephone

If you have another telephone connected to the same line (extension telephone), you can use the extension telephone to receive faxes.

1. When the extension telephone rings, lift the handset of the extension telephone.
2. When:
   – document reception is required,
   – a fax calling tone (slow beep) is heard, or
   – no sound is heard,

   press **【】【】【】【9】** (default fax activation code) **firmly**.
   - The fax machine will start fax reception.
3. Replace the handset.

Note:

- To receive fax documents using the extension telephone, make sure remote fax activation is turned ON beforehand (feature #41 on page 61). The default setting is ON.

To stop receiving

Press **【STOP】**.

Download from Www.Somanuals.com. All Manuals Search And Download.

5.8.2 Activating TEL/FAX mode

1 Make sure feature #73 is set to **"TEL/FAX"** beforehand (page 62).

2 Press **【AUTO ANSWER】** repeatedly to display the following.

```
TEL/FAX MODE
```

- The **【AUTO ANSWER】** indicator on the base unit turns OFF.

3 The ringer volume setting should be ON (page 22).

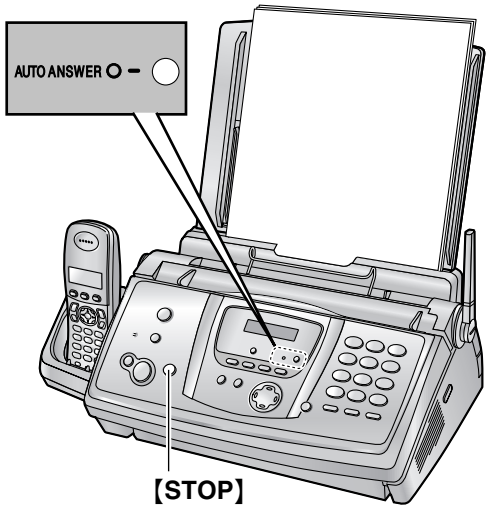

How phone calls and faxes are received

1. **"INCOMING CALL"** will be displayed but the unit will not ring.

2. The unit will wait for the duration of **2 rings** before answering the call.
- The number of rings is determined by the **"TEL/FAX delayed ring setting"** (feature #78 on page 62).
- During this time, an extension telephone (if connected to the same line) will ring.

3. The unit will answer the call and try to detect a fax calling tone.

When a fax calling tone is detected
The unit receives the fax automatically without ringing.

When a fax calling tone is not detected
❶ The unit will ring. You may answer the call.
- Callers will hear a ring back tone different from the one generated by the telephone company.
- An extension telephone (if connected to the same line) will not ring at this time.

❷ If you do not answer the call, the unit will activate the fax function.
- Some fax machines do not generate fax calling tones when sending faxes, therefore the unit will try to receive a fax even if no fax calling tone is detected.

Note:
- If you answer a call with the extension telephone, the fax machine may activate the fax function depending on the type of an extension telephone. Press **【STOP】** on the fax machine to talk with the calling party.
- By default, the unit reduces the size of the received document to 92% when printing (See feature #36 on page 61 for details).

Download from Www.Somanuals.com. All Manuals Search And Download.

5.9 Receiving a fax automatically – Auto answer ON

5.9.1 Activating TAM/FAX mode

1 Make sure feature #77 is set to **"TAM/FAX"** beforehand (page 62).

2 Press **【AUTO ANSWER】** repeatedly to display the following.

```
TAM/FAX MODE
```

- The **【AUTO ANSWER】** indicator on the base unit turns ON.
- The remaining time for recording incoming messages will be displayed.

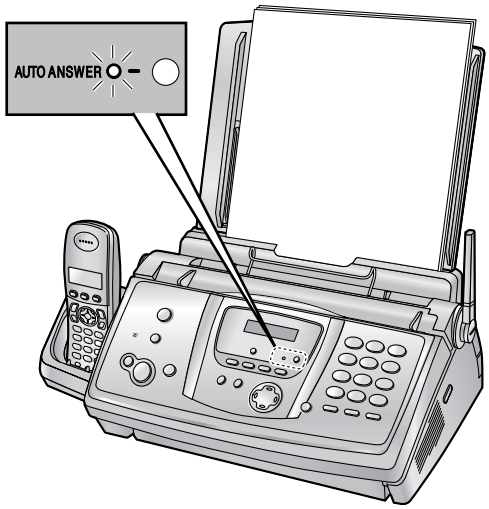

Note:

- The maximum recording time for incoming message can be changed (feature #10 on page 59).
- While an incoming call is being recorded, you can monitor it through the speaker. If this feature is not required, set feature #67 to OFF (page 62).
- If the unit displays the memory is full, erase unnecessary messages (page 54).

How phone calls and faxes are received

When receiving calls, the unit works as an answering machine and/or fax.

- If the call is a phone call, the unit will record the caller's message automatically.
- If a fax calling tone is detected, the unit will receive the fax automatically.

Note:

- By default, the unit reduces the size of the received document to 92% when printing (See feature #36 on page 61 for details).

Receiving a voice message and fax document in one call

The caller can leave a voice message and send a fax document during the same call. Inform the caller of the following procedure beforehand.

1. The caller calls your unit.
   - The answering machine will answer the call.
2. The caller can leave a message after the greeting message.
3. The caller presses **【✳】【9】**.
   - The unit will activate the fax function.
4. The caller presses the start button to send a fax.

Ring setting in TAM/FAX mode

You can change the number of rings before the unit answers calls. You can choose from **"2"** (default), **"3"**, **"4"**, **"TOLL SAVER"** and **"RINGER OFF"**. This setting can be changed by feature #06 on page 59.

"TOLL SAVER": The unit answers after 2 rings when new messages have been recorded, and after 4 rings when there are no new messages. If you call your unit from outside to listen to new messages (page 56), you will know that there are no new messages when the unit rings for the 3rd time. You can then hang up without being charged for the call.

Note:

- To turn the ringer OFF for the handset, see page 22.

Download from Www.Somanuals.com. All Manuals Search And Download.

5.9.2 Activating FAX ONLY mode

1 Make sure feature #77 is set to "**FAX ONLY**" beforehand (page 62).

2 Press **【AUTO ANSWER】** repeatedly to display the following.

```
FAX ONLY MODE
```

- The **【AUTO ANSWER】** indicator on the base unit turns ON.

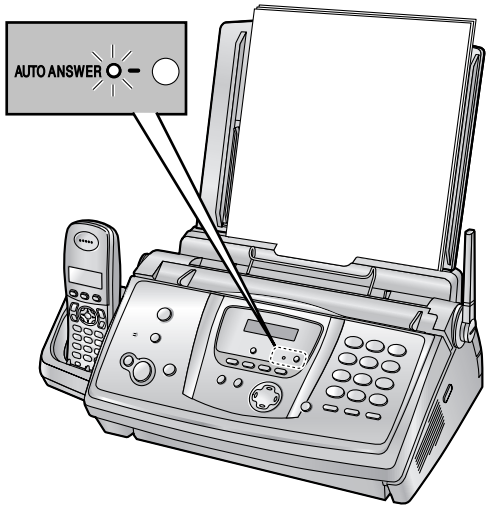

How faxes are received

When receiving calls, the unit will automatically answer all calls and only receive fax documents.

Note:

- The number of rings before a call is answered in FAX ONLY mode can be changed (feature #06 on page 59).
- By default, the unit reduces the size of the received document to 92% when printing (See feature #36 on page 61 for details).

5.10 Receive polling (retrieving a fax placed on another fax machine)

This feature allows you to retrieve a document from another compatible fax machine. Therefore you pay for the call.

Make sure that no documents are fed into your unit and that the other party's machine is ready for your call.

- Keep the front cover page open for button locations.

1 Press **【MENU】** repeatedly to display "**POLLING**".

2 Press **【SET】**.

3 Dial the fax number.

4 Press **【SET】**.

- The unit will start fax reception.

Download from Www.Somanuals.com. All Manuals Search And Download.

5.11 Junk fax prohibitor (preventing fax reception from undesired callers)

If you subscribe to Caller ID service, this feature prevents fax reception from calls that do not show caller information.
Additionally, the fax machine will not accept faxes originating from numbers that match a programmable junk fax prohibitor list.

- Keep the front cover page open for button locations.

Important:

- **This feature does not work when manual reception is performed.**

5.11.1 Activating the junk fax prohibitor

1. Press **[MENU]** repeatedly to display "**JUNK FAX PROH.**".
2. Press **[▶]**.
3. Press **[+]** or **[−]** repeatedly to select "**ON**".
4. Press **[SET]**.
5. Press **[MENU]**.
   - While the junk fax prohibitor is activated, "**JUNK FAX ON**" is displayed.

5.11.2 Storing undesired callers

You can register up to 10 undesired numbers from the Caller ID list (page 34) if you do not wish to receive faxes from them.

1. Press **[MENU]** repeatedly to display "**JUNK FAX PROH.**".
2. Press **[▶]** repeatedly to display "**JUNK LIST SET**".
3. Press **[SET]**.
4. Press **[+]** or **[−]** repeatedly to display the party you wish to prevent fax reception from.
5. Press **[SET]**.
   - To program other parties, repeat steps 4 to 5.
6. Press **[STOP]** to exit the program.

Note:

- If there is no space to store new items, "**LIST FULL**" is displayed in step 3 or step 5. Erase unnecessary items.

To display the junk fax prohibitor list

1. Press **[MENU]** repeatedly to display "**JUNK FAX PROH.**".
2. Press **[▶]** repeatedly to display "**JUNK LIST DISP.**".
3. Press **[SET]**.
4. Press **[+]** or **[−]** repeatedly to display the items on the list.
5. Press **[MENU]** to exit the program.

To print the junk fax prohibitor list

1. Press **[MENU]** repeatedly to display "**JUNK FAX PROH.**".
2. Press **[▶]** repeatedly to display "**JUNK LIST PRINT**".
3. Press **[SET]**.
4. Press **[MENU]** to exit the list.

To erase an item from the junk fax prohibitor list

1. Press **[MENU]** repeatedly to display "**JUNK FAX PROH.**".
2. Press **[▶]** repeatedly to display "**JUNK LIST DISP.**".
3. Press **[SET]**.
4. Press **[+]** or **[−]** repeatedly to display the desired item.
5. Press **[◀]**.
   - To cancel erasing, press **[STOP]**, then press **[MENU]**.
6. Press **[SET]**.
   - The item is erased.
   - To erase other items, repeat steps 4 to 6.
7. Press **[MENU]** to exit the list.

Download from Www.Somanuals.com. All Manuals Search And Download.

6.1 Using with the ring detection feature

When you subscribe to a duplex ring service, your telephone company will assign you a new fax number and will also tell you the assigned ring pattern. Please complete the following setup on your fax machine to identify the assigned ring pattern.

Important:

- **To use the ring detection feature, set to TEL mode (page 45).**

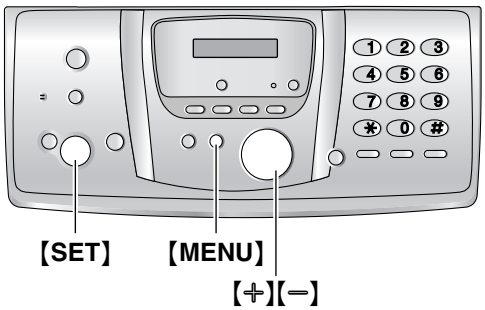

1 Press **【MENU】**.

2 Press **【#】**, then **【3】【1】**.

3 Press **【+】** or **【−】** to select "ON".

4 Press **【SET】**.

5 Press **【MENU】**.

Download from Www.Somanuals.com. All Manuals Search And Download.

7.1 Making a copy

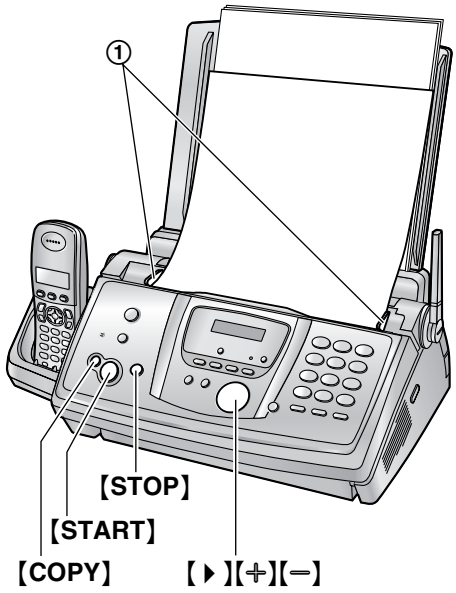

1 Adjust the width of the document guides (①) to fit the actual size of the document.

2 Insert the document (up to 10 pages) FACE DOWN until a single beep is heard and the unit grasps the document.
- If the document guides are not adjusted to fit the document, re-adjust them.

3 If necessary, press 【＋】 or 【－】 repeatedly to select the desired resolution.

4 Press 【COPY】.
- If necessary, enter the number of copies (up to 30).

5 Press 【START】, or wait for 15 seconds.
- The unit will start copying.

Note:
- Any document which can be sent as a fax can also be copied (page 40).

To select the resolution

Select the desired resolution according to the type of document.
– "FINE": For printed or typewritten documents with small print.
– "SUPER FINE": For documents with very small print.
– "PHOTO": For documents containing photographs, shaded drawings, etc.
- If you select "STANDARD", copying will be done using "FINE" mode.

Quick scan feature

This feature is helpful when you want to copy the document, then remove it for other uses. To use this feature, activate feature #34 (page 60) beforehand. The default setting is OFF.
- The document will be fed into the unit and scanned into memory. The unit will then print the data.
  If the document exceeds the memory capacity, copying of the exceeded document will be cancelled and this feature will be turned OFF automatically.
  However this feature will not turn OFF automatically when:
  – you enter the number of copies, and memory becomes full during copying.
  – memory becomes full during enlarge, reduce or collate copy.

To stop copying

Press 【STOP】.

7.1.1 More copying features

To enlarge a document

1. Insert the document, then press 【COPY】.
2. Press 【▶】.
3. Press 【＋】 repeatedly to select "150%" or "200%", then press 【START】.
   - The unit will only enlarge the centre of the upper part of the document. To make an enlarged copy of the bottom of the document, turn the document around, and then make a copy.

Example: 150% enlarged copy

Original document Enlarged copy

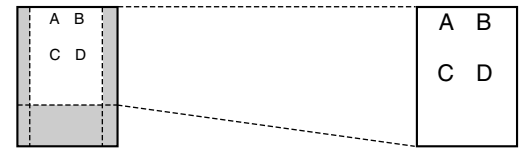

To reduce a document

1. Insert the document, then press 【COPY】.
2. Press 【▶】.
3. Press 【－】 repeatedly to select "92%", "86%" or "72%", then press 【START】.

Download from Www.Somanuals.com. All Manuals Search And Download.

Setting	Recording paper size	Original document size
"100%" (default)	A4	A4, Letter
"92%"	A4	A4
"86%"	A4	A4
"72%"	A4	Legal

A4 = 210 mm × 297 mm
Legal = 216 mm × 356 mm
Letter = 216 mm × 279 mm

Note:

- If the appropriate reduction rate is not selected, the document may be divided and the top of the second sheet will be deleted.
- If the image at the bottom of the document is not copied when you copy a document that is the same length as the recording paper, try 92% or 86%.

To collate multiple copies

The unit can collate multiple copies in the same order as the original document pages.

1. Insert the document, then press **[COPY]**.
2. Enter the number of copies (up to 30).
3. Press [▶] 2 times to display "COLLATE OFF".
4. Press [+] or [−] repeatedly to display "COLLATE ON".
5. Press **[START]**.

Example: Making 2 copies of a 4-page original document

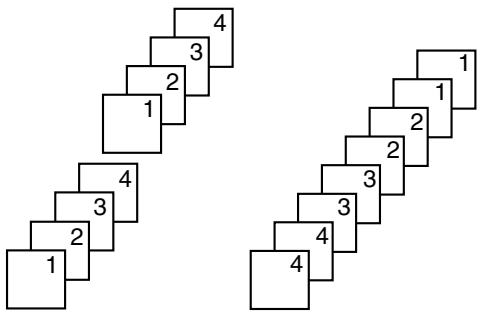

Collated pages Uncollated pages

Note:

- The unit will store the documents into memory while collating the copies. If memory becomes full while storing, the unit will only print out the stored pages.
- After copying, the collating feature will turn OFF automatically.
- If the unit has run out of recording paper, the unit will scan the document but will not print, and the data will not be stored in the memory. Insert more paper, press **[START]**, then try copying again.

Download from Www.Somanuals.com. All Manuals Search And Download.

8.1 Recording your greeting message

The unit has a pre-recorded greeting message for TAM/FAX mode. If you record your own greeting message, it will be played instead of the pre-recorded greeting message when a call is received.
You can record your own greeting message for a maximum of 16 (default) or 60 seconds in length. We recommend you record a message of less than 12 seconds to make it easier to receive faxes.
Make sure feature #77 is set to **"TAM/FAX"** beforehand (page 62).

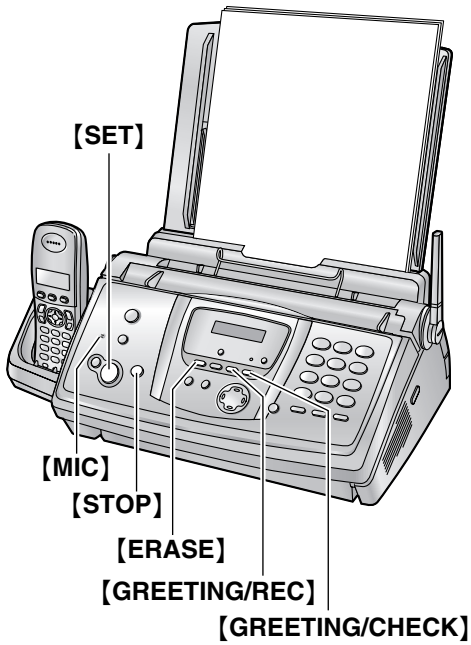

1 Press **【GREETING/REC】**.
- A long beep will sound.

2 Speak clearly about 20 cm away from **【MIC】**.
- The display will show the remaining recording time.

3 To stop recording, press **【STOP】**.
- The unit will repeat your message.

Note:
- You can change the maximum TAM/FAX greeting message recording time to 60 seconds (feature #54 on page 62).
  – If you change the setting to 60 seconds, we recommend that you tell the caller in your TAM/FAX greeting message to press **【✳】【9】** before starting fax transmission.
  – If you change the setting from 60 seconds to 16 seconds, your TAM/FAX greeting message will be deleted. The pre-recorded greeting message will be played when a call is received.

To check the greeting message

Press **【GREETING/CHECK】**.
- The unit will play the greeting message.

8.1.1 Erasing your recorded greeting message

1 Press **【ERASE】** 2 times.

2 Press **【SET】**.
- To cancel erasing, press **【STOP】**.

3 Press **【SET】**.

Note:
- If you erase your TAM/FAX greeting message, the pre-recorded greeting message will be played when a call is received.

Download from Www.Somanuals.com. All Manuals Search And Download.

8.2 Listening to recorded messages

When the unit has recorded new voice messages:

– The **【AUTO ANSWER】** indicator will flash when the auto answer setting is turned ON.
– The total number of recorded messages will flash on the base unit display.
Example:

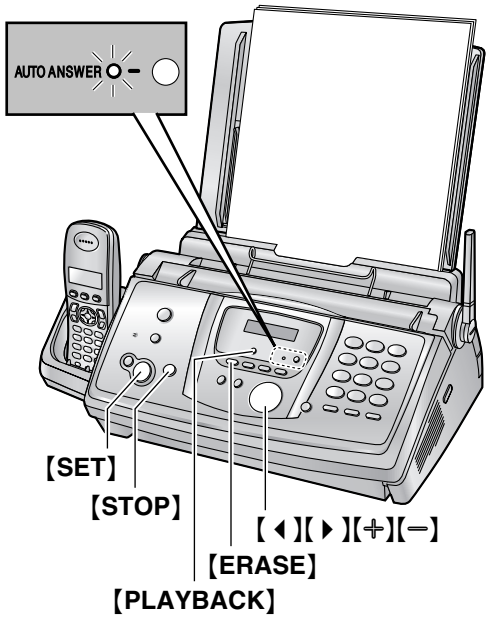

Press **【PLAYBACK】**.
- Only new messages will be played.
- Adjust the speaker volume using **【＋】** or **【－】**.
- After playing back all of the new messages;
  – the **【AUTO ANSWER】** indicator will stop flashing but will remain lit up when the auto answer setting is turned ON.
  – the total number of recorded messages will stop flashing and remain displayed.

If you press **【PLAYBACK】** at this time, all recorded messages will be played.

Note:
- The total recording time of all messages (greeting, incoming and memo) is **about 18 minutes**. If messages are recorded in noisy environment, the actual recording time may be less.

To repeat a message
Press **【◀】** while listening to the message.
- If you press **【◀】** within 5 seconds of the beginning of the message, the previous message will be played.
- To play back a specific message, press **【◀】** or **【▶】** and search for the message you want to listen to.

To skip a message
Press **【▶】** to play the next message.

To stop playback temporarily
Press **【STOP】**.
- If you press **【PLAYBACK】** within 1 minute, the unit will resume playing the rest of the messages.

Voice time/day stamp
During playback, the unit will announce the day of the week and time that each message was recorded.

8.2.1 Erasing recorded messages

To erase a specific message
Press **【ERASE】** while listening to the message you want to erase.

To erase all messages

1 Press **【ERASE】**.

2 Press **【SET】**.
- To cancel erasing, press **【STOP】**.

3 Press **【SET】** again.

8.3 Leaving a message for others or yourself

To leave a private message for yourself or someone else, you can record a voice memo. Recorded messages are treated as new messages. To listen to the recorded messages, see page 54.
- Keep the front cover page open for button locations.

1 Press **【MEMO】** to display **"MEMO MESSAGE"**.

2 Press **【SET】**.
- A long beep will sound.

3 Speak clearly about 20 cm away from **【MIC】**.

Download from Www.Somanuals.com. All Manuals Search And Download.

4 To stop recording, press **【MEMO】**.
- You can also stop recording by pressing **【STOP】**.

Download from Www.Somanuals.com. All Manuals Search And Download.

8.4 Operating from a remote location

You can call your unit from a remote location and access the answering machine.

Important:

- **Program the remote operation ID beforehand (feature #11 on page 59).**
- **Set the unit to TAM/FAX mode before going out (page 47).**
- **Use a touch tone telephone for remote operations.**

Helpful hints:

- When you press a key, press firmly.
- **Please make a copy of the following table, and carry it with you when you go out.**

Answering machine remote operation			
1. Call your unit. **2.** Enter the remote operation ID during or after the TAM/FAX greeting message. **3.** Enter a remote command within 10 seconds.		【5】	Plays all messages
		【7】	Records greeting message
		【9】	Stops recording of the greeting message
Key	**Remote command**	【✳】【4】	Erases a specific message
【1】	Repeats a message	【✳】【5】	Erases all messages
【2】	Skips a message	【0】	Skips the greeting message
【4】	Plays new messages	【8】【0】	Turns OFF auto answer setting

8.4.1 Summary of remote operation

1 Call your unit.

2 During the TAM/FAX greeting message, enter the remote operation ID.

3 **When there are new recorded messages**

1. A long beep will sound.

2. Short beep(s) will sound up to 8 times.
- This indicates the number of new messages.

3. New messages will be played back.

When there are no new messages

1. A long beep will sound (short beep will not sound).

2. Press 【5】.

3. All the recorded messages will be played back.

4 To end remote operation, hang up.

Note:

- When the voice memory is full, 6 beeps will sound after playing back the recorded messages. Erase any unnecessary messages.

8.4.2 Remote operation using remote commands

【1】 Repeat (During playback)
- The current message is repeated.
- If pressed within 5 seconds of playback, the previous message will be played.

【2】 Skip (During playback)
- The current message is skipped. The next message is played.

【4】 New message playback
- New messages are played back.

【5】 All message playback
- All messages are played back.

【7】 Record greeting message
- Speak after the long beep and press 【9】 to stop the operation.

【9】 Stop
- Recording of the greeting message is stopped.

【✳】【4】 Erase a specific message (During playback)
- The current message is erased and the next message will be played.

【✳】【5】 Erase all messages
- All recorded messages are erased.

Download from Www.Somanuals.com. All Manuals Search And Download.

【0】Skip greeting message

- The greeting message is skipped.

【8】【0】Turn OFF auto answer setting

- The receive mode will be changed from TAM/FAX mode to TEL mode or TEL/FAX mode depending on the setting of feature #73 (page 62).
- You cannot return to TAM/FAX mode in the same call.

To turn ON the auto answer setting

1. Call your unit and wait for 20 rings.
   - A beep will sound.
2. Enter the remote operation ID (feature #11 on page 59) within 8 seconds.
   - The unit will play the greeting message, and the auto answer setting will be turned ON. The receiving mode will be set to TAM/FAX or FAX ONLY mode, depending on the setting of feature #77 (page 62).
3. Hang up the handset.

Note:

- You cannot turn ON the auto answer setting when the unit is set to TEL/FAX mode.

Recording a marker message

After playing back the messages, you can leave an additional message.

1. Wait for 3 beeps indicating the end of the remote operation.
2. Hear 1 beep.
3. Wait about 10 seconds.
4. Hear the voice guide or hear 1 beep.
5. Leave a message.

Note:

- If you do not enter a remote command key within 10 seconds after the last operation, the unit will ask you to leave a marker message.

Download from Www.Somanuals.com. All Manuals Search And Download.

9.1 Base unit programming

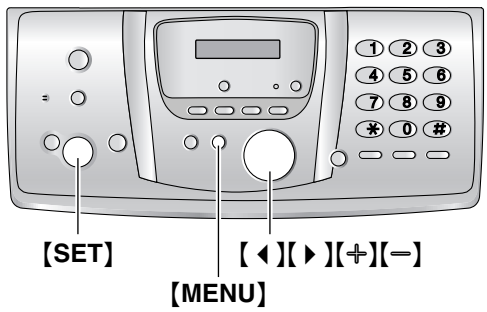

9.1.1 Programming basic features

1 Press 【MENU】.

2 Select the feature you wish to program. Press 【◀】 or 【▶】 repeatedly to display the desired feature.
- The current setting of the feature will be displayed.

3 Press 【+】 or 【−】 repeatedly to display the desired setting.
- This step may be slightly different depending on the feature.

4 Press 【SET】.
- The setting you selected is set, and the next feature will be displayed.

5 To exit programming, press 【MENU】.

9.1.2 Programming advanced features

1 Press 【MENU】.

2 Press 【◀】 or 【▶】 repeatedly to display "ADVANCE SETTINGS".

3 Press 【SET】.

4 Select the feature you wish to program. Press 【◀】 or 【▶】 repeatedly to display the desired feature.
- The current setting of the feature will be displayed.

5 Press 【+】 or 【−】 repeatedly to display the desired setting.
- This step may be slightly different depending on the feature.

6 Press 【SET】.
- The setting you selected is set, and the next feature will be displayed.

7 To exit programming, press 【MENU】 at any time.

To program by entering the program code number directly

You can select a feature by directly entering its program code (# and a 2-digit number) instead of using 【◀】 or 【▶】.

1. Press 【MENU】.
2. Press 【#】 and the 2-digit code (page 59 to page 62).
3. Press 【+】 or 【−】 repeatedly to display the desired setting.
   - This step may be slightly different depending on the feature.
4. Press 【SET】.
5. To exit programming, press 【MENU】.

To cancel programming

Press 【MENU】 to exit.

Download from Www.Somanuals.com. All Manuals Search And Download.

9.2 Basic features

Code #01: Setting the date and time

```
SET DATE & TIME
      PRESS SET
```

See page 24 for details.

Code #02: Setting your logo

```
YOUR LOGO
      PRESS SET
```

See page 25 for details.

Code #03: Setting your fax number

```
YOUR FAX NO.
      PRESS SET
```

See page 26 for details.

Code #04: Printing a sending report

```
SENDING REPORT
=ERROR        [±]
```

To print a sending report for fax transmission results (page 40).
"ERROR" (default): A sending report will be printed only when fax transmission fails.
"ON": A sending report will be printed after every transmission.
"OFF": Sending reports will not be printed.

Code #06: Changing the ring setting in FAX ONLY mode

```
FAX RING COUNT
RINGS=2       [±]
```

To change the number of rings before the unit answers a call in FAX ONLY mode.
You can select "2" (default), "3", "4", "5", "6", "7", "8" or "9".

Note:

- Set feature #77 to "FAX ONLY" (page 62) beforehand.

Code #06: Changing the ring setting in TAM/FAX mode

```
TAM RING COUNT
RINGS=2       [±]
```

To change the number of rings before the unit answers a call in TAM/FAX mode. You can select "2" (default), "3", "4", "TOLL SAVER" or "RINGER OFF". See page 47 for details.

Note:

- Set feature #77 to "TAM/FAX" (page 62) beforehand.

Code #10: Changing the maximum recording time for incoming messages

```
RECORDING TIME
=VOX          [±]
```

"VOX" (default): Unlimited.
"1 MIN"–"9 MIN": 1 minute to 9 minutes.

Code #11: Setting the remote operation ID

```
REMOTE TAM ID
=ON           [±]
```

1. Press 【MENU】.
2. Press 【⌗】, then 【1】【1】.
3. Press 【+】 or 【−】 repeatedly to select "ON".
4. Press 【SET】.
5. Enter any 3-digit number except a number using 0 or 7.
   - The default ID is "111".
6. Press 【SET】.
7. Press 【MENU】.

Code #13: Setting the dialling mode

```
DIALLING MODE
=TONE         [±]
```

See page 23 for details.

Code #17: Setting the ring tone for outside calls

```
EXT. RINGTONE
=A            [±]
```

To set the base unit ring tone from one of 3 tones for outside calls. You can select "A" (default), "B" or "C".

Note:

- To set the handset ring tone, see page 67.

Download from Www.Somanuals.com. All Manuals Search And Download.

9.3 Advanced features

Code #22: Setting the journal report to print automatically

```
AUTO JOURNAL
=ON              [±]
```

"ON" (default): The unit will print a journal report automatically after every 30 new fax transmissions and receptions (page 40).
"OFF": The unit will not print a journal report, but will keep a record of the last 30 fax transmissions and receptions.

Code #23: Sending documents overseas

```
OVERSEAS MODE
=ERROR           [±]
```

If you cannot send a fax overseas even if the number is correct and the line is connected, activate this feature before sending the fax. This feature improves the reliability by reducing the transmission speed.
"ERROR" (default): When the previous fax transmission fails and you wish to re-send the document.
"NEXT FAX": This setting is effective only for the next attempted fax transmission. After transmission, the unit will return to the previous setting.
"OFF": Deactivates this feature.

Note:

- This feature is not available for broadcast transmission.
- Calling charges may be higher than usual.

Code #25: Sending a fax at a specific time

```
DELAYED SEND
=OFF             [±]
```

This feature allows you to take advantage of low-cost calling hours offered by your telephone company. This feature can be set up to 24 hours in advance of the desired time.
To send a document:

1. Insert the document.
2. If necessary, press 【+】 or 【—】 repeatedly to select the desired resolution (page 39).
3. Press 【MENU】.
4. Press 【#】 then 【2】【5】.
5. Press 【+】 or 【—】 repeatedly to select "ON".
6. Press 【SET】.
7. Enter the fax number.
8. Press 【SET】.
9. Enter the transmission start time.
   - If you select 12-hour time entry when you set the date and time (page 24), press 【*】 repeatedly to select "AM" or "PM".
   - If you selected 24-hour time entry when you set the date and time (page 24), the time is set using 24-hour time entry.
10. Press 【SET】.
11. Press 【MENU】.

Note:

- To cancel after programming, press 【STOP】 then 【SET】.

Code #26: Setting the Caller ID list to print automatically

```
AUTO CALL. LIST
=OFF              [±]
```

"ON": The Caller ID list will be printed automatically each time the base unit logs 30 different callers (page 34).
"OFF" (default): The Caller ID list will not be printed, but the base unit will keep a record of the information for the last 30 different callers.

Code #31: Activating the Distinctive Ring feature

```
DISTINCTIVE RING
=OFF              [±]
```

See page 50 for details.

Code #34: Setting the quick scan

```
QUICK SCAN
=OFF              [±]
```

This feature is helpful when you want to remove the document for other uses, because the unit will release the document before sending or copying.
"ON": The unit will scan the document and store it into memory first, then the unit will start sending or copying.
"OFF" (default): Deactivates this feature.

Note:

- If the document exceeds the memory capacity, sending of the whole document or copying of the exceeded document will be cancelled and this feature will be turned OFF automatically.

However this feature will not turn OFF automatically when:

– you enter the number of copies, and memory becomes full during copying.

Download from Www.Somanuals.com. All Manuals Search And Download.

– memory becomes full during enlarge, reduce or collate copy.

Code #36: Receiving oversized documents

```
RCV REDUCTION
=92%          [±]
```

If the size of the document sent by the other party is as large as, or larger than the recording paper, the unit can reduce the document and print it. Select the desired reduction rate.

Setting	Recording paper size	Original document size
"100%"	A4	Letter
"92%" (default)	A4	A4
"86%"	A4	A4
"72%"	A4	Legal

Note:

- The information of the sending party is printed on the top of each page. Therefore, even if the original document is the same size as the recording paper, the document will be divided into 2 sheets when printed at "100%". Select "92%" to print on 1 sheet.

Code #39: Changing the display contrast

```
LCD CONTRAST
=NORMAL       [±]
```

"NORMAL" (default): For normal contrast.
"DARKER": Used when the display contrast is too light.

Code #41: Changing the fax activation code

```
FAX ACTIVATION
=ON           [±]
```

If you wish to use the extension telephone (page 45) to receive faxes, activate this feature and program the activation code.

1. Press **【MENU】**.
2. Press **【#】**, then **【4】【1】**.
3. Press **【+】** or **【−】** repeatedly to select "ON".
4. Press **【SET】**.
5. Enter your code (2 to 4 digits) using the dial keys **【0】**–**【9】**, **【*】** and **【#】**.
   - The default code is "***9".
   - Do not enter "0000".
6. Press **【SET】**.
7. Press **【MENU】**.

Code #42: Setting the message alert

```
MESSAGE ALERT
=OFF           [±]
```

To alert you when a new voice message is recorded. The unit beeps slowly until you listen to the recorded messages.
"ON": You will be alerted to new messages by a beeping sound.
"OFF" (default): Deactivates this feature.

Code #43: Setting the recording time alert

```
REC. TIME ALERT
=OFF           [±]
```

To alert you with beeps when there is less than 60 seconds of remaining recording time. The slow beeps will continue until you erase the recorded messages (page 54).
"ON": You will be alerted that you have reached the recording time limit by a beeping sound.
"OFF" (default): Deactivates this feature.

Code #44: Setting the memory reception alert

```
RECEIVE ALERT
=ON            [±]
```

To alert you with a beeping sound when a received fax document is stored into memory due to some existing problem.
The slow beeps will continue until you clear the printing problem and make sure the unit is supplied with enough paper to print the stored document.
"ON" (default): You will be alerted to a reception problem by a beeping sound.
"OFF": Deactivates this feature.

Code #46: Setting friendly reception

```
FRIENDLY RCV
=ON            [±]
```

To receive a fax automatically when you answer a call using the base unit and hear a fax calling tone (slow beep).
"ON" (default): You do not have to press **【FAX/START】** for fax reception.
"OFF": You have to press **【FAX/START】** for fax reception.

Code #47: Setting the voice guidance

```
VOICE GUIDANCE
=ON            [±]
```

If you wish to hear voice guidance, activate this feature.

Download from Www.Somanuals.com. All Manuals Search And Download.

"ON" (default): You will hear the friendly reception voice guide, pre-recorded messages and voice time/day stamp.
"OFF": Deactivates this feature.

Code #54: Changing the recording time for your TAM/FAX greeting message

```
GREETING TIME
=16s          [±]
```

"16s" (default): Maximum recording time is 16 seconds.
"60s": Maximum recording time is 60 seconds.
See page 53 for details.

Code #58: Setting the scan contrast

```
SCAN CONTRAST
=NORMAL       [±]
```

To send or copy a document with faint or dark writing, set this feature before transmission or copying.
"NORMAL" (default): Used for normal writing.
"LIGHT": Used for dark writing.
"DARKER": Used for faint writing.

Code #67: Setting the incoming message monitor

```
ICM MONITOR
=ON           [±]
```

To hear an incoming message (ICM) from the speaker when the answering device is recording the message.
"ON" (default): You can monitor the incoming message.
"OFF": Deactivates this feature.

Code #68: Setting the Error Correction Mode (ECM)

```
ECM SELECTION
=ON           [±]
```

This feature is available when the transmitting/receiving fax machines are ECM compatible.
"ON" (default): If there is an error during fax transmission/reception, the fax machine will support the communication.
"OFF": Deactivates this feature.

Note:

- You cannot change the setting when received documents are in memory.

Code #73: Changing the receiving mode in the manual answer setting

```
MANUAL ANSWER
=TEL           [±]
```

"TEL" (default): Telephone mode (page 45)
"TEL/FAX": Telephone/Fax mode (page 46)

Code #76: Setting the connecting tone

```
CONNECTING TONE
=ON            [±]
```

If you often have trouble when sending faxes, this feature allows you to hear connecting tones: fax tone, ring back tone and busy tone. You can use these tones to confirm the status of the other party's machine.
"ON" (default): You will hear connecting tones.
"OFF": Deactivates this feature.

Note:

- If the ring back tone continues, the other party's machine may not be a fax machine or may have run out of paper. Check with the other party.
- The connecting tone volume cannot be adjusted.

Code #77: Changing the receiving mode in the auto answer setting

```
AUTO ANSWER
=TAM/FAX       [±]
```

"TAM/FAX" (default): Telephone Answering Machine/Fax mode (page 47)
"FAX ONLY": Fax only mode (page 48)

Code #78: Changing the TEL/FAX delayed ring setting

```
TEL/FAX RING
RINGS=2        [±]
```

If you use an extension telephone in TEL/FAX mode, select the desired number of times the extension telephone rings before the unit answers the call. You can select **"1"**, **"2"** (default), **"3"**, **"4"**, **"5"**, **"6"**, **"7"** **"8"** or **"9"**. See page 46 for details.

Code #80: Resetting advanced features to their default settings

```
SET DEFAULT
RESET=NO       [±]
```

To reset the advanced features:

1. Press **[MENU]**.
2. Press **[#]**, then **[8][0]**.
3. Press **[+]** or **[−]** repeatedly to select **"YES"**.
4. Press **[SET]**.
5. Press **[SET]** again.
6. Press **[MENU]**.

Download from Www.Somanuals.com. All Manuals Search And Download.

Note:
- The ECM setting (feature #68 on page 62) will not be reset.

9.4 Direct commands for programming features

You can also select the desired setting by directly entering the program code (# and a 2-digit number) and direct command.
For more details on the features, see page 59 to page 62.

1 Press **【MENU】**.

2 Press **【#】** and the 2-digit code number.

3 Press the desired direct command to display the desired setting.
- This step may be slightly different depending on the feature.

4 Press **【SET】**.

5 To exit programming, press **【MENU】**.

9.4.1 Program code and direct command button

【#】【0】【1】 Date and time
- Enter the date and time using the dial keypad. See page 24 for details.

【#】【0】【2】 Your logo
- Enter your logo using the dial keypad. See page 25 for details.

【#】【0】【3】 Your fax number
- Enter your fax number using the dial keypad. See page 26 for details.

【#】【0】【4】 Sending report
- **【1】**: "ON"
- **【2】**: "OFF"
- **【3】**: "ERROR" (default)

【#】【0】【6】 FAX ring count
- **【2】**: "2" (default)
- **【3】**: "3"
- **【4】**: "4"
- **【5】**: "5"
- **【6】**: "6"
- **【7】**: "7"
- **【8】**: "8"
- **【9】**: "9"

【#】【0】【6】 TAM ring count
- **【2】**: "2" (default)
- **【3】**: "3"
- **【4】**: "4"
- **【5】**: "TOLL SAVER"

Download from Www.Somanuals.com. All Manuals Search And Download.

– 【6】: “RINGER OFF”

【#】【1】【0】 Message recording time
– 【0】: “VOX” (default)
– 【1】: “1 MIN”
– 【2】: “2 MIN”
– 【3】: “3 MIN”
– 【4】: “4 MIN”
– 【5】: “5 MIN”
– 【6】: “6 MIN”
– 【7】: “7 MIN”
– 【8】: “8 MIN”
– 【9】: “9 MIN”

【#】【1】【1】 Remote operation ID
– 【1】: “ON” (default)
– 【2】: “OFF”

- If you select “ON”, enter a 3-digit number except a number using 0 or 7.

【#】【1】【3】 Dialling mode
– 【1】: “PULSE”
– 【2】: “TONE” (default)

【#】【1】【7】 External ring tone
– 【1】: “A” (default)
– 【2】: “B”
– 【3】: “C”

【#】【2】【2】 Automatic journal report
– 【1】: “ON” (default)
– 【2】: “OFF”

【#】【2】【3】 Overseas mode
– 【1】: “NEXT FAX”
– 【2】: “OFF”
– 【3】: “ERROR” (default)

【#】【2】【5】 Delayed transmission
– 【1】: “ON”
– 【2】: “OFF” (default)

- If you select “ON”, next enter the fax number and transmission time using the dial keypad (see feature #25 on page 60 for details).

【#】【2】【6】 Automatic Caller ID list
– 【1】: “ON”
– 【2】: “OFF” (default)

【#】【3】【1】 Distinctive ring
– 【1】: “ON”
– 【2】: “OFF” (default)

【#】【3】【4】 Quick scan
– 【1】: “ON”
– 【2】: “OFF” (default)

【#】【3】【6】 Receiving reduction
– 【1】: “72%”
– 【2】: “86%”
– 【3】: “92%” (default)
– 【4】: “100%”

【#】【3】【9】 Display contrast
– 【1】: “NORMAL” (default)
– 【2】: “DARKER”

【#】【4】【1】 Fax activation code
– 【1】: “ON” (default)
– 【2】: “OFF”

- If you select “ON”, next enter your 2 to 4 digit code using 【0】–【9】, 【✳】 and 【#】.

【#】【4】【2】 Message alert
– 【1】: “ON”
– 【2】: “OFF” (default)

【#】【4】【3】 Recording time alert
– 【1】: “ON”
– 【2】: “OFF” (default)

【#】【4】【4】 Memory reception alert
– 【1】: “ON” (default)
– 【2】: “OFF”

【#】【4】【6】 Friendly reception
– 【1】: “ON” (default)
– 【2】: “OFF”

【#】【4】【7】 Voice guidance
– 【1】: “ON” (default)
– 【2】: “OFF”

【#】【5】【4】 Greeting recording time
– 【1】: “16s” (default)
– 【2】: “60s”

【#】【5】【8】 Scan contrast
– 【1】: “NORMAL” (default)
– 【2】: “LIGHT”
– 【3】: “DARKER”

【#】【6】【7】 Incoming message monitor
– 【1】: “ON” (default)
– 【2】: “OFF”

【#】【6】【8】 ECM selection
– 【1】: “ON” (default)
– 【2】: “OFF”

【#】【7】【3】 Manual receive mode
– 【1】: “TEL” (default)
– 【2】: “TEL/FAX”

Download from Www.Somanuals.com. All Manuals Search And Download.

【#】【7】【6】 Connecting tone
– **【1】**: "**ON**" (default)
– **【2】**: "**OFF**"

【#】【7】【7】 Auto answer
– **【1】**: "**FAX ONLY**"
– **【2】**: "**TAM/FAX**" (default)

【#】【7】【8】 TEL/FAX ring setting
– **【1】**: "**1**"
– **【2】**: "**2**" (default)
– **【3】**: "**3**"
– **【4】**: "**4**"
– **【5】**: "**5**"
– **【6】**: "**6**"
– **【7】**: "**7**"
– **【8】**: "**8**"
– **【9】**: "**9**"

【#】【8】【0】 Set default
– **【1】**: "**YES**"
– **【2】**: "**NO**" (default)

- If you select "**YES**", press **【SET】** 2 times, then press **【MENU】** to exit programming.

Download from Www.Somanuals.com. All Manuals Search And Download.

9.5 Handset programming

- When customising, the current item or setting is indicated by ▸.

Menu	Sub-menu	Sub-menu 2	Default setting	Page
"Time Settings"	"Set Date & Time"		----------	page 23
	"Alarm"		"Off"	page 67
"Ringer Setup"	"Ringer Volume"		Maximum	page 22
	"Ext. Ringtone"		"Ringtone 1"	page 67
	"Int. Ringtone"		"Ringtone 1"	page 67
	"Night Mode"	"Start/End"	23:00/06:00	page 68
		"On/Off"	"Off"	page 67
		"Ring Delay"	"60 sec."	page 68
		"Select Category"	----------	page 68
"Display Setup"	"Standby Display"		"Off"	page 68
	"Select Language"		"English"	page 68
	"Contrast"		Level 3	page 69
"Call Options"	"Call Bar"		----------	page 69
	"Auto Talk"		"Off"	page 69
"Registration"	"Register H.set"		----------	page 73
"Select Base"	----------		"Auto"	page 73
"Other Options"	"Handset PIN"		"0000"	page 69
	"Keytones"		"On"	page 69
	"Reset Handset"		----------	page 69

Using the base unit PIN

Menu	Sub-menu	Sub-menu2	Default setting	Page
"Call Options"	"Dial Mode"		"Tone"	page 23
	"Recall"		"400 msec."	page 70
	"Pause Length"		"3 sec."	page 70
	"Emergency No."		"999"	page 71
	"Call Restrict"		----------	page 71
"Other Options"	"Base Unit PIN"		"0000"	page 71
	"Repeater Mode"		"Off"	page 74
	"Reset Base"		----------	page 71

Note:

- Up to 3 menu items can be displayed at a time. To select a menu item not shown on the current page, scroll up or down by pressing the navigator key, 【▲】 or 【▼】, respectively.

Download from Www.Somanuals.com. All Manuals Search And Download.

9.5.1 Programmable functions

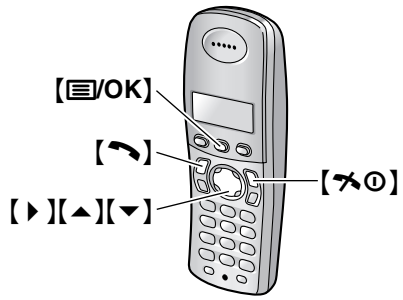

Helpful hints:

- To exit programming, press 【】 at any time.

9.5.2 Alarm

Setting alarm

An alarm will sound for 3 minutes at the set time once or daily.
Set the date and time beforehand (page 23).

1. Press 【/OK】.
2. Select "**Handset Setup**", then press 【】.
3. Select "**Time Settings**", then press 【】.
4. Select "**Alarm**", then press 【】 2 times.
5. Select an alarm mode, then press 【】.
   - "**Once**": The alarm will sound once at the set time. Enter the desired day and month by selecting 2 digits for each.
   - "**Daily**": An alarm will sound daily at the set time.
   - "**Off**" (default): Turns the alarm OFF. Press 【】 again, then press 【】 to finish.
6. Enter the desired hour and minute by selecting 2 digits for each.
   - You can select "**AM**", "**PM**" or 24-hour time entry by pressing 【】 repeatedly.
7. Press 【/OK】.
8. Select the ring tone that will sound at the set time, then press 【】.
9. Select "**Save**", then press 【】.
10. Press 【】.

Note:

- To stop the alarm, press any dial key.
- When the handset is in talk or intercom mode, the alarm will not sound until the call has ended.
- Alarm volume depends on handset ringer volume (page 22).
- The alarm will sound at the set time even when the ringer is turned OFF.
- If you select "**Once**", the setting will be changed to "**Off**" after the alarm sounds.

9.5.3 Ringer options

Changing ring tones

You can choose the ring tone used by the handset.
"**Ext. Ringtone**": Selects the ring tone for outside calls.
"**Int. Ringtone**": Selects the ring tone for intercom calls.

1. Press 【/OK】.
2. Select "**Handset Setup**", then press 【】.
3. Select "**Ringer Setup**", then press 【】.
4. Select the desired item, then press 【】.
5. Select the desired ring tone, then press 【】.
6. Press 【】.

Note:

- If you select one of the melody ring tones, the ring tone will continue to sound for several seconds if the caller hangs up before you answer. You may hear a dial tone or no one on the line when you answer a call.
- The preset melodies in this product are used with permission of © 2004 M-ZoNE Co., Ltd.
- To set the base unit ring tone, see feature #17 on page 59.

9.5.4 Night mode

Night mode allows you to select a block of time during which the handset will not ring for outside calls. This feature is useful for times when you do not want to be disturbed, for example, while sleeping.
Using the handset phonebook's category feature (page 30), you can also select categories of callers whose calls will override night mode and ring the handset (Caller ID users only).
Set the date and time beforehand (page 23).

Note:

- The base unit will ring regardless of this setting.

Setting night mode ON/OFF

1. Press 【/OK】.
2. Select "**Handset Setup**", then press 【】.
3. Select "**Ringer Setup**", then press 【】.
4. Select "**Night Mode**", then press 【】.
5. Select "**On/Off**", then press 【】.

Download from Www.Somanuals.com. All Manuals Search And Download.

6. Select "On" or "Off" (default), then press 【▶】.
7. Press 【✂⏻】.

Note:
- When the night mode is turned ON, "[N]" is displayed.
- Set the receiving mode to TEL mode.

Setting the start and end time for night mode

1. Press 【▤/OK】.
2. Select "Handset Setup", then press 【▶】.
3. Select "Ringer Setup", then press 【▶】.
4. Select "Night Mode", then press 【▶】.
5. Select "Start/End", then press 【▶】.
6. Enter the desired hour and minute you wish to start this feature by selecting 2 digits for each.
   - If you use 12-hour time entry, select "AM" or "PM" by pressing 【✱】 repeatedly before entering the time.
7. Enter the desired hour and minute you wish to end this feature by selecting 2 digits for each.
   - If you use 12-hour time entry, select "AM" or "PM" by pressing 【✱】 repeatedly before entering the time.
8. Press 【▤/OK】.
9. Press 【✂⏻】.

Setting the ring delay for night mode

This setting allows the handset to ring during night mode if the caller waits long enough. After the selected delay time has passed, the handset will ring. If you select "No Ringing", the handset will not ring during night mode.

1. Press 【▤/OK】.
2. Select "Handset Setup", then press 【▶】.
3. Select "Ringer Setup", then press 【▶】.
4. Select "Night Mode", then press 【▶】.
5. Select "Ring Delay", then press 【▶】.
6. Select "30 sec." or "60 sec.", then press 【▶】.
7. Press 【✂⏻】.

Note:
- Delayed ring will not sound if this feature is set either to "90 sec." or "120 sec.". This is because the base unit detects an incoming call prior to handset.

Selecting categories to bypass night mode

1. Press 【▤/OK】.
2. Select "Handset Setup", then press 【▶】.
3. Select "Ringer Setup", then press 【▶】.
4. Select "Night Mode", then press 【▶】.
5. Select "Select Category", then press 【▶】.
6. Press the desired category numbers, then press 【▤/OK】.
   - The selected category number will flash.
   - To cancel a selected category number, press the number again. The number will stop flashing.
7. Press 【✂⏻】.

9.5.5 Display setup

Selecting the standby mode display

"Base Number": The current base unit number is displayed.
"Handset Number": The current handset number is displayed.
"Off" (default): Only the current date and time are displayed.

1. Press 【▤/OK】.
2. Select "Handset Setup", then press 【▶】.
3. Select "Display Setup", then press 【▶】.
4. Select "Standby Display", then press 【▶】.
5. Select the desired setting, then press 【▶】.
6. Press 【✂⏻】.

Note:
- If "Base Number" is selected and the current base unit number is 2, "-2-" is displayed.
- If "Handset Number" is selected and the current handset number is 2, "[2]" is displayed.

Changing the display language

1. Press 【▤/OK】.
2. Select "Handset Setup", then press 【▶】.
3. Select "Display Setup", then press 【▶】.
4. Select "Select Language", then press 【▶】.
5. Select the desired language, then press 【▶】.
6. Press 【✂⏻】.

Note:
- If you select a language you cannot read, press 【✂⏻】, 【▤/OK】, press 【▲】 2 times,

Download from Www.Somanuals.com. All Manuals Search And Download.

press [▶], press [▼] 2 times, press [▶], press [▼], press [▶], select the desired language, then press [▶]. Press [OFF].

Changing the display contrast

1. Press [MENU/OK].
2. Select "Handset Setup", then press [▶].
3. Select "Display Setup", then press [▶].
4. Select "Contrast", then press [▶].
5. Press [▲] or [▼] repeatedly to select the desired contrast, then press [▶].
6. Press [OFF].

9.5.6 Call options

Setting call bar

This feature prohibits making outside calls with the handset. When call bar is turned ON, only intercom calls and emergency calls can be made. To store emergency numbers, see page 71.

1. Press [MENU/OK].
2. Select "Handset Setup", then press [▶].
3. Select "Call Options", then press [▶].
4. Select "Call Bar", then press [▶].
5. Enter "0000" (default handset PIN).
   - If you changed the PIN, enter it (page 69).
6. Select "On" or "Off" (default), then press [▶].
7. Press [OFF].

Note:

- When call bar is turned on, is displayed.

Setting auto talk

When this feature is turned ON, you can answer calls simply by lifting the handset off the base unit. You do not need to press [TALK].

1. Press [MENU/OK].
2. Select "Handset Setup", then press [▶].
3. Select "Call Options", then press [▶].
4. Select "Auto Talk", then press [▶].
5. Select "On" or "Off" (default), then press [▶].
6. Press [OFF].

9.5.7 Other options

Changing the handset PIN (personal identification number)

For security, the handset PIN must be entered when changing certain settings. The default PIN is "0000".

Important:

- **If you change the PIN, please make note of your new PIN. The unit will not reveal the PIN to you. If you forget your PIN, consult your nearest Panasonic service centre.**

1. Press [MENU/OK].
2. Select "Handset Setup", then press [▶].
3. Select "Other Options", then press [▶].
4. Select "Handset PIN", then press [▶].
5. Enter the current 4-digit handset PIN.
6. Enter the new 4-digit handset PIN, then press [MENU/OK].
7. Press [OFF].

Setting key tone

You can select whether or not key tones are heard when keys are pressed. Includes confirmation tones and error tones.

1. Press [MENU/OK].
2. Select "Handset Setup", then press [▶].
3. Select "Other Options", then press [▶].
4. Select "Keytones", then press [▶].
5. Select "On" (default) or "Off", then press [▶].
6. Press [OFF].

Note:

- If key tones are turned OFF, error tones will not sound when you enter the wrong PIN or when memory is full.

Resetting the handset to its default settings

1. Press [MENU/OK].
2. Select "Handset Setup", then press [▶].
3. Select "Other Options", then press [▶].
4. Select "Reset Handset", then press [▶].
5. Enter "0000" (default handset PIN).
   - If you changed the PIN, enter it (page 69).
6. Select "Yes", then press [▶].
7. Press [OFF].

Download from Www.Somanuals.com. All Manuals Search And Download.

Note:
- The following items will be deleted or reset to their default settings:
  - Settings listed on page 66 (not including items using the base unit PIN)
  - Redial list
  - Voice enhancer
  - Category names
  - Category ring tones
- The following items will be retained:
  - Handset phonebook items (category names and ring tones will be reset to their default settings.)
  - Date and time

9.5.8 Programmable functions using the base unit PIN

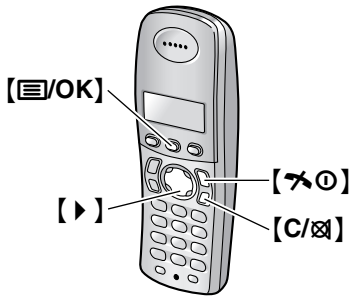

Helpful hints:
- To exit programming, press 【】 at any time.

9.5.9 Call Options

Changing the flash time

Change the flash time of the handset, if necessary, depending on the requirements of your service provider or PBX.

1. Press 【/OK】.
2. Select "**Base Unit Setup**", then press 【】.
3. Enter "**0000**" (default base unit PIN).
   - If you changed the PIN, enter it (page 71).
4. Select "**Call Options**", then press 【】.
5. Select "**Recall**", then press 【】.
6. Select the desired setting, then press 【】.
7. Press 【】.

Setting pause length

Change the pause length of the handset, if necessary, depending on the requirements of your service provider or PBX.

1. Press 【/OK】.
2. Select "**Base Unit Setup**", then press 【】.
3. Enter "**0000**" (default base unit PIN).
   - If you changed the PIN, enter it (page 71).
4. Select "**Call Options**", then press 【】.
5. Select "**Pause Length**", then press 【】.
6. Select the desired setting, then press 【】.
7. Press 【】.

Download from Www.Somanuals.com. All Manuals Search And Download.

Storing/changing emergency numbers

These settings determine which telephone numbers can be dialled while the call bar feature is ON (page 69).

1. Press **【☰/OK】**.
2. Select "**Base Unit Setup**", then press **【▶】**.
3. Enter "**0000**" (default base unit PIN).
   - If you changed the PIN, enter it (page 71).
4. Select "**Call Options**", then press **【▶】**.
5. Select "**Emergency No.**", then press **【▶】**.
6. Select a memory location, then press **【▶】**.
   - If the memory location already contains an emergency number, the number is displayed.
7. Enter/edit the number, then press **【☰/OK】**.
   - To erase an emergency number, press and hold **【C/⊠】**.
8. Press **【↩⏻】**.

Setting call restriction

You can restrict selected handsets from dialling certain numbers. You can assign up to 6 phone numbers to be restricted, and select which handsets will be restricted. Storing area codes here will prevent the restricted handsets from dialling any phone number in that area code. If a restricted number is dialled, the call will not be connected and the restricted number will flash on the display.

1. Press **【☰/OK】**.
2. Select "**Base Unit Setup**", then press **【▶】**.
3. Enter "**0000**" (default base unit PIN).
   - If you changed the PIN, enter it (page 71).
4. Select "**Call Options**", then press **【▶】**.
5. Select "**Call Restrict**", then press **【▶】**.
6. Set which handsets will be restricted by pressing the desired handset number.
   - All the registered handset numbers will be displayed.
   - Flashing numbers indicate call restriction is turned ON for the corresponding handset.
   - To turn call restriction OFF for a handset, press the number again. The number will stop flashing.
7. Press **【☰/OK】**.
8. Select a memory location, then press **【▶】**.
   - If the memory location already contains a restricted number, the number is displayed.
9. Enter the phone number or area code to be restricted (up to 8 digits), then press **【☰/OK】**.
   - To erase a restricted number, press **【C/⊠】**.
10. Press **【↩⏻】**.

9.5.10 Other options

Changing the base unit PIN (personal identification number)

For security, the base unit PIN must be entered when changing certain settings. The default PIN is "**0000**".

Important:

- **If you change the PIN, please make note of your new PIN. The unit will not reveal the PIN to you. If you forget your PIN, consult your nearest Panasonic service centre.**

1. Press **【☰/OK】**.
2. Select "**Base Unit Setup**", then press **【▶】**.
3. Enter "**0000**" (default base unit PIN).
   - If you changed the PIN, enter it (page 71).
4. Select "**Other Options**", then press **【▶】**.
5. Select "**Base Unit PIN**", then press **【▶】**.
6. Enter the new 4-digit base unit PIN, then press **【☰/OK】**.
7. Press **【↩⏻】**.

Resetting handset programming that uses the base unit PIN

Handset programming that uses the base unit PIN will be reset (page 66).

1. Press **【☰/OK】**.
2. Select "**Base Unit Setup**", then press **【▶】**.
3. Enter "**0000**" (default base unit PIN).
   - If you changed the PIN, enter it (page 71).
4. Select "**Other Options**", then press **【▶】**.
5. Select "**Reset Base**", then press **【▶】**.
6. Select "**Yes**", then press **【▶】**.
7. Press **【↩⏻】**.

Note:

- The following items will also be deleted or reset to their default settings:
  – Caller ID list for the handset (page 35)

Download from Www.Somanuals.com. All Manuals Search And Download.

- The repeater mode will be retained (page 74).

Download from Www.Somanuals.com. All Manuals Search And Download.

10.1 Operating additional units

10.1.1 Additional handsets

Up to 6 handsets can be registered to a single base unit. Additional handsets, for example, will allow you to have an intercom call with another handset while a third handset is on an outside call. See page 9 for accessory information.

10.1.2 Additional base units

Handsets can be registered to up to 4 base units, allowing you to add additional base units and extend the area in which your handset(s) can be used. If a handset moves out of range of its base unit when "**Auto**" is selected on base unit selection (page 73), it will look for another base unit to make or receive calls. Each base unit forms 1 radio cell.

Note:

- Calls will be disconnected when the handset moves from one radio cell to another.
- Intercom calls and call transfers are only possible between handsets in the same radio cell.

10.2 Registering a handset to a base unit

The included handset and base unit are preregistered. After purchasing an additional handset, register it to the base unit. Ensure that the additional handset is switched ON. If it is not ON, press and hold 【✆⏻】 for few seconds to turn the handset ON.

- Keep the front cover page open for button locations.

10.2.1 Easy registration

1 Lift the additional handset and press 【✆⏻】 to put the handset in standby mode.

2 Press and hold 【LOCATOR】 on the base unit for about 3 seconds, until the registration tone sounds.

3 Place the additional handset on the base unit. The registration tone continues to sound. With the handset still on the base unit, wait until a confirmation tone sounds and Ⓨ stops flashing.

Note:

- If an error tone sounds, or if Ⓨ is still flashing, register the handset manually.
- If all registered handsets start ringing in step 2, press 【LOCATOR】 to stop. Start again from step 1.
- Charge the batteries of your additional handset for about 7 hours before initial use.
- This registration method cannot be used for handsets that have already been registered to a base unit. Register the handset manually.

10.2.2 Manual registration

1 Press 【▤/OK】.

2 Select "**Handset Setup**", then press 【▶】.

3 Select "**Registration**", then press 【▶】 2 times.

4 Press and hold 【LOCATOR】 on the base unit for about 3 seconds, until the registration tone sounds.
- If all registered handsets start ringing, press 【LOCATOR】 to stop, then repeat this step.
- After pressing 【LOCATOR】, the rest of this procedure must be completed within 1 minute.

5 Select a base unit number, then press 【▶】.
- This number is used by the handset as a reference only.

6 Wait until "**Enter Base PIN**" is displayed, then enter "**0000**" (default base unit PIN), then press 【▤/OK】.
- If you changed the PIN, enter it (page 71).
- When the handset has been registered successfully, Ⓨ will stop flashing. If key tones are turned ON (page 69), a confirmation tone will be heard.

10.2.3 Selecting a base unit

When "**Auto**" is selected, the handset will automatically use any available base unit it is registered to. When a specific base unit is selected, the handset will make and receive calls using that base unit only. If the handset is out of range of that base unit, no calls can be made or received.

1 Press 【▤/OK】.

2 Select "**Handset Setup**", then press 【▶】.

3 Select "**Select Base**", then press 【▶】.

Download from Www.Somanuals.com. All Manuals Search And Download.

4 Select the desired base unit number, or "**Auto**", then press **[▶]**.
- The handset starts searching for the base unit.

10.2.4 Cancelling a handset

A handset can cancel its own registration (or the registration of another handset) that is stored in the base unit. This will allow the base unit to forget the handset.

1 Press **[☰/OK]**.

2 Select "**Base Unit Setup**", then press **[▶]**.

3 Enter "**0000**" (default base unit PIN).
- If you changed the PIN, enter it (page 71).

4 Enter "**335**".

5 Select "**Cancel Handset**", then press **[▶]**.
- The numbers of all handsets registered to the base unit are displayed.

6 Select the handset(s) you want to cancel, by pressing the desired handset number.
- The selected handset number(s) will flash.
- To cancel a selected handset number, press the number again. The number will stop flashing.

7 Press **[☰/OK]**.

8 Select "**Yes**", then press **[▶]**.

10.2.5 Cancelling a base unit

A handset can cancel a base unit that it is registered to. This allows the handset to forget the base unit.

1 Press **[☰/OK]**.

2 Select "**Handset Setup**", then press **[▶]**.

3 Select "**Registration**", then press **[▶]**.

4 Enter "**335**".

5 Select "**Cancel Base**", then press **[▶]**.

6 Enter "**0000**" (default handset PIN).
- If you changed the PIN, enter it (page 69).

7 Select the base unit(s) you want to cancel, by pressing the desired base unit number.
- The selected base unit number(s) will flash.
- To cancel a selected base unit number, press the number again. The number will stop flashing.

8 Press **[☰/OK]**.

9 Select "**Yes**", then press **[▶]**.

10 Press **[✂⏻]**.

Note:
- To register the handset to another base unit or to the same base unit again, see manual registration on page 73.

10.2.6 Increasing the range of the base unit

You can increase the range of the base unit by using a DECT repeater. Please use only Panasonic DECT repeater. See page 9 for accessory information.

Important:
- **Before registering the repeater to this base unit, you must turn the repeater mode ON.**

Setting the repeater mode

1. Press **[☰/OK]**.
2. Select "**Base Unit Setup**", then press **[▶]**.
3. Enter "**0000**" (default base unit PIN).
   - If you changed the PIN, enter it (page 71).
4. Select "**Other Options**", then press **[▶]**.
5. Select "**Repeater Mode**", then press **[▶]**.
6. Select "**On**" or "**Off**" (default), then press **[▶]**.
7. Press **[✂⏻]**.

Note:
- After turning repeater mode ON/OFF, you will not be able to make or receive calls for a few moments.

10.3 Handset locator

Using this feature, you can locate the handset if it has been misplaced.
- Keep the front cover page open for button locations.

1 Press **[LOCATOR]**.
- The base unit will page the handset for about 1 minute.

2 To stop paging, press **[LOCATOR]** on the base unit or **[✂⏻]** on the handset.

Note:
- This feature is not available while using **[DIGITAL SP-PHONE]**.

Download from Www.Somanuals.com. All Manuals Search And Download.

10.4 Intercom between handsets

Intercom calls can be made between handsets in the same radio cell, but not in different radio cells.

- Keep the front cover page open for button locations.

Example: When handset 1 calls handset 2

1. **Handset 1:**
   Press **【INT】** and **【2】** (desired handset number).
   - The handset 2 will ring.
2. **Handset 2:**
   Press **【】** or **【】** to answer.
3. When finished talking, press **【】**.

10.5 Transferring calls between handsets / Conference calls

Outside calls can be transferred between 2 handsets.
2 people can have a conference call with an outside party.

- Keep the front cover page open for button locations.

Example: When handset 1 transfers a call to handset 2

1. **Handset 1:**
   During an outside call, press **【INT】** and **【2】** (desired handset number).
   - The outside call will be put on hold.
   - If there is no answer, press **【INT】** or **【】** to return to the outside call.
2. **Handset 2:**
   Press **【INT】**, **【】** or **【】** to answer.
   - Handset 2 can talk with handset 1.
3. **Handset 1:**
   To complete the call transfer, press **【】**.
   To establish a conference call, press **【3】**.

To transfer a call without speaking to the handset 2 user

After step 1, press **【】** on the handset 1.

- flashes to indicate the outside call is on hold.
- Handset 2 rings if it is within range of the base unit and turned ON.
- If the transferred call is not answered within 60 seconds, the handset 1 will ring again. Press **【INT】** or **【】** to return to the outside call.

Download from Www.Somanuals.com. All Manuals Search And Download.

10.6 Copying handset phonebook items

Phonebook items (page 29) can be copied from the handset to the phonebook of another handset.

- Keep the front cover page open for button locations.

Copying a stored item

1. Find the desired item (page 30), then press 【(≡)/OK】.
2. Select "**Copy**", then press 【▶】.
3. Enter the handset number you wish to send the item to.
4. To continue copying another item, select "**Yes**", then press 【▶】. Find the desired item, then press 【▶】.
   - To finish copying, select "**No**", then press 【▶】.
5. Press 【⏻】.

Copying all stored items

1. Press 【📖】, then press 【(≡)/OK】.
2. Select "**Copy All**", then press 【▶】.
3. Enter the handset number you wish to send the items to.
   - When all items have been copied, "**Completed**" is displayed.
4. Press 【⏻】.

Note:

- If the other handset (the receiver) is not in standby mode, "**Failed**" is displayed on your handset (the sender).
- If copying failed after copying at least 1 item, "**Incomplete**" is displayed on your handset (the sender).

Download from Www.Somanuals.com. All Manuals Search And Download.

11.1 Available character entries for the handset

The handset dial keys are used to enter characters and numbers. Each dial key has multiple characters assigned to it. The available character entry modes are, Alphabet, Numeric, Greek, Extended 1, Extended 2, and Cyrillic. When in Alphabet (ABC), Greek (ΑΒΓ), Extended 1 (AÄÅ), Extended 2 (SŚŠ), or Cyrillic (АБВ) character entry modes, you can select which character is entered by pressing a dial key repeatedly.

- When the handset displays the character entry screen:
  - Press 【◀】 or 【▶】 to move the cursor.
  - Press dial keys to enter characters and numbers.
  - Press **【C/⊠】** to erase the character or number highlighted by the cursor. Press and hold **【C/⊠】** to erase all characters or numbers.
  - Press 【✳】 to switch between uppercase and lowercase.
  - To enter another character located on the same dial key, press 【▶】 to move the cursor to the next space, then press the appropriate dial key.

11.1.1 Character entry modes

Several character entry modes are available. When the handset displays the character entry screen, press 【📖】, then select a character entry mode, and press 【▶】. The default mode is Alphabet.

Alphabet character table (ABC)

0	1	ABC 2	DEF 3	GHI 4	JKL 5	MNO 6	PQRS 7	TUV 8	WXYZ 9
Space 0	Space # & ' ( ) ✳ , - . / 1	A B C 2	D E F 3	G H I 4	J K L 5	M N O 6	P Q R S 7	T U V 8	W X Y Z 9
		a b c 2	d e f 3	g h i 4	j k l 5	m n o 6	p q r s 7	t u v 8	w x y z 9

Numeric entry table (0-9)

0	1	ABC 2	DEF 3	GHI 4	JKL 5	MNO 6	PQRS 7	TUV 8	WXYZ 9
0	1	2	3	4	5	6	7	8	9

Greek character table (ΑΒΓ)

0	1	ABC 2	DEF 3	GHI 4	JKL 5	MNO 6	PQRS 7	TUV 8	WXYZ 9
Space 0	Space # & ' ( ) ✳ , - . / 1	A B Γ 2	Δ E Z 3	H Θ I 4	K Λ M 5	N Ξ O 6	Π P Σ 7	T Y Φ 8	X Ψ Ω ϒ 9

Extended 1 character table (AÄÅ)

0	1	ABC 2	DEF 3	GHI 4	JKL 5	MNO 6	PQRS 7	TUV 8	WXYZ 9
Space 0	Space # & ' ( ) ✳ , - . / 1	A À Á Â Ã Ä Å Æ B C Ç 2	D E È É Ê Ë Ẽ F 3	G Ğ H I Ì Í Î Ï Ĭ İ Ǐ 4	J K L 5	M N Ñ O Ò Ó Ô Õ Ö ø 6	P Q R S Ş ß 7	T U Ù Ú Û Ü Ũ V 8	W Ŵ X Y ŷ Z 9
		a à á â ã ä å æ b c ç 2	d e è é ê ë ẽ f 3	g ğ h i ì í î ï ĩ ı ǐ 4	j k l 5	m n ñ o ò ó ô õ ö ø 6	p q r s ş ß 7	t u ù ú û ü ũ v 8	w ŵ x y ŷ z 9

Download from Www.Somanuals.com. All Manuals Search And Download.

- The following are used for both uppercase and lowercase:

  ø Ş Ŵ ŷ

Extended 2 character table (SŚŠ)

0	1	ABC 2	DEF 3	GHI 4	JKL 5	MNO 6	PQRS 7	TUV 8	WXYZ 9
Space 0	Space # & ' ( ) ∗ , - . / 1	A Á Ä Ą B C Ć Č 2	D Ď E É Ę Ě F 3	G H I Í 4	J K L Ł Ĺ Ľ 5	M N Ń Ň O Ó Ö Ő 6	P Q R Ŕ Ř S Ś Š 7	T Ť U Ú Ü Ű ů V 8	W X Y ỳ Ý Z Ź Ż Ž 9
		a á ä ą b c ć č 2	d ď e é ę ě f 3	g h i í 4	j k l ł ĺ ľ 5	m n ń ň o ó ö ő 6	p q r ŕ ř s ś š 7	t ť u ú ü ű ů v 8	w x y ỳ ý z ź ż ž 9

- The following are used for both uppercase and lowercase:

  Ą Ć Č Ę Ł Ĺ Ľ Ń Ŕ Ś Š ů ỳ Ź Ż Ž

Cyrillic character table (АБВ)

0	1	ABC 2	DEF 3	GHI 4	JKL 5	MNO 6	PQRS 7	TUV 8	WXYZ 9
Space 0 Ґ Є І Ї Ў	Space # & ' ( ) ∗ , - . / 1	А Б В Г 2	Д Е Ж З 3	И Й К Л 4	М Н О П 5	Р С Т У 6	Ф Х Ц Ч 7	Ш Щ Ъ Ы 8	Ь Э Ю Я 9

Download from Www.Somanuals.com. All Manuals Search And Download.

12.1 Error messages – Reports

If a problem occurs during fax transmission or reception, one of the following messages will be printed on the sending and journal reports (page 40).

Message	Code	Cause & Solution
COMMUNICATION ERROR	40-42 46-72 FF	• A transmission or reception error occurred. Try again or check with the other party.
	43 44	• A line problem occurred. Connect the telephone line cord to a different jack and try again. • An overseas transmission error occurred. Try using the overseas mode (feature #23 on page 60).
DOCUMENT JAMMED	-----	• The document is jammed. Remove the jammed document (page 91).
ERROR-NOT YOUR UNIT	54 59 70	• A transmission or reception error occurred because of a problem with the other party's fax machine. Check with the other party.
JUNK FAX PROH. REJECT	-----	• The fax was rejected by the junk fax prohibitor feature (page 49).
MEMORY FULL	-----	• The memory is full of received documents due to a lack of recording paper, a lack of ink film or a recording paper jam. Install paper (page 17), install ink film (page 14) or clear the jammed paper (page 88).
NO DOCUMENT	-----	• The document was not fed into the unit properly. Re-insert it and try again.
OTHER FAX NOT RESPONDING	-----	• The other party's fax machine is busy or has run out of recording paper. Try again. • The other party's fax machine rings too many times. Send the fax manually (page 39). • The other party's machine is not a fax machine. Check with the other party. • The number you dialled is not in service.
PRESSED THE STOP KEY	-----	• **【STOP】** was pressed, and fax transmission or reception was cancelled.
OK	-----	• Fax transmission or reception was successful.

Download from Www.Somanuals.com. All Manuals Search And Download.

12.2 Error messages – Base unit display

If the unit detects a problem, one or more of the following messages will appear on the display.

Display	Cause and Solution
"CALL SERVICE"	• There is something wrong with the unit. Contact our service personnel.
"CHECK DOCUMENT"	• The document was not fed into the unit properly. Re-insert the document. If misfeeding occurs frequently, clean the document feeder rollers (page 92) and try again. • Attempted to send a document longer than 600 mm. Press 【STOP】 to remove the document. Divide the document into two or more sheets and try again.
"CHECK FILM"	• The ink film is empty. Replace the ink film with a new one (page 16). • The ink film is not installed. Install it (page 14). • The ink film is slack or creased. Tighten it (see step 5 on page 15).
"CHECK MEMORY"	• Memory (telephone numbers, parameters, etc.) has been erased. Re-program.
"CHECK PAPER"	• Recording paper is not installed or the unit has run out of paper. Install paper and press 【START】 to clear the message. • The recording paper was not fed into the unit properly (page 90). Reinstall paper (page 17) and press 【START】 to clear the message. • The recording paper has jammed near the recording paper entrance. Clear the jammed paper (page 88) and press 【START】 to clear the message.
"COVER OPEN"	• The back cover is open. Close it.
"FAX IN MEMORY"	• The unit has a document in memory. See the other displayed message instructions to print out the document. For fax memory capacity, see page 96.
"FAX MEMORY FULL"	• The memory is full of received documents due to a lack of recording paper, a lack of ink film or a recording paper jam. Install paper (page 17), install ink film (page 14) or clear the jammed paper (page 88). • When performing memory transmission, the document being stored exceeded the memory capacity of the unit. Send the entire document manually.
"FILM EMPTY"	• The ink film is empty. Replace the ink film with a new one (page 16). • The ink film is slack. Tighten it (see step 5 on page 15) and install again. • The fax machine is positioned near appliances such as TVs or speakers which generate an intense magnetic field.
"FILM NEAR EMPTY"	• The remaining ink film is low. Prepare a new ink film (page 9).
"MEMORY FULL"	• When making a copy, the document being stored exceeded the memory capacity of the unit. Press 【STOP】 to clear the message. Divide the document into sections.

Download from Www.Somanuals.com. All Manuals Search And Download.

Display	Cause and Solution
“MESSAGE FULL”	● There is no memory available to record voice messages. Erase unnecessary messages (page 54).
“MODEM ERROR”	● There is something wrong with the unit’s modem. Contact our service personnel.
“NO FAX REPLY”	● The other party’s fax machine is busy or has run out of recording paper. Try again.
“OPEN CABINET CHECK FILM SLACK” “OPEN CABINET CHECK FILM TYPE”	● Please use genuine Panasonic replacement film (page 9). ● The ink film is slack. Tighten it (see step 5 on page 15). ● The fax machine is positioned near appliances such as TVs or speakers which generate an intense magnetic field.
“PAPER JAMMED”	● A recording paper jam occurred. Clear the jammed paper (page 88).
“PLEASE WAIT”	● The unit is checking that there is no slack or crease on the ink film. Wait for a moment while the check is completed.
“PHONEBOOK FULL”	● There is no space to store new items in the base unit phonebook. Erase unnecessary items (page 32).
“POLLING ERROR”	● The other party’s fax machine does not support polling. Check with the other party.
“REDIAL TIME OUT”	● The other party’s fax machine is busy or has run out of recording paper. Try again.
“REMOVE DOCUMENT”	● The document is jammed. Remove the jammed document (page 91). ● Press **【STOP】** to eject the jammed document.
“TRANSMIT ERROR”	● A transmission error occurred. Try again.
“UNIT OVERHEATED”	● The unit is too hot. Stop using the unit for a while and let the unit cool down.

Download from Www.Somanuals.com. All Manuals Search And Download.

12.3 When a function does not work, check here

If you still have difficulties after following the instructions in this section, reset the unit. Disconnect the power cord and turn OFF the handset. Reconnect the power cord and turn ON the handset.

12.3.1 Initial settings

Problem	Cause & Solution
I cannot hear a dial tone.	• If you use a splitter to connect the unit, remove the splitter and connect the unit to the wall jack directly. If the unit operates properly, check the splitter. • Disconnect the unit from the telephone line and connect a known working telephone. If the working telephone operates properly, contact our service personnel to have the unit repaired. If the working telephone does not operate properly, contact your telephone company. • The power cord or telephone line cord is not connected. Check the connections. • If you connected the fax machine through a computer modem, connect the fax machine directly to a telephone line jack.
I cannot make calls.	• The dialling mode setting may be wrong. Change the setting (page 23).
The unit does not ring.	• The ringer volume is turned OFF. Adjust it (page 22).

12.3.2 General

Problem	Cause & Solution
The unit displays "CHECK PAPER" even though paper is inserted.	• The paper is inserted halfway. Insert it correctly (page 17) and press **【START】** to clear the message.
The other party complains they only hear a fax tone and cannot talk.	• FAX ONLY mode is set. Tell the other party the number is only used for faxes. • Change the receiving mode to TAM/FAX mode (page 47), TEL mode (page 45) or TEL/FAX mode (page 46).
The 【REDIAL】/【PAUSE】 button does not function properly.	• If this button is pressed during dialling, a pause will be inserted. If pressed immediately after a dial tone is obtained, the last number dialled will be redialled.
The receiving mode does not function properly.	• The Distinctive Ring is set (feature #31 on page 50).
During programming, I cannot enter the code or ID number.	• All or part of the numbers are the same as another code or ID. Change the number: – remote operation ID: feature #11 on page 59. – fax activation code: feature #41 on page 61.
The ink film runs out quickly.	• The help printing function, copy function, and reports also use ink film. • Even if there are only a few sentences, every page that comes out of the machine is considered a full page. • Turn OFF the following features: – sending report: feature #04 on page 59. – journal report: feature #22 on page 60. – Caller ID list: feature #26 on page 60.

Download from Www.Somanuals.com. All Manuals Search And Download.

Problem	Cause & Solution
The base unit beeps.	● Recording paper/ink film has run out. Press 【**STOP**】 to stop the beeps and install paper/ink film.
The speakerphone is not working.	● Use the speakerphone in a quiet room. ● If you have difficulty hearing the other party, adjust the volume.
I cannot locate a handset.	● The called handset is too far from the base unit. ● The called handset is in use. Try again later.
Caller information is not displayed.	● You have not subscribed to Caller ID service. ● The caller requested not to send his/her information. ● Depending on the service of the local telephone company, caller information may not be displayed on the handset in TEL/FAX mode. In this case, change the TEL/FAX ring setting to 1 (feature #78 on page 62).
While viewing caller information, the display returns to standby mode.	● Do not pause for over 1 minute on the handset or 3 minutes on the base unit while searching.

12.3.3 Handset

Problem	Cause & Solution
The handset does not work.	● Make sure that the batteries are installed correctly (page 18). ● Fully charge the batteries (page 20). ● Clean the charge contacts and charge again (page 20). ● Turn the handset power OFF, then ON (page 21). ● Check that the power cord is connected properly. ● The handset has not been registered to the base unit. Register the handset (page 73). ● Re-install the batteries (page 18) and fully charge them.
The handset display is blank.	● The handset is not turned ON. Turn the power ON (page 21).
The handset will not turn ON.	● Make sure that the batteries are installed correctly (page 18). ● Fully charge the batteries (page 20). ● Clean the charge contacts and charge again (page 20).
Y is flashing.	● The handset is not registered to the base unit. Register it (page 73). ● The handset is too far from the base unit. Move closer. ● The power cord is not connected. Check the connections. ● You are using the handset or base unit in an area with high electrical interference. Locate the handset and base unit away from interference sources, such as antenna and mobile phones.
The handset does not ring.	● The night mode feature is turned ON. Turn it OFF (page 67). ● The ringer volume is turned OFF. Adjust it (page 22).
The batteries should be charging but the battery icon does not change.	● Clean the charge contacts and charge again (page 20). ● The power cord is disconnected. Plug in the power cord.
A busy tone is heard when [ ] is pressed.	● The handset is too far from the base unit. Move closer and try again. ● The base unit or another handset is on an outside call. Wait for the other user to complete the call.

Download from Www.Somanuals.com. All Manuals Search And Download.

Problem	Cause & Solution
Static, sound cuts in/out, fades. Interference from other electrical units.	• Move the handset and the base unit away from other electrical appliances. • Move closer to the base unit.
Noise is heard during a call.	• You are using the handset or base unit in an area with high electrical interference. Locate the handset and base unit away from interference sources, such as antenna and mobile phones.
The handset stops working while being used.	• Disconnect the power cord and turn OFF the handset to reset the unit. Connect the power cord, turn ON the handset and try again.
While storing an item in the phonebook or assigning a one touch dial, the handset starts to ring.	• To answer a call, press 【 】 or 【 】. Storing will be cancelled. Store the name and number again.
I assigned a phonebook item to a desired category, but category ring tones will not sound.	• You must subscribe to Caller ID service.
I cannot redial by pressing 【 】.	• If the redialled number was more than 24 digits long, the number will not be redialled. Redial the number manually.
flashes or the handset beeps intermittently while it is in use.	• Fully charge the batteries (page 20).
I fully charged the batteries, but still flashes.	• Clean the charge contacts and charge again (page 20). • It is time to replace the batteries (page 18).
I cannot receive documents using the handset.	• The memory is full of received documents due to a lack of recording paper or a recording paper jam. Install paper (page 17) or clear the jammed paper (page 88).
I cannot make a call with the handset.	• The call bar feature is set. Turn it OFF (page 69). • You dialled a call restricted number. Remove the number from the call restricted list (page 71). • The key lock feature is turned ON. Turn it OFF (page 28).
I cannot register a handset to a base unit.	• The maximum number of base units are already registered to the handset. Cancel unused base unit registrations from the handset (page 74). • The maximum number of handsets are already registered to the base unit. Cancel unused handset registrations from the base unit (page 74). • You entered the wrong PIN. If you forget your PIN, consult your nearest Panasonic service centre. • Locate the handset and the base unit away from other electrical appliances.

Download from Www.Somanuals.com. All Manuals Search And Download.

12.3.4 Fax – sending

Problem	Cause & Solution
I cannot send documents.	• The other party's fax machine is busy or has run out of recording paper. Try again. • The other party does not have a fax machine. Check with the other party. • The other party's fax machine failed to answer the fax automatically. Send the fax manually (page 39). • The memory is full of received documents and the quick scan (feature #34 on page 60) is ON. Turn this feature OFF, and send the fax again.
I cannot send a fax overseas.	• Use the overseas transmission mode of feature #23 (page 60). • Add two pauses at the end of the telephone number or dial manually.
The other party complains that letters on their received document are distorted or not clear.	• If your line has special telephone services such as call waiting, the service may have been activated during fax transmission. Connect the unit to a line that does not have these services. • Another telephone on the same line is off the hook. Hang up the telephone and try again. • Try copying the document. If the copied image is clear, there may be something wrong with the other party's machine. • Adjust the scan contrast using feature #58 (page 62).
The other party complains that black lines, white lines or smudges appear on their received document.	• The scanner glass, white plate or rollers are dirty with correction fluid, etc. Clean them (page 92). Please do not insert a document before correction fluid has dried completely.

12.3.5 Fax – receiving

Problem	Cause & Solution
I cannot receive documents.	• The ink film is empty. Replace the ink film with a new one (page 16).
I cannot receive documents automatically.	• The receiving mode is set to TEL mode. Change the receiving mode to TAM/FAX mode (page 47), FAX ONLY mode (page 48) or TEL/FAX mode (page 46). • The time taken to answer the call is too long. Decrease the number of rings before the unit answers a call (feature #06 on page 59 and #78 on page 62). • The greeting message is too long. Record a shorter message (page 53).
The display shows "CONNECTING.....", but faxes are not received.	• The receiving mode is set to FAX ONLY mode and the incoming call is not a fax. Change the receiving mode to TEL mode (page 45), TAM/FAX mode (page 47) or TEL/FAX mode (page 46).
A blank sheet is ejected.	• If a blank sheet is ejected after the received document is printed out, the size of the document sent by the other party is as large as, or larger than, the recording paper, or the receiving reduction rate is not programmed correctly. Program the proper rate in feature #36 (page 61). • The other party placed the document in their fax machine the wrong way. Check with the other party.

Download from Www.Somanuals.com. All Manuals Search And Download.

Problem	Cause & Solution
The printing quality is poor.	Please do not reuse the ink film! Please use genuine Panasonic replacement film. Refer to page 9 for further details. ● The thermal head is dirty. Clean it (page 93). ● Some paper has instructions recommending which side to print on. Try turning the paper over. ● You may have used paper with a cotton and/or fibre content that is over 20%, such as letterhead or resume paper. ● If documents can be copied properly, the unit is working normally. The other party may have sent a faint document or there may be something wrong with the other party's machine. Ask them to send a clearer copy of the document or to check their fax machine.
The other party complains that they cannot send a document.	● The receiving mode is set to TEL mode. Receive the document manually (page 44) or change the receiving mode to TAM/FAX mode (page 47) or FAX ONLY mode (page 48). ● The memory is full of received documents due to a lack of recording paper, a lack of ink film or a recording paper jam. Install paper (page 17) or clear the jammed paper (page 88).
I cannot select the desired receiving mode.	● If you want to set TAM/FAX or FAX ONLY mode, set the desired mode using feature #77 (page 62), and press **【AUTO ANSWER】** repeatedly to select the desired mode. ● If you want to set TEL or TEL/FAX mode, set the desired mode using feature #73 (page 62), and press **【AUTO ANSWER】** repeatedly to select the desired mode.
I cannot receive documents using the handset.	● The memory is full of received documents due to a lack of recording paper, a lack of ink film or a recording paper jam. Install paper (page 17) or clear the jammed paper (page 88).
When an extension telephone is connected, I cannot receive documents by pressing 【✳】【✳】【✳】【9】.	● You must set remote fax activation to ON (feature #41 on page 61) beforehand. ● Press **【✳】【✳】【✳】【9】** firmly. ● The memory is full of received documents due to a lack of recording paper, a lack of ink film or a recording paper jam. Install paper (page 17) or clear the jammed paper (page 88).

12.3.6 Copying

Problem	Cause & Solution
The unit will not make a copy.	● The ink film is empty. Replace the ink film with a new one (page 16). ● You cannot make a copy during programming. ● You cannot make a copy during a telephone conversation.
A black line, a white line or smudge appears on the copied document.	● The scanner glass, white plate or rollers are dirty with correction fluid, etc. Clean them (page 92). Please do not insert a document before correction fluid has dried completely.
The copied image is distorted.	● Adjust the width of the document guides to fit the actual size of the document.

Download from Www.Somanuals.com. All Manuals Search And Download.

Problem	Cause & Solution
The printing quality is poor.	Please do not reuse the ink film! Please use genuine Panasonic replacement film. Refer to page 9 for further details. Original Copy ● Some paper has instructions recommending which side to print on. Try turning the paper over. ● You may have used paper with a cotton and/or fibre content that is over 20%, such as letterhead or resume paper. ● The thermal head is dirty. Clean it (page 93).

12.3.7 Answering machine

Problem	Cause & Solution
The answering machine is turned ON, but caller messages are not recorded.	● The message memory is full. Erase unnecessary messages (page 54).
I cannot retrieve recorded messages from a remote location.	● Activate the remote operation feature by setting the remote operation ID beforehand (feature #11 on page 59). ● Press the remote operation ID correctly and firmly (page 56). ● The unit is not in TAM/FAX mode. Change to TAM/FAX mode (page 47). ● You are using a pulse telephone. Try again using a touch tone phone.
The other party complains that they cannot leave a voice message.	● The memory is full. Erase unnecessary messages (page 54).
While recording a greeting message or listening to messages, the unit rings and recording stops.	● A call is being received. Answer the call and try again later.

12.3.8 If a power failure occurs

- The unit will not function.
- The unit is not designed for making emergency telephone calls when the power fails. Alternative arrangements should be made for access to emergency services.
- Fax transmission and reception will be interrupted.
- If delayed transmission (feature #25 on page 60) is programmed and power failure prevents the document from being sent at the set time, the document will be sent after power is restored.
- If any fax documents are stored in the memory, they will be lost. When power is restored, a power down report will be printed stating which documents in memory have been erased.

Download from Www.Somanuals.com. All Manuals Search And Download.

12.4 Recording paper jams

12.4.1 When the recording paper has jammed in the unit

The base unit display will show the following.

```
PAPER JAMMED
```

1 Open the front cover by pulling up the centre part.

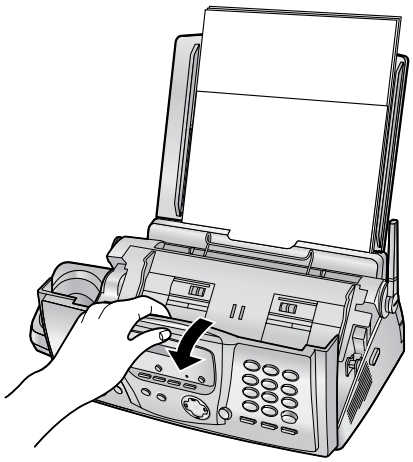

2 Release the back cover by pushing the green button (①).

- You can also release the back cover by pushing in the green lever (②).

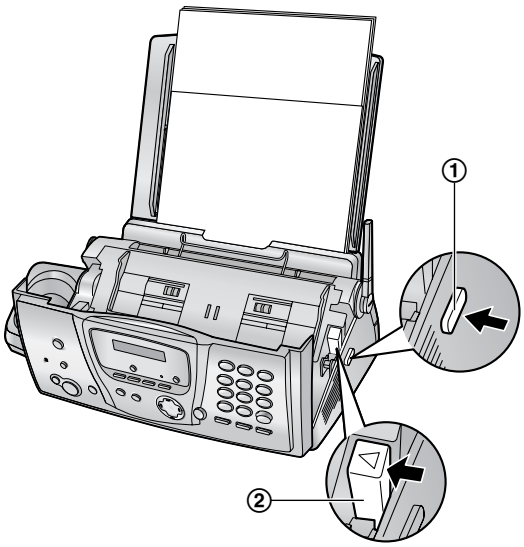

3 Open the back cover.

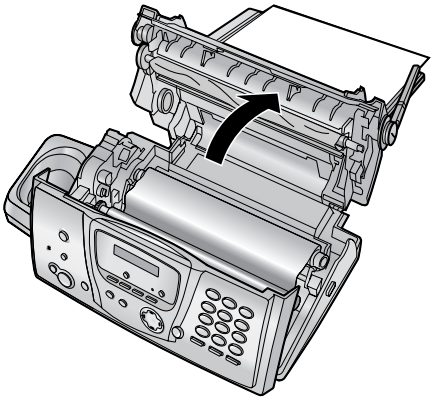

4 Remove the jammed recording paper (①).

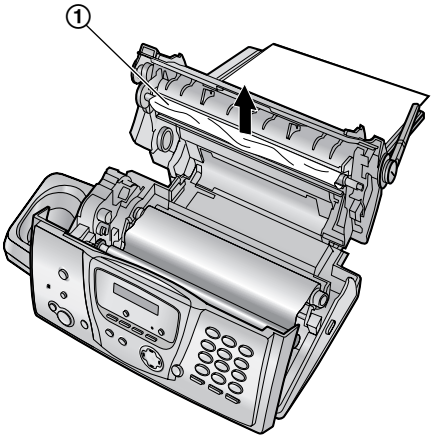

Download from Www.Somanuals.com. All Manuals Search And Download.

5 Turn the gear of the blue core (①) in the direction of the arrow until the ink film is tight (②).

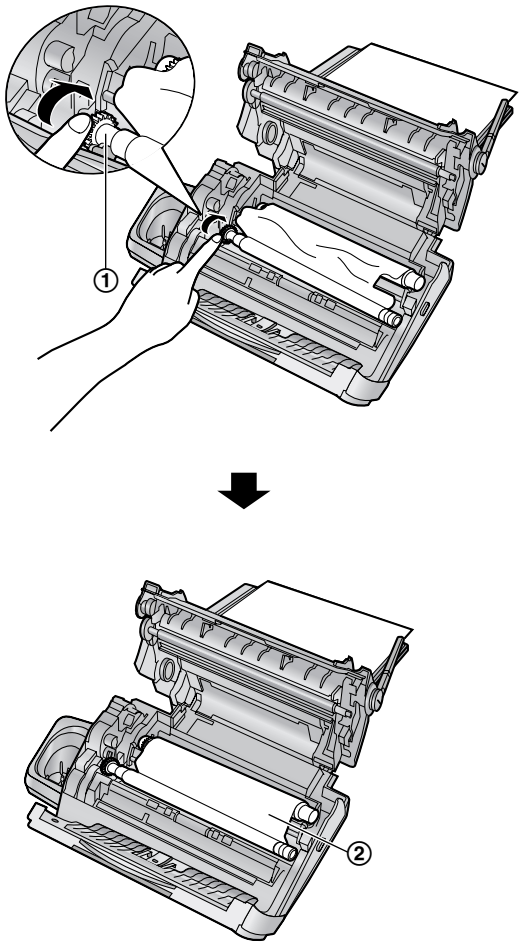

Correct

- The ink film is wrapped around the blue core (③) at least once.

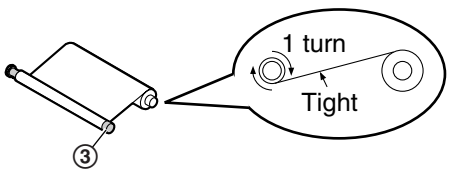

Incorrect

- The ink film is not wrapped around the blue core (④).

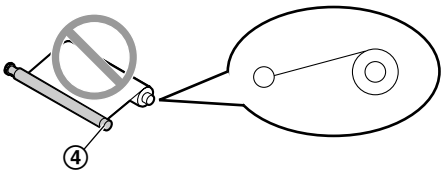

- The ink film is reversed.

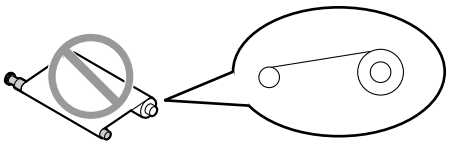

- The ink film is slack or creased.

6 Close the back cover securely by pushing down on the notched area at both ends (①).

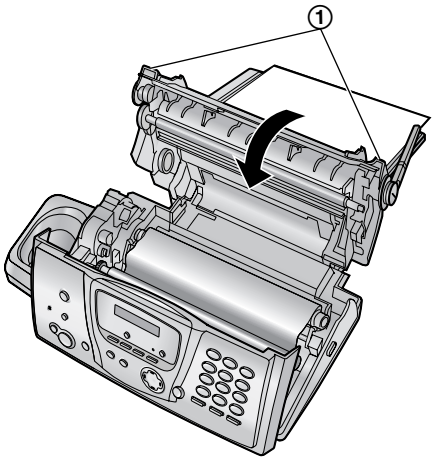

7 Close the front cover securely.

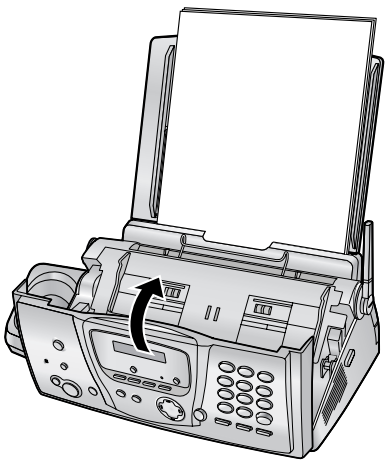

Download from Www.Somanuals.com. All Manuals Search And Download.

8 Remove the recording paper and straighten. Pull the tension plate forward (①) and insert the paper. Then push the tension plate back.

12.4.2 When the recording paper was not fed into the unit properly

The base unit display will show the following.

```
CHECK PAPER
```

Remove the recording paper and straighten. Pull the tension plate forward (①) and insert the paper. Push the tension plate back, then press **【START】** to clear the message.

Download from Www.Somanuals.com. All Manuals Search And Download.

12.5 Document jams – sending

1 Open the front cover by pulling up the centre part. Remove the jammed document carefully (①).

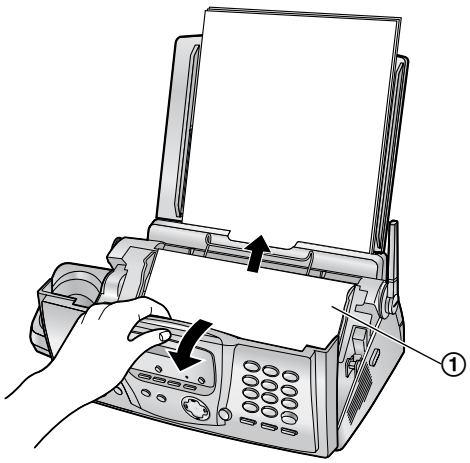

2 Close the front cover securely.

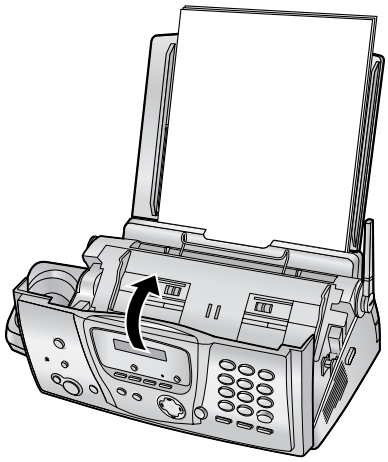

Note:

- Do not pull out the jammed paper forcibly before opening the front cover.

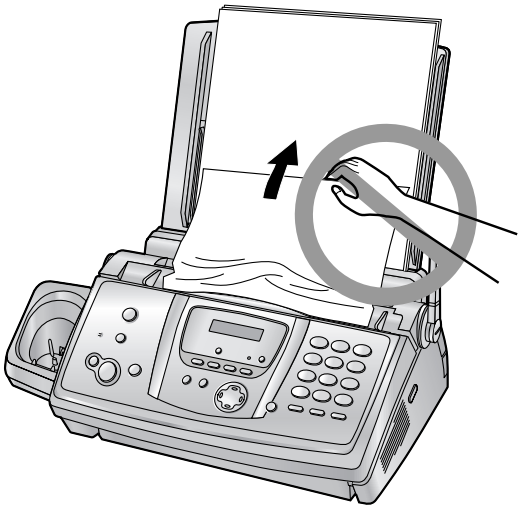

Download from Www.Somanuals.com. All Manuals Search And Download.

12.6 Document feeder / scanner glass cleaning

Clean the document feeder/scanner glass when:
– Documents frequently misfeed.
– Smudges or black/white lines appear on the original document when sending or copying.

1 Disconnect the power cord and the telephone line cord.

2 Open the front cover by pulling up the centre part.

3 Clean the document feeder rollers (①) and rubber flap (②) with a cloth moistened with isopropyl rubbing alcohol, and let all parts dry thoroughly. Clean the scanner glass (③) with a soft, dry cloth.

Caution:
- **Do not use paper products, such as paper towels or tissues.**

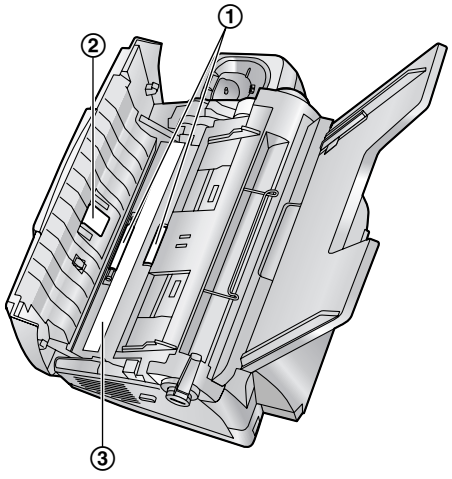

4 Close the front cover securely.

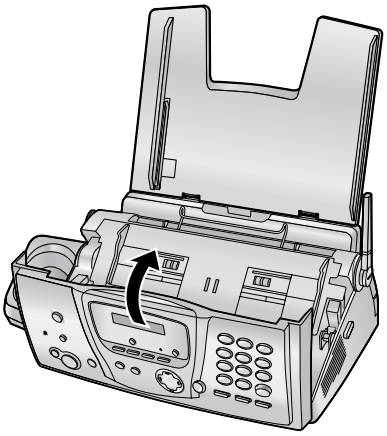

5 Connect the power cord and the telephone line cord.

Download from Www.Somanuals.com. All Manuals Search And Download.

12.7 Thermal head cleaning

If smudges or black/white lines appear on a copied/received document, check whether there is dust on the thermal head. Clean the thermal head to remove the dust.

1 Disconnect the power cord and the telephone line cord.

2 Open the front cover by pulling up the centre part.

3 Release the back cover by pushing the green button (①).

- You can also release the back cover by pushing in the green lever (②).

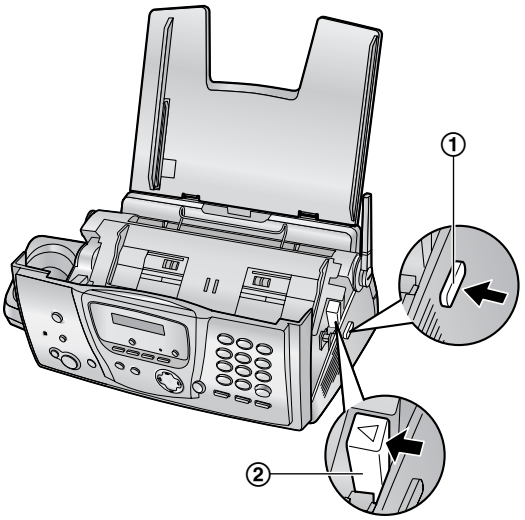

4 Open the back cover.

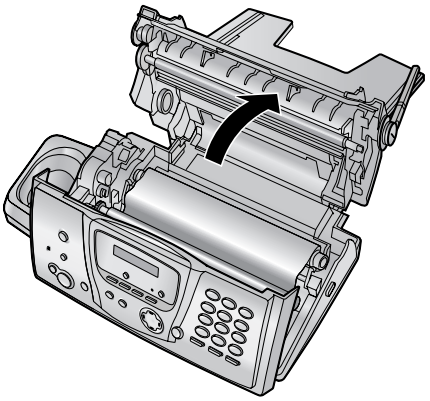

5 Remove the ink film (①).

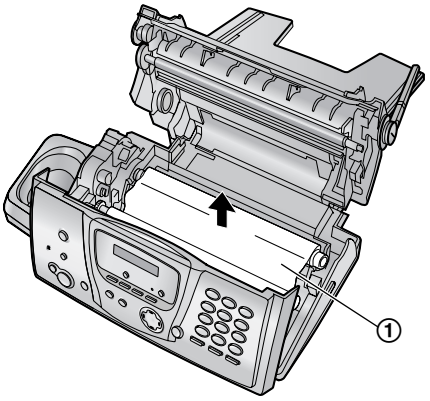

Download from Www.Somanuals.com. All Manuals Search And Download.

6 Clean the thermal head (①) with a cloth moistened with isopropyl rubbing alcohol, and let it dry thoroughly.

Caution:

- **To prevent a malfunction due to static electricity, do not use a dry cloth and do not touch the thermal head directly.**

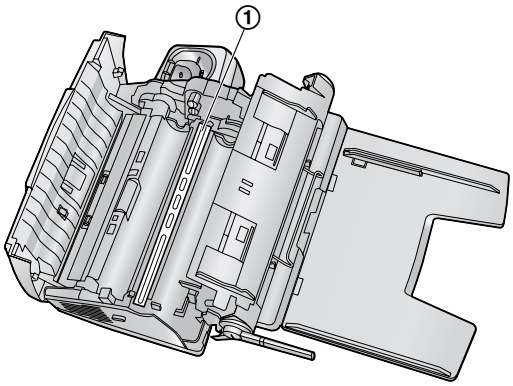

7 Reinstall the ink film and close the covers (see steps 4 to 7 on page 14).

8 Connect the power cord and the telephone line cord.

Download from Www.Somanuals.com. All Manuals Search And Download.

13.1 Reference lists and reports (Base unit only)

You can print out the following lists and reports for your reference.

"SETUP LIST":
provides you with the current settings of the base unit programming features (page 59 to page 62).

"FAX NO. LIST":
provides you with names and numbers which are stored in the base unit phonebook.

"JOURNAL REPORT":
keeps records of fax transmission and reception. This report can be printed automatically after every 30 fax communications (feature #22 on page 60).

"PRINTER TEST":
allows you to check the print quality of your unit. If the test print has a smudge, or blurred points or lines, clean the thermal head (page 93).

"BROADCAST LIST":
provides you with names and numbers which are stored in the broadcast memory (page 41).

"CALLER ID LIST":
keeps records of the last 30 different callers of the base unit after subscribing to a Caller ID service. To print automatically after every 30 callers, activate feature #26 (page 60).

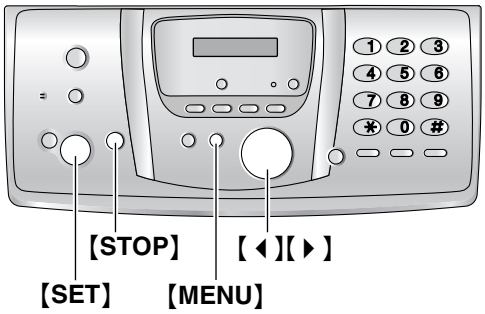

1 Press **【MENU】** repeatedly to display "**PRINT REPORT**".

2 Press **【◀】** or **【▶】** repeatedly to display the desired item.

3 Press **【SET】** to start printing.
- To stop printing, press **【STOP】** 2 times.

4 Press **【MENU】**.

Download from Www.Somanuals.com. All Manuals Search And Download.

13.2 Specifications

13.2.1 Base unit

■ **Applicable lines:**
Public Switched Telephone Network

■ **Document size:**
Max. 216 mm in width, Max. 600 mm in length

■ **Effective scanning width:**
208 mm

■ **Effective printing width:**
A4: 202 mm

■ **Transmission time[*1]:**
Approx. 8 s/page (ECM-MMR)[*2]

■ **Scanning density:**
Horizontal: 8 pels/mm
Vertical: 3.85 lines/mm – in standard resolution, 7.7 lines/mm – in fine/photo resolution, 15.4 lines/mm – in super fine resolution

■ **Photo resolution:**
64-level

■ **Scanner type:**
Contact Image Sensor

■ **Printer type:**
Thermal Transfer on plain paper

■ **Data compression system:**
Modified Huffman (MH), Modified READ (MR), Modified Modified READ (MMR)

■ **Modem speed:**
14,400 / 12,000 / 9,600 / 7,200 / 4,800 / 2,400 bps; Automatic Fallback

■ **Operating environment:**
5 °C – 35 °C, 20 % – 80 % RH (Relative Humidity)

■ **Dimensions:**
Approx. height 128 mm × width 389 mm × depth 242 mm

■ **Mass (Weight):**
Approx. 3.4 kg

■ **Power consumption:**
Standby: Approx. 6 W
Transmission: Approx. 16 W
Reception: Approx. 50 W (When receiving a 20 % black document)
Copy: Approx. 50 W (When copying a 20 % black document)
Maximum: Approx. 130 W (When copying a 100 % black document)

■ **Power supply:**
220 V – 240 V AC, 50/60 Hz

■ **Fax memory capacity[*3]:**
Approx. 25 pages of memory transmission
Approx. 28 pages of memory reception
(Based on the ITU-T No. 1 Test Chart in standard resolution, without using the Error Correction Mode.)

■ **Voice memory capacity[*4]:**
Approx. 18 minutes of recording time including greeting messages

■ **Copy memory capacity:**
Approx. 10 pages (Based on the ITU-T No.1 Test Chart in fine resolution.)

*1 Transmission speed depends upon the contents of the pages, resolution, telephone line conditions and capability of the other party's machine.
*2 Transmission speed is based upon the ITU-T No. 1 Test Chart. If the capability of the other party's machine is inferior to your unit, the transmission time may be longer.
*3 If an error occurs during fax reception, such as a paper jam or if the recording paper runs out, the fax and subsequent faxes will be retained in memory.
*4 Recording time may be reduced by the calling party's background noise.

ITU-T No. 1 Test Chart

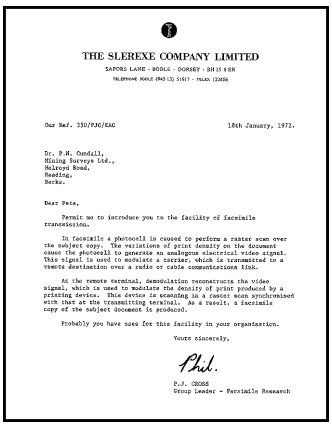

THE SLEREXE COMPANY LIMITED

SAUNDERS LANE - WOOLE - DORSET - BH 15 4ER

TELEPHONE WOOLE (0945 13) 51617 - TELEX 123456

Our Ref. 350/PJC/EAC 18th January, 1973.

Dr. P.M. Cundall,
Mining Surveys Ltd.,
Holroyd Road,
Reading,
Berks.

Dear Pete,

Permit me to introduce you to the facility of facsimile transmission.

In facsimile a photocell is caused to perform a raster scan over the subject copy. The variations of print density on the document cause the photocell to generate an analogous electrical video signal. This signal is used to modulate a carrier, which is transmitted to a remote destination over a radio or cable communications link.

At the remote terminal, demodulation reconstructs the video signal, which is used to modulate the density of print produced by a printing device. This device is scanning in a raster scan synchronised with that at the transmitting terminal. As a result, a facsimile copy of the subject document is produced.

Probably you have uses for this facility in your organisation.

Yours sincerely,

Phil.

P.J. CROSS
Group Leader - Facsimile Research

Recording paper specifications
Recording paper size: A4: 210 mm × 297 mm
Recording paper weight: 64 g/m^2 to 80 g/m^2

Note for recording paper:
- Do not use the following types of paper:
  – Paper with a cotton and/or fibre content that is over 20 %, such as letterhead paper or paper used for resumes
  – Extremely smooth or shiny paper, or paper that is highly textured
  – Coated, damaged or wrinkled paper

Download from Www.Somanuals.com. All Manuals Search And Download.

  - Paper with foreign objects attached, such as tabs or staples
  - Paper which has dust, lint or oil stains
  - Paper that will melt, vaporize, discolour, scorch or emit dangerous fumes near 200 °C, such as vellum paper. These materials may transfer onto the fusing roller and cause damage.
  - Moist paper
- Some paper only accepts print on one side. Try using the other side of the paper if you are not happy with the print quality or if misfeeding occurs.
- For proper paper feeding and best print quality, we recommend using long-grained paper.
- Do not use paper of different types or thickness at the same time. This may cause a paper jam.
- Avoid double-sided printing.
- Do not use paper printed from this unit for double-sided printing with other copiers or printers. This may cause a paper jam.
- To avoid curling, do not open paper packs until you are ready to use the paper. Store unused paper in the original packaging, in a cool and dry location.

13.2.2 Handset

■ **Standard:**
DECT (Digital Enhanced Cordless Telecommunications)
GAP (Generic Access Profile)
■ **Number of channels:**
120 Duplex Channels
■ **Frequency range:**
1.88 GHz to 1.9 GHz
■ **Duplex procedure:**
TDMA (Time Division Multiple Access)
■ **Channel spacing:**
1,728 kHz
■ **Bit rate:**
1,152 kbit/s
■ **Modulation:**
GFSK
■ **RF transmission power:**
Approx. 250 mW
■ **Operating environment:**
5 °C – 40 °C, 20 % – 80 % RH (Relative Humidity)
■ **Dimensions:**
Approx. height 148 mm × width 48 mm × depth 32 mm
■ **Mass (Weight):**
Approx. 130 g

Note:
- Design and specifications are subject to change without notice.
- The pictures and illustrations in these instructions may vary slightly from the actual product.

Download from Www.Somanuals.com. All Manuals Search And Download.

14.1 Index

#01 Date and time: *24*
#02 Your logo: *25*
#03 Your fax number: *26*
#04 Sending report: *40*, *59*
#06 FAX ring setting: *59*
#06 TAM ring setting: *47*, *59*
#10 Message recording time: *59*
#11 Remote operation ID: *59*
#13 Dialling mode: *23*
#17 External ring tone: *59*
#22 Automatic journal report: *40*, *60*
#23 Overseas mode: *60*
#25 Delayed transmission: *60*
#26 Automatic Caller ID list: *60*
#31 Distinctive Ring: *50*, *60*
#34 Quick scan: *39*, *51*, *60*
#36 Receiving reduction: *61*
#39 Display contrast: *61*
#41 Fax activation code: *61*
#42 Message alert: *61*
#43 Recording time alert: *61*
#44 Memory reception alert: *61*
#46 Friendly reception: *61*
#47 Voice guidance: *61*
#54 Greeting recording time: *53*, *62*
#58 Scan contrast: *62*
#67 Incoming message monitor: *62*
#68 ECM selection: *62*
#73 Manual answer mode: *62*
#76 Connecting tone: *62*
#77 Auto answer: *62*
#78 TEL/FAX ring setting: *62*
#80 Set default: *62*

A Accessories: *8*
Paper tray: *16*
Advanced features: *60*
Alarm: *67*
Auto answer setting: *62*
Auto talk feature: *29*, *69*

B Base unit
Additional base units: *73*
Cancelling: *74*
PIN: *71*
Selecting: *73*
Base unit phonebook
Editing: *32*
Erasing: *32*
Making a phone call: *32*
Sending faxes: *41*
Storing: *32*
Basic features: *59*
Battery
Charge: *20*
Installation: *18*
Life: *20*
Replacement: *18*
Broadcast transmission: *41*
Button description
Base unit: *10*
Handset: *11*

C Call bar: *69*
Caller ID: *33*
Calling back: *35*
Storing: *37*
Caller ID list: *34*, *60*, *95*
Call restriction: *71*
Call waiting: *34*
Category: *30*
Chain dial: *31*
Character entry
Base unit: *25*
Handset: *77*
Cleaning: *92*, *93*
Conference calls: *75*
Connecting tone: *62*
Connections: *19*
Copy: *51*
Collation: *52*
Enlarge: *51*
Reduce: *51*

D Date and time: *23*
Delayed transmission: *60*
Dialling mode: *23*
Display (Base unit)
Contrast: *61*
Error messages: *80*
Display (Handset)
Contrast: *69*
Description: *12*
Language: *68*
Standby mode: *68*
Document size: *40*
Duplex ring service: *50*, *60*

E ECM selection: *62*
Emergency call: *71*
Error messages: *79*
Extension telephone: *45*

F Fax activation code: *61*

Download from Www.Somanuals.com. All Manuals Search And Download.

Fax number: *26*
FAX ONLY mode: *43*, *48*
Flash: *70*
Friendly reception: *61*

G Greeting message: *53*

H Handset
Additional handsets: *73*
Cancelling: *74*
Locator: *74*
PIN: *69*
Registration: *73*
Handset phonebook
Copying: *76*
Editing: *30*
Erasing: *31*
Making a phone call: *30*
Storing: *29*
Help: *21*

I Incoming message monitor: *62*
Ink film
Installing: *14*
Replacing: *16*
Intercom: *75*

J Jams
Document: *91*
Recording paper: *88*
Journal report: *40*, *60*
Junk fax prohibitor: *49*

K Key lock: *28*
Key tone: *69*

L Language: *68*
Listening to recorded messages: *54*
From a remote location: *56*
Logo: *25*

M Manual answer setting: *62*
Memory reception alert: *61*
Message alert: *61*
Message recording time: *59*

N Navigator: *10*, *11*
Night mode: *67*

O One touch dial: *31*
Overseas mode: *60*

P Pause length: *70*
Phonebook
Base unit: *32*
Handset: *29*
PIN
Base unit: *71*
Handset: *69*
Polling: *48*
Power failure: *87*
Power ON/OFF (Handset): *21*
Programming
Base unit programming: *58*
Handset programming: *66*

Q Quick scan: *39*, *51*, *60*

R Receiving faxes
Automatically: *47*
Manually: *45*
Receiving reduction: *61*
Recording
Greeting message: *53*
Memo message: *54*
Recording paper: *17*, *96*
Recording time alert: *61*
Recording time for TAM/FAX greeting message: *53*, *62*
Redialling
Base unit: *28*, *39*, *41*
Handset: *27*
Redial list: *27*
Registration: *73*
Remote operation: *56*
Remote operation ID: *59*
Repeater: *74*
Reports
Broadcast programming: *95*
Broadcast sending: *42*
Caller ID list: *34*, *60*, *95*
Fax number: *95*
Journal: *40*, *60*, *95*
Power down: *87*
Printer test: *95*
Sending: *40*, *59*
Setup: *95*
Reset
Base unit: *62*
Handset: *69*, *71*
Resolution: *39*, *51*
Ringer volume
Base unit: *22*
Handset: *22*
Ring setting
FAX ONLY: *59*
TAM/FAX: *59*
TEL/FAX: *62*
Ring tone
Base unit: *59*
Handset: *67*

Download from Www.Somanuals.com. All Manuals Search And Download.

S Scan contrast: *62*
Sending faxes
Base unit phonebook: *41*
Broadcast: *42*
From memory: *39*
Manually: *39*
Sending report: *40*, *59*
Storing
Broadcast: *41*
One touch dial: *31*
Phonebook: *29*, *32*

T TAM/FAX mode: *43*, *47*
TEL/FAX mode: *44*, *46*
TEL mode: *44*, *45*
Toll saver: *47*
Transferring calls: *75*

V Voice enhancer: *27*
Voice guidance: *61*
Voice time/day stamp: *54*
Volume
Base unit: *22*
Handset: *22*

Download from Www.Somanuals.com. All Manuals Search And Download.

Notes

Download from Www.Somanuals.com. All Manuals Search And Download.

Notes

Download from Www.Somanuals.com. All Manuals Search And Download.

Notes

Download from Www.Somanuals.com. All Manuals Search And Download.

Sole agent:
Shun Hing Technology Co., Ltd.
9th Floor, Peninsula Centre, 67 Mody Road, Tsimshatsui East, Kowloon, Hong Kong
Web site: http://www.panasonic.oa.com.hk

Manufacturer:
Panasonic Communications (Malaysia) Sdn. Bhd.
PLO No.1, Kawasan Perindustrian Senai, KB No. 104, 81400 Senai, Negeri Johor Darul Ta'zim, Malaysia

Global web site:
http://www.panasonic.co.jp/global/

Copyright:
- This material is copyrighted by Panasonic Communications Co., Ltd., and may be reproduced for internal use only. All other reproduction, in whole or in part, is prohibited without the written consent of Panasonic Communications Co., Ltd.

© 2005 Panasonic Communications Co., Ltd. All Rights Reserved.

Download from Www.Somanuals.com. All Manuals Search And Download.

Free Manuals Download Website

http://myh66.com

http://usermanuals.us

http://www.somanuals.com

http://www.4manuals.cc

http://www.manual-lib.com

http://www.404manual.com

http://www.luxmanual.com

http://aubethermostatmanual.com

Golf course search by state

http://golfingnear.com

Email search by domain

http://emailbydomain.com

Auto manuals search

http://auto.somanuals.com

TV manuals search

http://tv.somanuals.com