Reebok CYC6

Patent Pending

Model No. RBEX33190
Serial No. _____

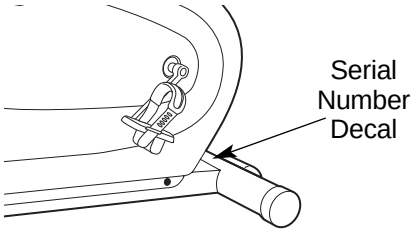

USER'S MANUAL

QUESTIONS?

As a manufacturer, we are committed to providing complete customer satisfaction. If you have questions, or if there are missing or damaged parts, we will guarantee complete satisfaction through direct assistance from our factory.

TO AVOID UNNECESSARY DELAYS, PLEASE CALL DIRECT TO OUR TOLL-FREE CUSTOMER HOT LINE. The trained technicians on our customer hot line will provide immediate assistance, free of charge to you.

CUSTOMER HOT LINE:
1-800-999-3756
Mon.–Fri., 6 a.m.–6 p.m. MST

⚠ CAUTION

Read all precautions and instructions in this manual before using this equipment. Keep this manual for future reference.

Visit our website at

www.reebokhomefitness.com

new products, prizes, fitness tips, and much more!

Download from Www.Somanuals.com. All Manuals Search And Download.

TABLE OF CONTENTS

IMPORTANT PRECAUTIONS 2
BEFORE YOU BEGIN 3
ASSEMBLY 4
HOW TO OPERATE THE EXERCISE CYCLE 8
MAINTENANCE AND TROUBLE-SHOOTING 12
EXERCISE GUIDELINES 13
PART LIST 14
EXPLODED DRAWING 15
HOW TO ORDER REPLACEMENT PARTS . . . . . Back Cover
LIMITED WARRANTY . . . . . Back Cover

IMPORTANT PRECAUTIONS

⚠ WARNING: To reduce the risk of serious injury, read the following important precautions before using the REEBOK® CYC6 exercise cycle.

1. **Read all instructions in this manual before using the CYC6.**
2. **It is the responsibility of the owner to ensure that all users of the CYC6 are adequately informed of all precautions. Use the CYC6 only as described in this manual.**
3. **Use the CYC6 indoors on a level surface. Keep the CYC6 away from moisture and dust. Place a mat under the CYC6 to protect the floor or carpet.**
4. **Inspect and tighten all parts regularly. Replace any worn parts immediately.**
5. **Keep children under the age of 12 and pets away from the CYC6 at all times.**
6. **The CYC6 should not be used by persons weighing more than 250 pounds.**
7. **Wear appropriate clothing when exercising; do not wear loose clothing that could become caught on the CYC6. Always wear athletic shoes when using the CYC6.**
8. **Always keep your back straight when using the CYC6. Do not arch your back.**
9. **If you feel pain or dizziness while exercising, stop immediately and cool down.**
10. **The pulse sensor is not a medical device. Various factors, including the user's movement, may affect the accuracy of heart rate readings. The pulse sensor is intended only as an exercise aid in determining heart rate trends in general.**
11. **The CYC6 is intended for in-home use only. Do not use the CYC6 in a commercial, rental, or institutional setting.**

⚠ WARNING: Before beginning this or any exercise program, consult your physician. This is especially important for persons over the age of 35 or persons with pre-existing health problems. Read all instructions before using. ICON assumes no responsibility for personal injury or property damage sustained by or through the use of this product.

Download from Www.Somanuals.com. All Manuals Search And Download.

BEFORE YOU BEGIN

Congratulations for selecting the new REEBOK® CYC6 exercise cycle. Cycling is one of the most effective exercises for increasing cardiovascular fitness, building endurance and toning the entire body. The REEBOK® CYC6 offers an impressive array of features designed to let you enjoy this healthful exercise in the comfort and privacy of your home.

For your benefit, read this manual carefully before you use the REEBOK® CYC6. If you have additional questions, please call our Customer Service Department toll-free at 1-800-999-3756, Monday through Friday, 6 a.m. until 6 p.m. Mountain Time (excluding holidays). To help us assist you, please mention the product model number and serial number when calling. The model number is RBEX33190. The serial number can be found on a decal attached to the REEBOK® CYC6 (see the front cover of this manual).

Before reading further, please familiarize yourself with the parts that are labeled in the drawing below.

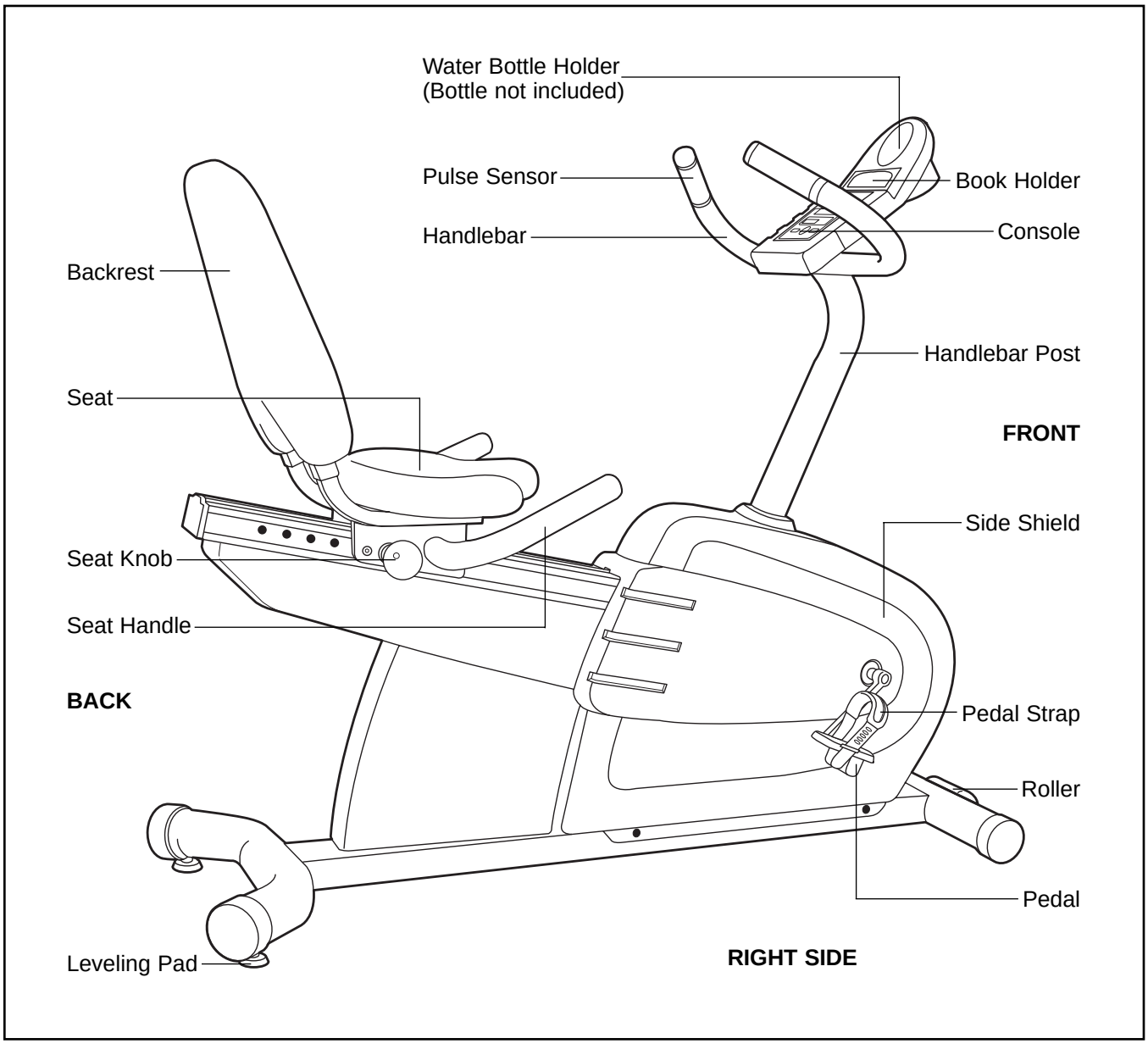

Download from Www.Somanuals.com. All Manuals Search And Download.

ASSEMBLY

Assembly requires two persons. Place all parts of the exercise cycle in a cleared area and remove the packing materials. Do not dispose of the packing materials until assembly is completed.

Assembly requires the included tools and your own adjustable wrench .

PART CHART

Use the part drawings below to identify the small parts used in assembly. The number in parenthesis below each drawing refers to the key number of the part, from the PART LIST on page 14. The second number refers to the quantity used in assembly. **Note: Some small parts may have been pre-attached for shipping. If a part is not in the parts bag, check to see if it has been pre-assembled.**

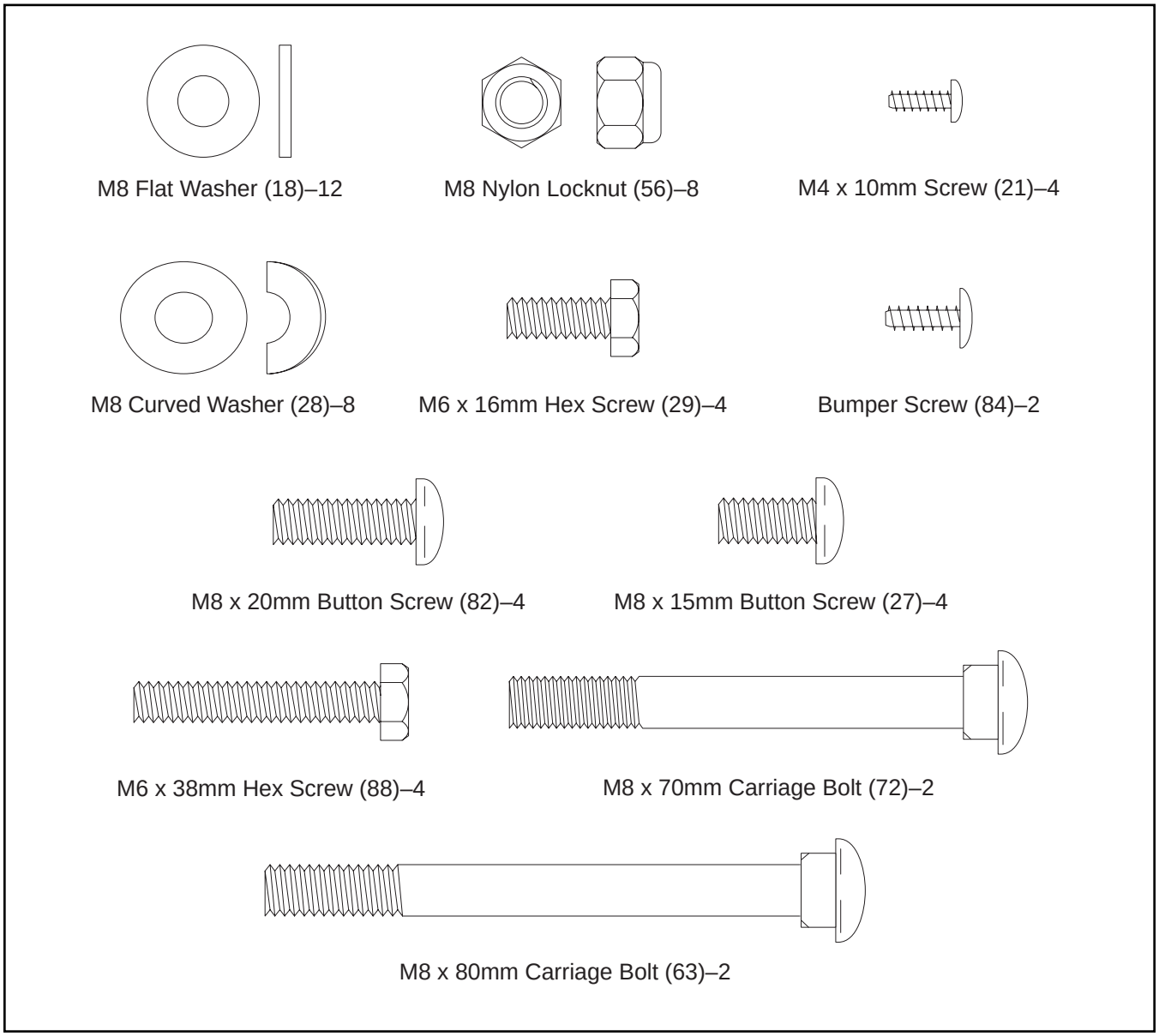

Download from Www.Somanuals.com. All Manuals Search And Download.

1. Attach the Front Stabilizer (2) to the front of the Frame (1) with two M8 x 70mm Carriage Bolts (72), two M8 Curved Washers (28), and two M8 Nylon Locknuts (56). Make sure that the Front Stabilizer is turned so the Roller (75) is not touching the floor.

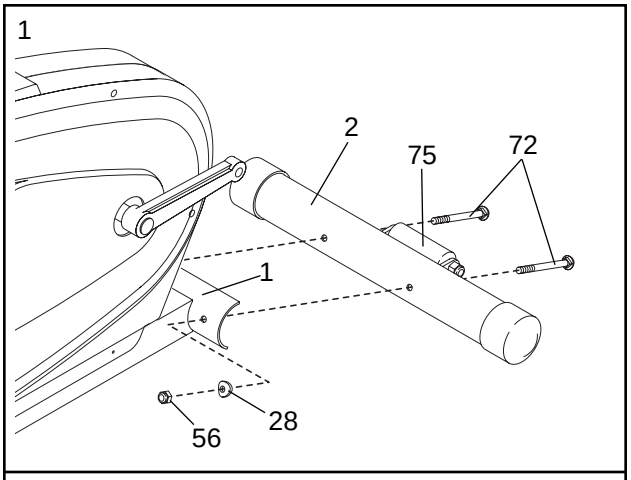

2. Attach the Rear Stabilizer (3) to the rear of the Frame (1) with two M8 x 80mm Carriage Bolts (63), two M8 Curved Washers (28), and two M8 Nylon Locknuts (56).

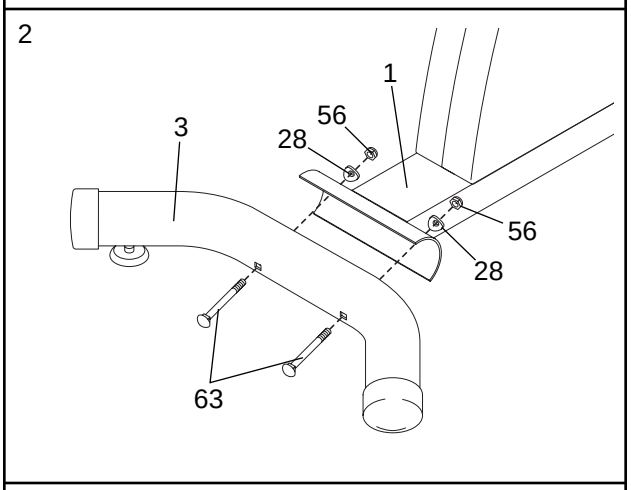

3. While a second person holds the Handlebar Post (6) near the Frame (1) as shown, connect the Upper Wire Harness (16) to the Lower Wire Harness (87).

   Carefully slide the Handlebar Post (6) onto the Frame (1). **Be careful to avoid pinching the Wire Harnesses (16, 87).** Attach the Handlebar Post to the Frame with four M8 x 15mm Button Screws (27) and four M8 Curved Washers (28).

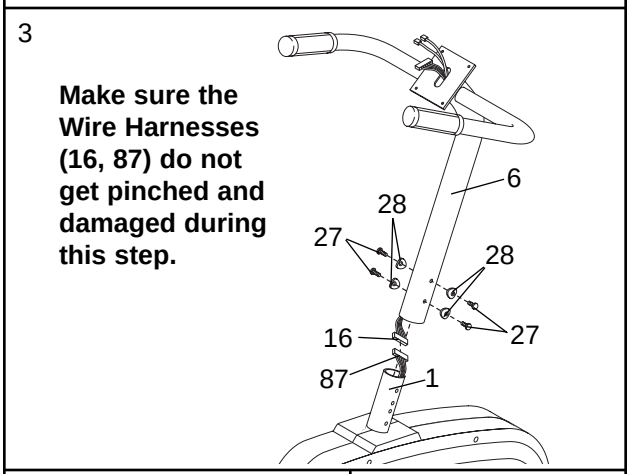

4. The Console (9) requires two “AA” batteries (not included); alkaline batteries are recommended. Remove the Battery Cover (17) from the back of the Console. Press two batteries into the battery clip as shown in the inset drawing. **Make sure that the negative (–) ends of the batteries are touching the springs.** Reattach the Battery Cover.

   Connect the two Pulse Wires (22) to the two wires extending from the Console (9). Next, connect the Upper Wire Harness (16) to the back of the Console. Insert all wires into the Handlebar Post (6).

   Attach the Console (9) to the Handlebar Post (6) with four M4 x 10mm Screws (21).

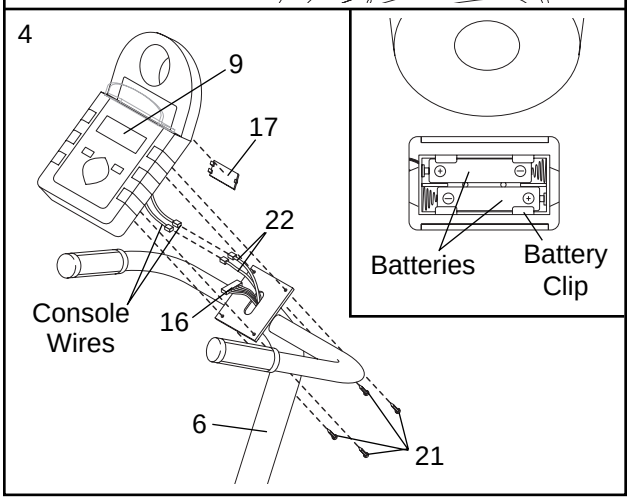

Download from Www.Somanuals.com. All Manuals Search And Download.

5. Attach the Seat (12) to the Seat Carriage (11) with four M6 x 16mm Hex Screws (29) and four M8 Flat Washers (18).

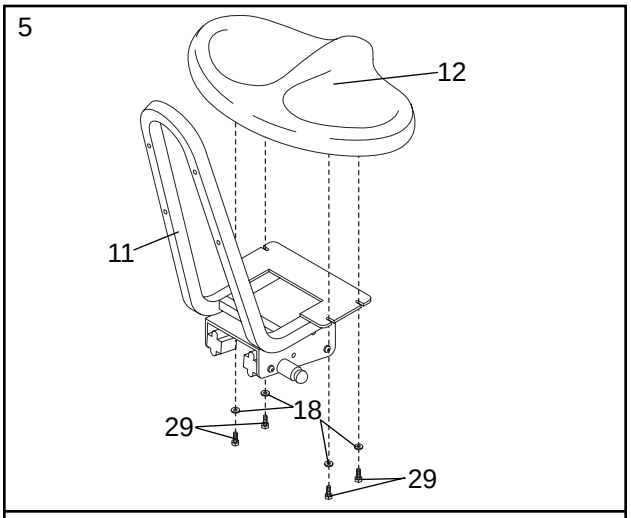

6. Attach a Seat Handle (14) to the Seat Carriage (11) with two M8 x 20mm Button Screws (82), two M8 Flat Washers (18), and two M8 Nylon Locknuts (56).

   Attach the other Seat Handle (14) to the Seat Carriage (11) in the same manner.

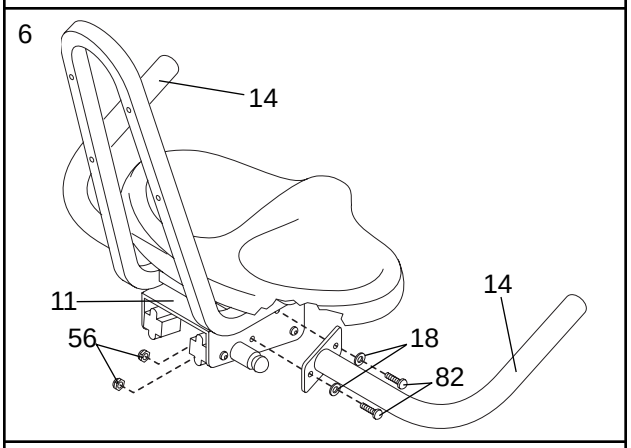

7. Attach the Backrest (13) to the Seat Carriage (11) with four M6 x 38mm Hex Screws (88) and four M8 Flat Washers (18).

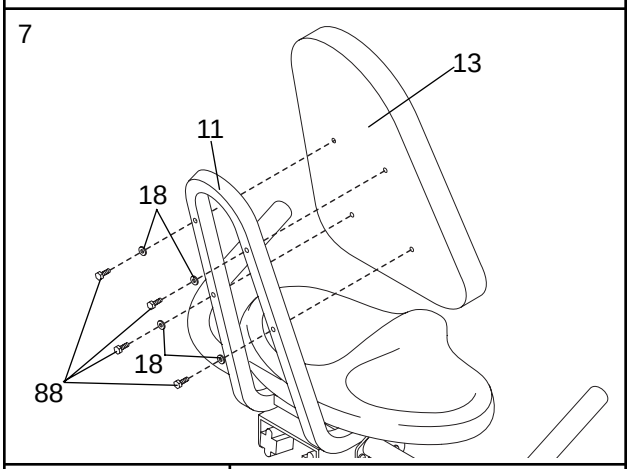

8. Pull the seat knob and slide the Seat Carriage (11) onto the Seat Rail (7).

   Refer to the inset drawing. Hold the Bumper Axle (86) inside of the Seat Rail (7). Attach a Bumper (85) to each end of the Bumper Axle with a Bumper Screw (84) as shown. Press the Seat Rail Endcap (23) into the end of the Seat Rail.

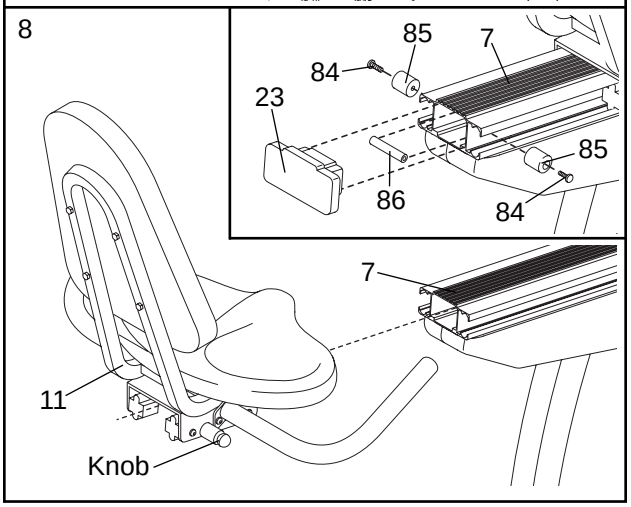

Download from Www.Somanuals.com. All Manuals Search And Download.

9. Firmly tighten the four 5/16” x 1” Button Screws (80) in the Seat Carriage (11).

   Pull the seat knob and slide the Seat Carriage (11) to the desired position. Release the seat knob and **slide the Seat Carriage back and forth slightly until it locks into position.**

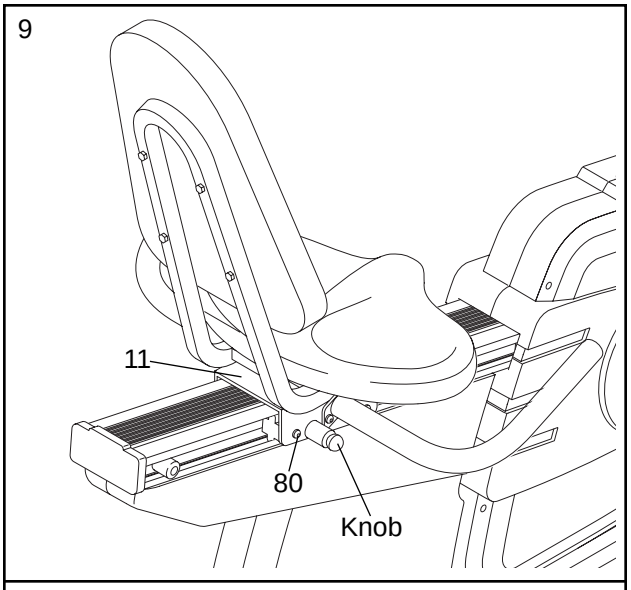

10. Identify the Right Pedal (37) (there is an “R” on the Right Pedal for identification). Using an adjustable wrench, tighten the Right Pedal *clockwise* into the right Crank Arm (34).

    Tighten the Left Pedal *counterclockwise* into the left Crank Arm (not shown).

    Adjust the Pedal Strap (38) on the Right Pedal (37) to the desired position. Press the Pedal Strap onto the tab on the Right Pedal.

    Adjust the Pedal Strap on the Left Pedal in the same manner (not shown).

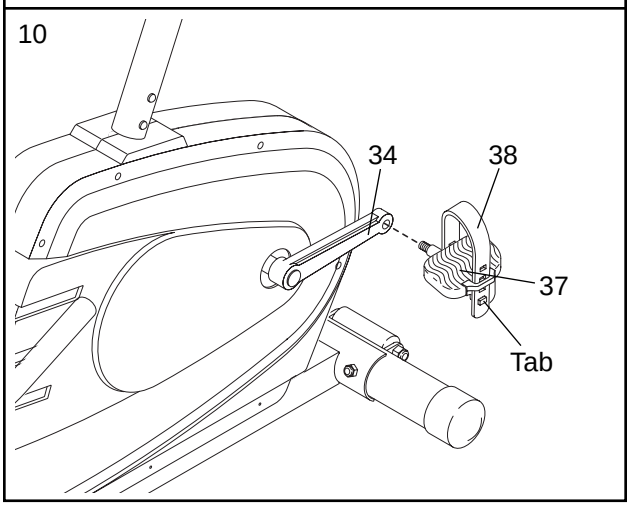

11. **Make sure that all parts are tightened before you use the exercise cycle. Place a mat beneath the exercise cycle to protect the floor.**

Download from Www.Somanuals.com. All Manuals Search And Download.

HOW TO OPERATE THE EXERCISE CYCLE

DESCRIPTION OF THE CONSOLE

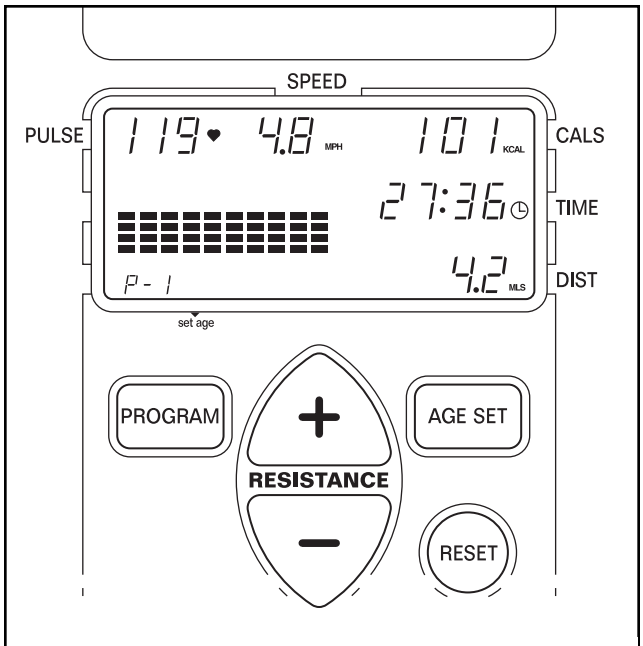

If there is a thin sheet of clear plastic on the face of the console, remove it.

The innovative console offers an impressive array of features to help you get the most from your workouts.

When the manual program is selected, you can adjust the resistance of the pedals with a touch of a button. As you exercise, the console will display your pedaling speed, the number of Calories you have burned, the elapsed time, and the distance you have pedaled. You can even measure your heart rate using the built-in pulse sensor.

The console also offers ten preset workout programs. Five programs automatically change the resistance of the pedals as they guide you through effective workouts, and five programs automatically adjust the resistance of the pedals to keep your heart rate near preselected levels during your workouts.

Note: Before the console can be operated, two “AA” batteries must be installed. See assembly step 4 on page 5 for instructions.

HOW TO USE THE MANUAL PROGRAM

1 Turn on the power

To turn on the power, press any button on the console or simply begin pedaling. Note: If batteries were just installed, the power will already be on.

2 Select the manual program

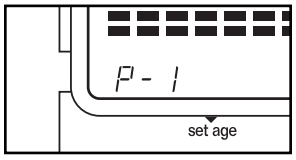

Each time the power is turned on, the manual program will automatically be selected, as shown by the “P-1” in the display (P-1 is the manual program). If you have selected a different program, select the manual mode again by pressing the program button repeatedly until the “P-1” reappears.

3 Begin pedaling and adjust the resistance of the pedals as desired

As you exercise, press the resistance + and – buttons to adjust the resistance of the pedals. Note: After the buttons are pressed, it may take a moment for the selected resistance setting to be reached.

4 Follow your progress with the console display

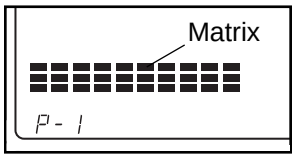

As you exercise, the matrix on the left side of the display will show your progress. During the first minute that you exercise, the first column of the matrix will flash; during the second minute, the second column will flash; during the third minute, the third column will flash, and so forth, until the tenth column is flashing. After you have exercised for ten minutes, the matrix will reset and the first column will begin to flash again.

The matrix will also show the resistance level of the pedals. As you press the resistance + or – button, the height of all of the columns in the matrix will increase or decrease.

Download from Www.Somanuals.com. All Manuals Search And Download.

In addition to the matrix, the display will show your pedaling speed, the number of Calories you have burned, the elapsed time, and the distance you have pedaled. The display will also show your heart rate when the pulse sensor is used (see step 5). **Note: If your heart rate is not shown, press the reset button to reset the pulse sensor.**

5 **Measure your heart rate if desired**

To use the pulse sensor, place your hands on the metal contacts. Your palms must be resting on the upper contacts and your fingers must be touching the lower contacts. **Avoid moving your hands.**

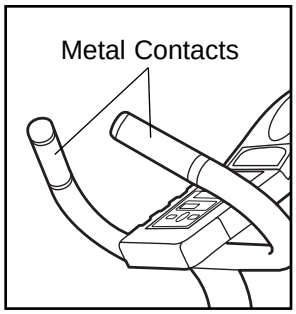

After a moment, the heart-shaped indicator in the display will begin to flash and your heart rate will be shown. For the most accurate heart rate reading, continue to hold the contacts for about 15 seconds. **WARNING: The pulse sensor is not a medical device. Various factors, including the user's movement, may affect the accuracy of heart rate readings. The pulse sensor is intended only as an exercise aid in determining heart rate trends in general.**

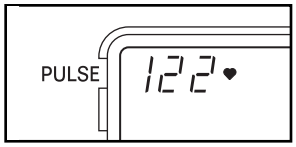

Note: If your heart rate is not shown, press the reset button to reset the pulse sensor. In addition, make sure that your hands are positioned as described above. Be careful not to move your hands excessively or squeeze the metal contacts too tightly.

6 **When you are finished exercising, turn off the power**

To turn off the power, simply wait for a few minutes. If the pedals are not moved and the console buttons are not pressed for a few minutes, the power will turn off automatically.

HOW TO USE A RESISTANCE PROGRAM

1 **Turn on the power**

To turn on the power, press any button on the console. Note: If batteries were just installed, the power will already be on.

2 **Select one of the resistance programs**

Each time the power is turned on, the manual program will be selected, as shown by the “P-1” in the display. To select one of the resistance programs, press the program button repeatedly until a “P-2,” “P-3,” “P-4,” “P-5,” or “P-6” appears in the display.

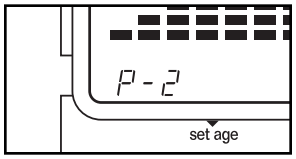

As you select each resistance program, the matrix will show the resistance settings for the program you have selected. If you select program 2, for example, the matrix will show that the resistance will gradually increase during the first half of the program and then decrease during the last half of the program.

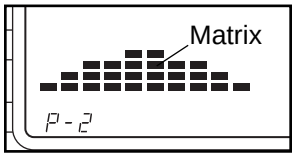

3 **Begin pedaling and follow your progress with the console display**

As you exercise, follow your progress with the matrix on the left side of the display (refer to the drawing above). During the first minute of the program, the first column of the matrix will flash; during the second minute, the second column will flash; during the third minute, the third column will flash. In addition, the resistance of the pedals will automatically change according to the height of the flashing column—the higher the column is, the greater the resistance will be. After ten minutes, the program will be completed.

Note: If the program is too easy or too difficult, press the resistance + or – button to adjust the intensity level of the program. As you press the resistance + or – button, the height of all of the columns in the matrix will increase or decrease.

In addition to the matrix, the display will show your pedaling speed, the number of Calories you have burned, the elapsed time, and the distance you have pedaled. The display will also show your heart rate when you use the pulse sensor (see step 4).

Download from Www.Somanuals.com. All Manuals Search And Download.

4 **Measure your heart rate if desired**

Refer to step 5 on page 9. **Note: If your heart rate is not shown, press the reset button to reset the pulse sensor.**

5 **When you are finished exercising, turn off the power**

To turn off the power, simply wait for a few minutes. If the pedals are not moved and the console buttons are not pressed for a few minutes, the power will turn off automatically.

HOW TO USE A HEART RATE PROGRAM

Each heart rate program automatically adjusts the resistance of the pedals to keep your heart rate near a certain level while you exercise.

Programs 7 and 8 are low-intensity fat burning programs. To burn fat, you must exercise at a low intensity level for a sustained period of time. As you exercise, *pedal at a relatively slow speed*; the resistance of the pedals will increase or decrease as needed to keep your heart rate near the proper level.

Programs 9, 10, and 11 are moderate-intensity aerobic programs. For aerobic exercise, you must exercise at a moderate intensity level for a prolonged period of time. As you exercise, *pedal at a moderate speed*; the resistance of the pedals will increase or decrease as needed to keep your heart rate near the proper level.

⚠ WARNING: ***The pulse sensor may give readings lower than your actual heart rate, especially at fast pedaling speeds.*** **Stop exercising and cool down if you feel faint or dizzy.**

Follow the steps below to use a heart rate program.

1 **Turn on the power**

To turn on the power, press any button on the console. Note: If batteries were just installed, the power will already be on.

2 **Enter your age into the console**

Before you use a heart rate program, you must enter your age into the console. First, press the age set button. The letters “AGE” and the current age setting will appear at the bottom of the display. Press the resistance + or – button to enter your age. After you have entered your age, the display will change back to the main display in about five seconds.

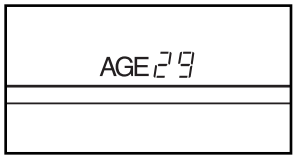

3 **Select one of the heart rate programs**

Each time the power is turned on, the manual program will be selected, as shown by the “P-1” in the display. To select one of the heart rate programs, press the program button repeatedly until a “P-7,” “P-8,” “P-9,” “P10,” or “P11” appears in the display.

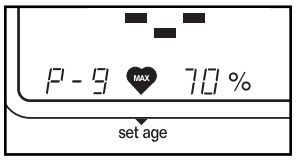

Each heart rate program is designed to keep your heart rate near a certain *percentage* of your *maximum heart rate* while you exercise. (Your maximum heart rate is estimated by subtracting your age from 220. For example, if you are 30 years old, your maximum heart rate is 190.)

Program 7 (P-7) will keep your heart rate near 50% of your maximum heart rate while you exercise, P-8 will keep your heart rate near 60% of your maximum heart rate, P-9 will keep your heart rate near 70% of your maximum heart rate, P10 will keep your heart rate near 80% of your maximum heart rate, and P11 will keep your heart rate near 90% of your maximum heart rate.

4 **Begin pedaling and follow your progress with the console display**

As you exercise, follow your progress with the matrix on the left side of the display. During the first ten seconds of the program, the first column of the matrix will flash. After ten seconds, *the column will move to the right* and the first column will continue to flash. At the end of every ten seconds, *all columns will move to the right* and the first column will continue to flash. Note: As the resistance level of the pedals changes (see step 5 on page 11), the height of the flashing column will also change. Note: During a heart rate program, the resistance buttons will not function.

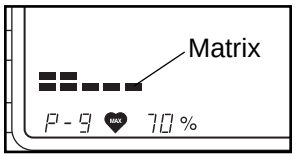

In addition to the matrix, the display will show your pedaling speed, the number of Calories you have burned, the elapsed time, and the distance you have pedaled.

Download from Www.Somanuals.com. All Manuals Search And Download.

5 **Measure your heart rate regularly**

During the program, **slow your pedaling speed briefly and measure your heart rate regularly** (refer to step 5 on page 9). Each time you measure your heart rate, the resistance of the pedals will automatically increase or decrease, if necessary, to keep your heart rate near the preselected percentage of your maximum heart rate. It is not necessary to keep your hands on the metal contacts when you are not measuring your heart rate. **Note: If your heart rate is not shown, press the reset button to reset the pulse sensor.**

6 **When you are finished exercising, turn off the power**

To turn off the power, simply wait for a few minutes. If the pedals are not moved and the console buttons are not pressed for a few minutes, the power will turn off automatically.

HOW TO SELECT KILOMETERS OR MILES

The console can display speed and distance in either kilometers or miles. To change the unit of measurement, first refer to assembly step 4 on page 5 and remove the four screws securing the console. Lift the console a few inches, being careful not to pull on the wires. Next, look into the opening in the back of the console and locate the small switch (see the drawing at the right). Slide the switch up or down to change the unit of measurement. Then, reattach the console with the four screws.

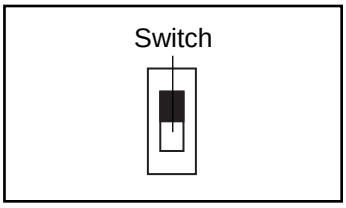

HOW TO ADJUST THE POSITION OF THE SEAT

For effective exercise, the seat should be in the proper position. As you pedal, there should be a slight bend in your knees when the pedals are in the farthest position.

To adjust the seat, pull the seat knob and slide the Seat Carriage (11) to the desired position. Release the seat knob and **slide the Seat Carriage back and forth slightly until it locks into position.**

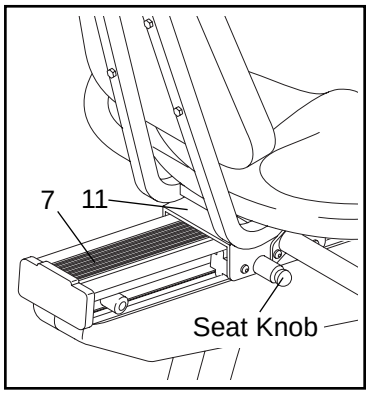

HOW TO ADJUST THE PEDAL STRAPS

To adjust the pedal straps, first pull the ends of the straps off the tabs on the pedals. Press the straps back onto the tabs using different holes in the straps.

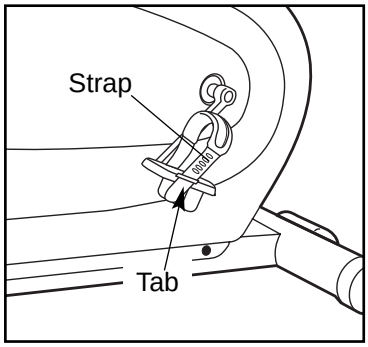

Download from Www.Somanuals.com. All Manuals Search And Download.

MAINTENANCE AND TROUBLE-SHOOTING

Inspect and tighten all parts of the exercise cycle regularly. The exercise cycle can be cleaned with a soft, damp cloth. To prevent damage to the console, keep liquids away from the console and keep the console out of direct sunlight.

BATTERY REPLACEMENT

If the console does not function properly, the batteries should be replaced. To replace the batteries, refer to assembly step 4 on page 5.

HOW TO LEVEL THE EXERCISE CYCLE

If the exercise cycle does not sit flat on the floor, turn one or both of the leveling pads until the exercise cycle is level.

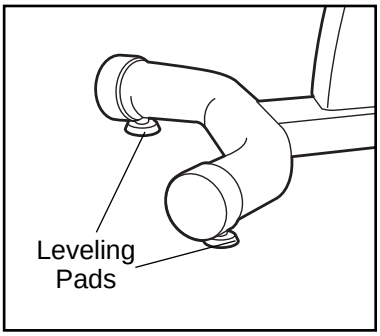

PULSE SENSOR TROUBLE-SHOOTING

- Avoid moving your hands while using the pulse sensor. Excessive movement may interfere with heart rate readings.
- If your heart rate is not shown when the pulse sensor is used, press the reset button to reset the pulse sensor.
- Do not hold the metal contacts too tightly; doing so may interfere with heart rate readings.
- For the most accurate heart rate reading, hold the metal contacts for about 15 seconds.
- For optimal performance of the pulse sensor, keep the metal contacts clean. The contacts can be cleaned with a soft cloth—never use alcohol, abrasives, or chemicals.

Download from Www.Somanuals.com. All Manuals Search And Download.

EXERCISE GUIDELINES

⚠ WARNING: Before beginning this or any exercise program, consult your physician. This is especially important for individuals over the age of 35 or individuals with pre-existing health problems.

⚠ WARNING: The pulse sensor is not a medical device. Various factors may affect the accuracy of heart rate readings. The pulse sensor is intended only as an exercise aid in determining heart rate trends in general.

Exercise has proven essential for good health and well-being. Regular participation in a well-rounded exercise program results in a stronger and more efficient heart, improved respiratory function, increased stamina, better weight management, increased ability to deal with stress, and greater self-esteem.

EXERCISE INTENSITY

To maximize the benefits of exercising, it is important to exercise with the proper intensity. The proper intensity level can be found by using your heart rate as a guide. For effective aerobic exercise, your heart rate should be maintained at a level between 70% and 85% of your maximum heart rate as you exercise. This is known as your training zone. You can find your training zone in the table below. Training zones are listed according to age and physical condition. During the first few months of your exercise program, keep your heart rate near the low end of your training zone as you exercise. After a few months of regular exercise, your heart rate can be increased until it is near the middle of your training zone as you exercise.

AGE	TRAINING ZONE (BEATS/MIN.)	
	UNCONDITIONED	CONDITIONED
20	138–167	133–162
25	136–166	132–160
30	135–164	130–158
35	134–162	129–156
40	132–161	127–155
45	131–159	125–153
50	129–156	124–150
55	127–155	122–149
60	126–153	121–147
65	125–151	119–145
70	123–150	118–144
75	122–147	117–142
80	120–146	115–140

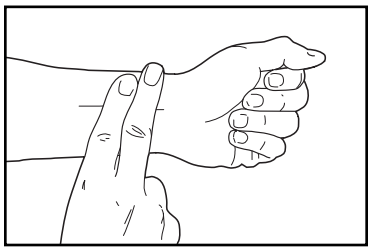

To measure your heart rate, use the built-in pulse sensor. You can also measure your pulse by placing two fingers on your wrist as shown. Stop exercising and take a six-second heartbeat count. Multiply the result by ten to find your heart rate. (A six-second count is used because your heart rate drops quickly when you stop exercising.) If your heart rate is too high, decrease the intensity of your exercise. If your heart rate is too low, increase the intensity of your exercise.

WORKOUT GUIDELINES

A well-rounded workout includes three important parts:

A warm-up, consisting of 5 to 10 minutes of stretching and light exercise. A proper warm-up increases your body temperature, heart rate, and circulation in preparation for exercise.

Training zone exercise, consisting of 20 to 40 minutes of exercising with your heart rate in your training zone. (During the first few weeks of your exercise program, do not keep your heart rate in your training zone for longer than 20 minutes.)

A cool-down, with 5 to 10 minutes of stretching. This will increase the flexibility of your muscles and will help to prevent post-exercise problems.

EXERCISE FREQUENCY

To maintain or improve your condition, plan three workouts each week, with at least one day of rest between workouts. After a few months of regular exercise, you may complete up to five workouts each week, if desired. **CAUTION: Be sure to progress at your own pace and avoid overdoing it. Incorrect or excessive training may result in injury to your health.**

Remember, the key to success is make exercise a regular and enjoyable part of your everyday life.

Download from Www.Somanuals.com. All Manuals Search And Download.

PART LIST—MODEL NO. RBEX33190

R1201A

Key No.	Qty.	Description
1	1	Frame
2	1	Front Stabilizer
3	1	Rear Stabilizer
4	1	Left Side Shield
5	1	Right Side Shield
6	1	Handlebar Post
7	1	Seat Rail
8	1	Console Plate
9	1	Console
10	2	Handlebar Foam
11	1	Seat Carriage
12	1	Seat
13	1	Backrest
14	2	Seat Handle
15	2	Handlebar Endcap
16	1	Upper Wire Harness
17	1	Battery Cover
18	12	M8 Flat Washer
19	1	Pulley
20	6	Console Screw
21	14	M4 x 10mm Screw
22	2	Pulse Wire
23	1	Seat Rail Endcap
24	1	Left Rear Side Shield
25	4	#8 x 5/16” Screw
26	1	Right Rear Side Shield
27	12	M8 x 15mm Button Screw
28	8	M8 Curved Washer
29	4	M6 x 16mm Hex Screw
30	5	Tree Fastener
31	2	Leveling Pad
32	2	Crank Bearing
33	1	Crank
34	2	Crank Arm
35	2	M8 x 20mm Washer Screw
36	2	Crank Cap
37	1	Right Pedal
38	1	Right Pedal Strap
39	1	Crank Nut
40	1	Left Pedal
41	1	Left Pedal Strap
42	2	Front Stabilizer Endcap
43	2	#4 x 3/8” Screw
44	1	Reed Switch/Wire
45	1	M10 Nylon Jam Nut
46	1	Idler Bushing
47	1	Idler Wheel
48	1	Idler Spacer
49	1	Idler Arm
50	1	M10 x 26mm Bolt
51	1	Idler Spring
52	1	M10 Nylon Locknut
53	2	M10 Black Flat Washer
54	4	Sealed Bearing
55	5	M10 Zinc Flat Washer
56	12	M8 Nylon Locknut
57	2	M8 Black Flat Washer
58	2	Adjustment Bracket
59	2	Eye Bolt
60	2	1/4” Nylon Locknut
61	1	Armature
62	1	Generator Housing
63	2	M8 x 80mm Carriage Bolt
64	2	Rear Stabilizer Endcap
65	1	Axle Spacer
66	1	Reduction Axle
67	1	Generator Axle
68	1	Long Belt
69	1	Short Belt
70	1	Control Board
71	2	Pulse Handle Assembly
72	2	M8 x 70mm Carriage Bolt
73	1	Generator Bushing
74	1	Reduction Pulley
75	1	Roller
76	1	Roller Axle
77	2	M10 Black Nylon Locknut
78	3	Armature Bolt
79	4	Seat Carriage Bushing
80	4	5/16” x 1” Button Screw
81	1	Magnet
82	4	M8 x 20mm Button Screw
83	1	Spacer Plate
84	2	Bumper Screw
85	2	Bumper
86	1	Bumper Axle
87	1	Lower Wire Harness
88	4	M6 x 38mm Hex Screw
#	1	User’s Manual
#	1	Allen Wrench

Note: “#” indicates a non-illustrated part. Specifications are subject to change without notice. See the back cover of this manual for information about ordering replacement parts.

Download from Www.Somanuals.com. All Manuals Search And Download.

EXPLODED DRAWING—MODEL NO. RBEX33190

R1201A

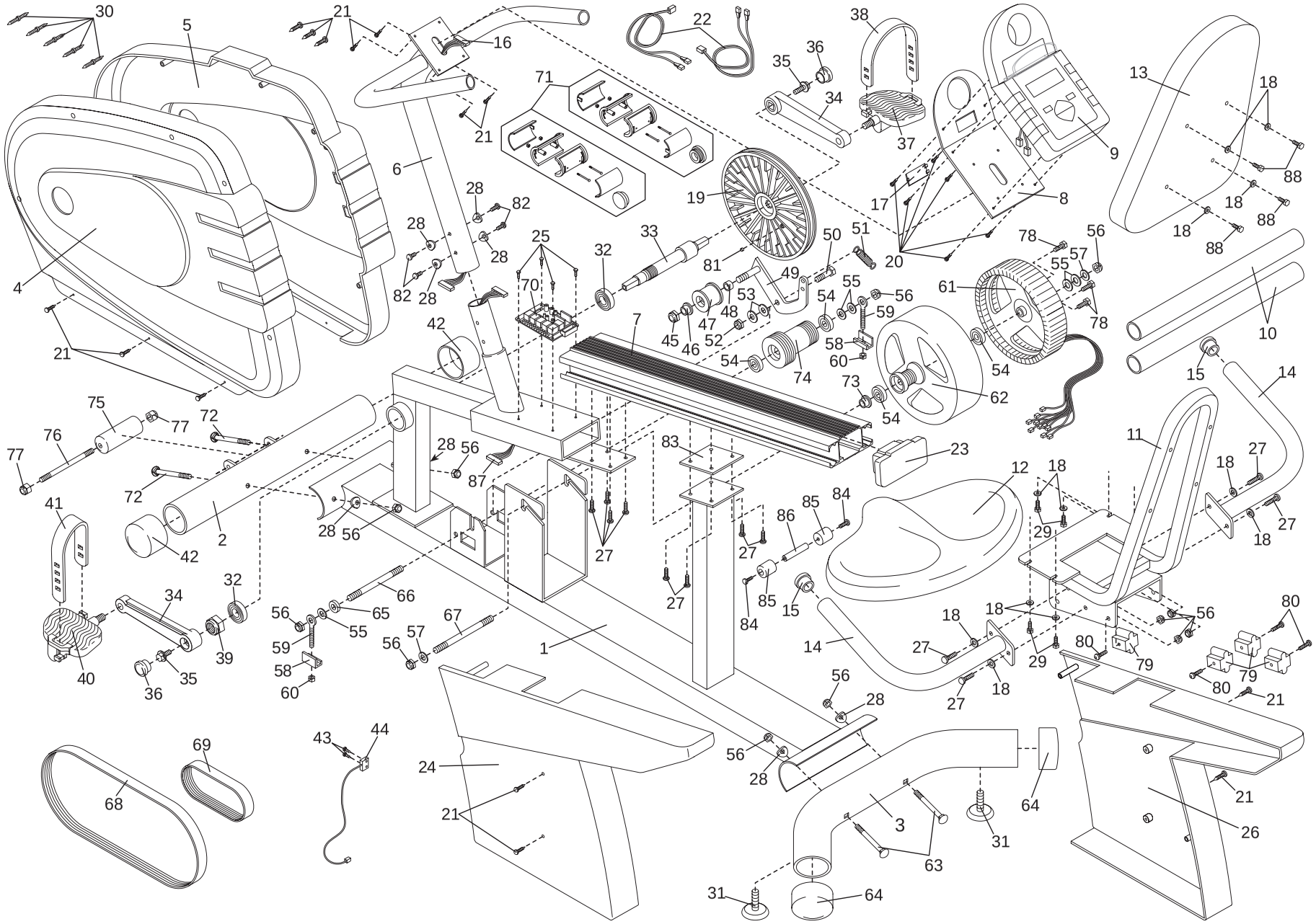

Download from Www.Somanuals.com. All Manuals Search And Download.

HOW TO ORDER REPLACEMENT PARTS

To order replacement parts, call our Customer Service Department toll-free at 1-800-999-3756, Monday through Friday, 6 a.m. until 6 p.m. Mountain Time (excluding holidays). To help us assist you, please be prepared to give the following information:

- the MODEL NUMBER of the product (RBEX33190)
- the NAME of the product (REEBOK® CYC6 exercise cycle)
- the SERIAL NUMBER of the product (see the front cover of this manual)
- the KEY NUMBER and DESCRIPTION of the part(s) (see the PART LIST on page 14 of this manual).

REEBOK and the Vector Logo are registered trademarks and service marks of Reebok. This product is manufactured and distributed under license from Reebok International.

LIMITED WARRANTY

ICON Health & Fitness, Inc. (ICON), warrants this product to be free from defects in workmanship and material, under normal use and service conditions, for a period of ninety (90) days from the date of purchase. This warranty extends only to the original purchaser. ICON's obligation under this warranty is limited to replacing or repairing, at ICON's option, the product through one of its authorized service centers. All repairs for which warranty claims are made must be pre-authorized by ICON. This warranty does not extend to any product or damage to a product caused by or attributable to freight damage, abuse, misuse, improper or abnormal usage or repairs not provided by an ICON authorized service center, products used for commercial or rental purposes, or products used as store display models. No other warranty beyond that specifically set forth above is authorized by ICON.

ICON is not responsible or liable for indirect, special or consequential damages arising out of or in connection with the use or performance of the product or damages with respect to any economic loss, loss of property, loss of revenues or profits, loss of enjoyment or use, costs of removal, installation or other consequential damages of whatsoever nature. Some states do not allow the exclusion or limitation of incidental or consequential damages. Accordingly, the above limitation may not apply to you.

The warranty extended hereunder is in lieu of any and all other warranties and any implied warranties of merchantability or fitness for a particular purpose is limited in its scope and duration to the terms set forth herein. Some states do not allow limitations on how long an implied warranty lasts. Accordingly, the above limitation may not apply to you.

This warranty gives you specific legal rights. You may also have other rights which vary from state to state.

ICON HEALTH & FITNESS, INC., 1500 S. 1000 W., LOGAN, UT 84321-9813

Part No. 160420 R1201A

Printed in USA © 2001 ICON Health & Fitness, Inc.

Download from Www.Somanuals.com. All Manuals Search And Download.

Free Manuals Download Website

http://myh66.com

http://usermanuals.us

http://www.somanuals.com

http://www.4manuals.cc

http://www.manual-lib.com

http://www.404manual.com

http://www.luxmanual.com

http://aubethermostatmanual.com

Golf course search by state

http://golfingnear.com

Email search by domain

http://emailbydomain.com

Auto manuals search

http://auto.somanuals.com

TV manuals search

http://tv.somanuals.com