Dimensional Data for 42XH72R

Indoor unit : XH4272R

Indoor unit : 4-Way Air Discharge Semi-concealed Type
36, 42Type

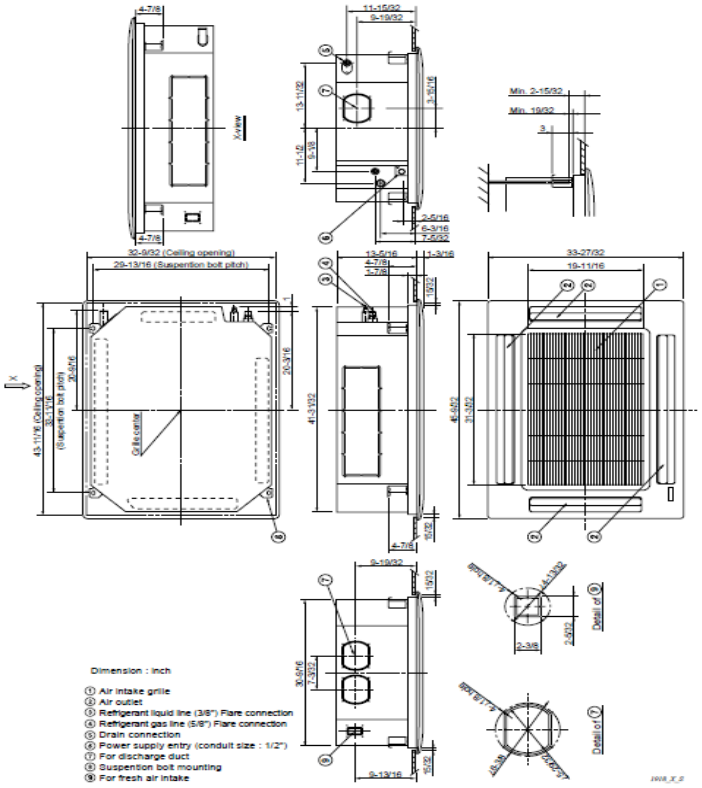

(B) Outdoor Unit: CH4272R, C4272R

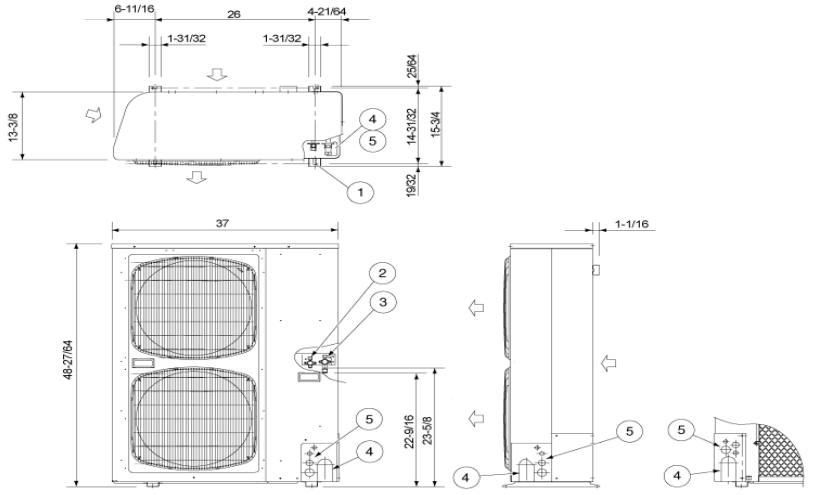

Dimension: inch

①	Hole for anchor bolt (4–R6.5) / Anchor bolt: M10
②	Refrigerant tube joint (liquid line tube) • Flare connection 3/8 in (9.52 mm)
③	Refrigerant tube joint (gas line tube) • Flare connection 5/8 in (15.88 mm)
④	Refrigerant tubing inlet (knock-out hole)
⑤	Power supply inlet (knock-out hole ϕ38, ϕ29, ϕ19, ϕ16 mm)

Download from Www.Somanuals.com. All Manuals Search And Download.

Free Manuals Download Website

http://myh66.com

http://usermanuals.us

http://www.somanuals.com

http://www.4manuals.cc

http://www.manual-lib.com

http://www.404manual.com

http://www.luxmanual.com

http://aubethermostatmanual.com

Golf course search by state

http://golfingnear.com

Email search by domain

http://emailbydomain.com

Auto manuals search

http://auto.somanuals.com

TV manuals search

http://tv.somanuals.com