SONY

2-663-710-**11**(2)

High Definition Digital Receiver DST-HD500

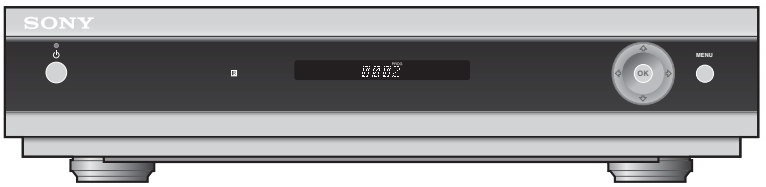

DVB®
Digital Video Broadcasting

Operating Guide

© 2005 Sony Corporation
Www.Somanuals.com. All Manuals Search And Download.

Safety Information

Please follow the precautions below to ensure the safety of your receiver is not compromised in any way.

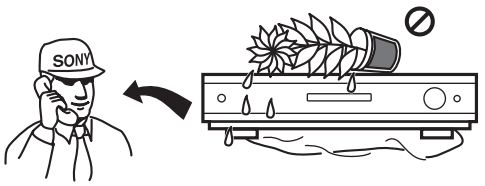

Never push objects of any kind into the receiver as this could result in a fire or electric shock. Never spill liquid of any kind onto the receiver. If any liquid or solid object does get into the receiver, switch off immediately and have it checked by qualified personnel.

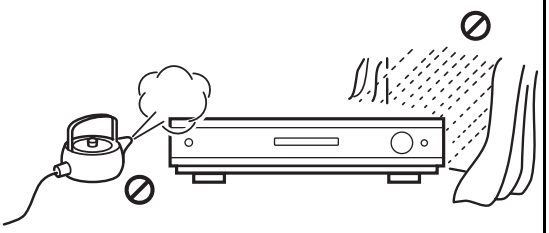

To prevent fire or shock hazard, do not expose the receiver to rain or moisture.

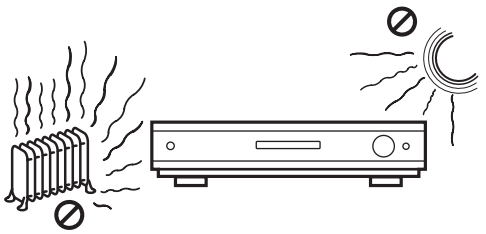

Never place the receiver in hot, humid or excessively dusty places. Do not install the receiver where it may be exposed to mechanical vibrations or electromagnetic radiation.

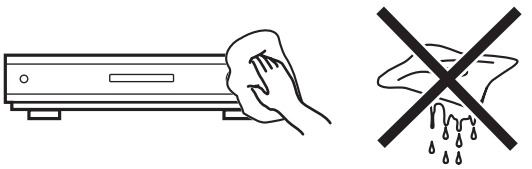

Clean the receiver with a soft, lightly dampened cloth. Do not use any type of abrasive pad, alkaline cleaner, scouring powder or solvent such as alcohol or benzine.

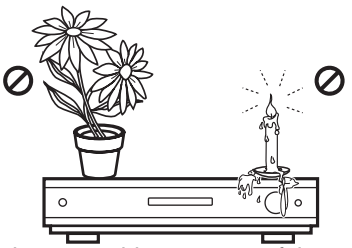

Do not place any objects on top of the receiver. To prevent fire, keep inflammable objects or naked flames (e.g. candles) away from the receiver.

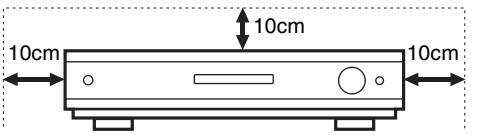

Do not cover the ventilation openings of the receiver with newspapers or curtains etc. For ventilation, leave a space of at least 10cm all around the receiver.

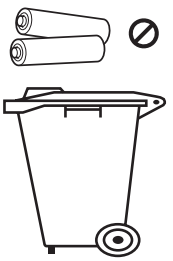

Remember to dispose of batteries in an environmentally friendly manner. Do not dispose in domestic waste containers.

Download from Www.Somanuals.com. All Manuals Search And Download.

Thank you for choosing this Sony product.

Before operating the receiver, please read this instruction manual thoroughly and retain it for future reference.

Safety information - 2

Accessories supplied - 4

Overview of the remote control - 5

Overview of the receiver - 6

Getting started - 7
- Connecting the receiver to a TV/display screen - 7
- Inserting batteries into the remote control - 11
- Easy Setup procedure - 11

Using the menu system - 12
- General operation - 12
- Program List - 12
- Favorite List - 12
- Install menu - 13
- Setup menu - 15

Other Features - 17
- Teletext - 17
- Picture In Picture (PIP) - 17
- Picture Freeze - 17
- Audio Select - 17
- i-Plate display - 17

Additional information - 18
- Connecting a VCR/DVD recorder - 18
- Connecting a Hi-Fi, Home Theatre, etc. - 20
- Using the remote control to operate other TVs - 21
- Specifications - 22
- Channels Available (as of July 2004) - 23
- Troubleshooting - 24
- Index - 25

Should you experience a problem with this receiver, please refer to the troubleshooting section on page 24. If you are unable to rectify the problem, contact the Sony Australia Helpline on **1300 13 SONY (7669).** Please ensure you have the following information before calling the helpline:

Date of purchase:	
Serial number:	
Model number:	**DST-HD500**
Post code:	
Detailed fault description:	
Hardware version:	
Software version:	

Note: You can check the Hardware and Software versions by using the menu system of this receiver. Page 12 explains how to access the menu, page 15 explains how to access the ‘Setup’ menu and page 16 explains how to display the Hardware and Software versions. (Information option).

The serial number is located on the rear of the receiver.

Download from Www.Somanuals.com. All Manuals Search And Download.

Accessories supplied

Remote control

RF cable

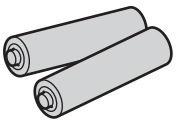

Batteries

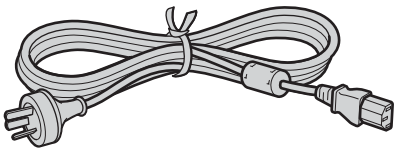

AC Cord

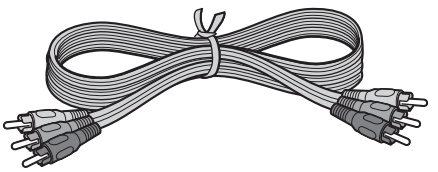

Y/Pb/Pr Cable

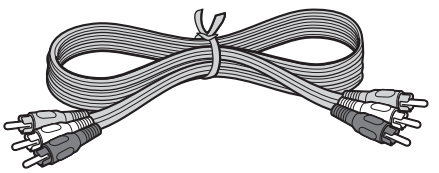

AV Cable

Download from Www.Somanuals.com. All Manuals Search And Download.

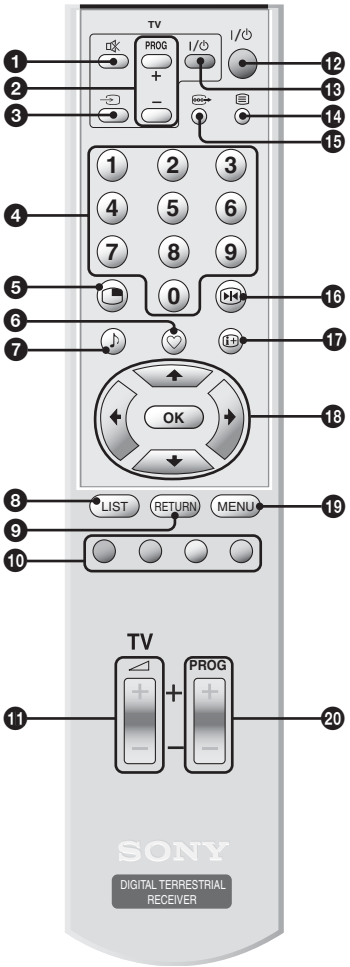

1 Mute button
Press to mute the sound on your TV. Press again to restore.
Note: This button will only work once you have configured the remote control to operate your brand of TV (refer to page 21).

2 TV PROG +/- buttons
Press to select the next or previous channel.
Note: This button will only work once you have configured the remote control to operate your brand of TV (refer to page 21).

3 Video Input button
Press to select signals from equipment connected to the TV set.
Note: This button will only work once you have configured the remote control to operate your brand of TV (refer to page 21) and may not be compatible with some Sony plasma displays.

4 Numbered Buttons
Press to enter a channel number, your password or a numeric entry in a menu.
Note: For channel numbers 10 and above, enter the remaining digits within 2 seconds.

5 Picture In Picture button
Press to display the 'PIP Program' menu (refer to page 17).

6 Favorite List button ♡
Press to display the Favorite List (refer to page 12).

7 Audio button ♪
Press to display the present audio status you are listening to, and press again to change to another audio output (refer to page 17).

8 LIST button
Press to display the Program List (refer to page 12).

9 RETURN button
Press this button to cancel a selection or to go back one step in a menu.

10 Coloured buttons
These buttons are used to select the coloured options available in some text displays.

11 Volume +/- button
Press to increase/decrease the TV volume level.
Note: These buttons only work once you have configured the remote control to operate your brand of TV (refer to page 21).

12 Standby button I/⏻
Press to switch off your receiver temporarily. Press again to resume normal operation.
Note: When the receiver is turned on, it takes a few seconds for the system to warm up. During this interval, 'DST-HD500' will be displayed in the front panel. Please wait until the image shows up on the screen.

13 TV standby button I/⏻
Press to switch off your TV temporarily. Press again to resume normal operation.
Note: This button will only work once you have configured the remote control to operate your brand of TV (refer to page 21).

14 Teletext button
Press to display teletext (refer to page 17).

15 Video Format button
Press to select the video format that best suits your display (refer to page 15).

16 Picture Freeze button
Press to freeze the picture. Press again to cancel the freeze. (refer to page 17).
Note: Sound will be muted when using the freeze function.

17 i-Plate display button
Press this button to display information about the current channel and program (refer to page 17).

18 Control pad
Use the ↑, ↓, ←, → and **OK** buttons to navigate through the menu system and store any changes you make.

19 MENU button
Press to enter the main menu.

20 PROG +/- button
Press to select the next or previous channel stored on your receiver.
Note: Once you have used the Favorite List to select and view a channel, pressing PROG +/- buttons will select only channels from your Favorite List. To cancel this, select a different channel using the Program List.

Download from Www.Somanuals.com. All Manuals Search And Download.

Front View

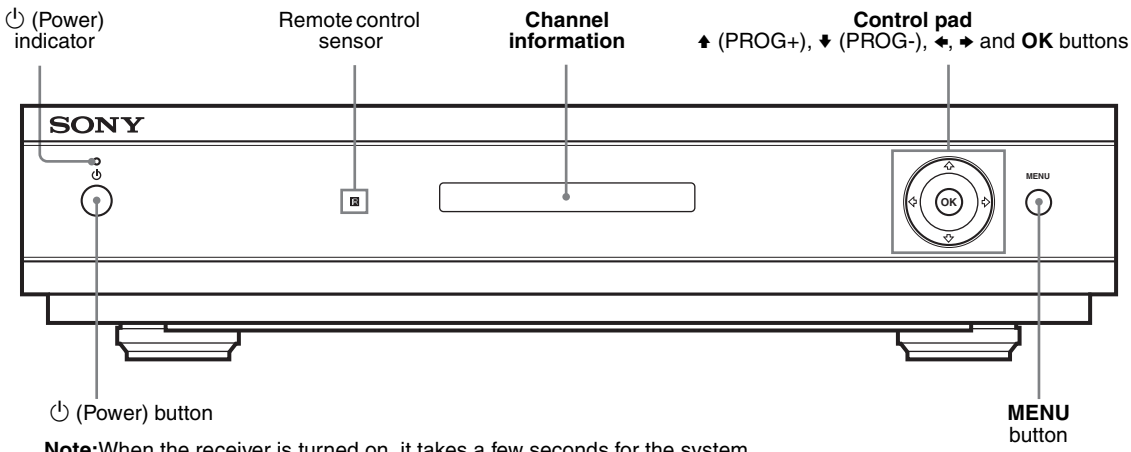

Note: When the receiver is turned on, it takes a few seconds for the system to warm up. During this interval, 'DST-HD500' will be displayed in the front panel. Please wait until the image shows up on the screen.

Rear View

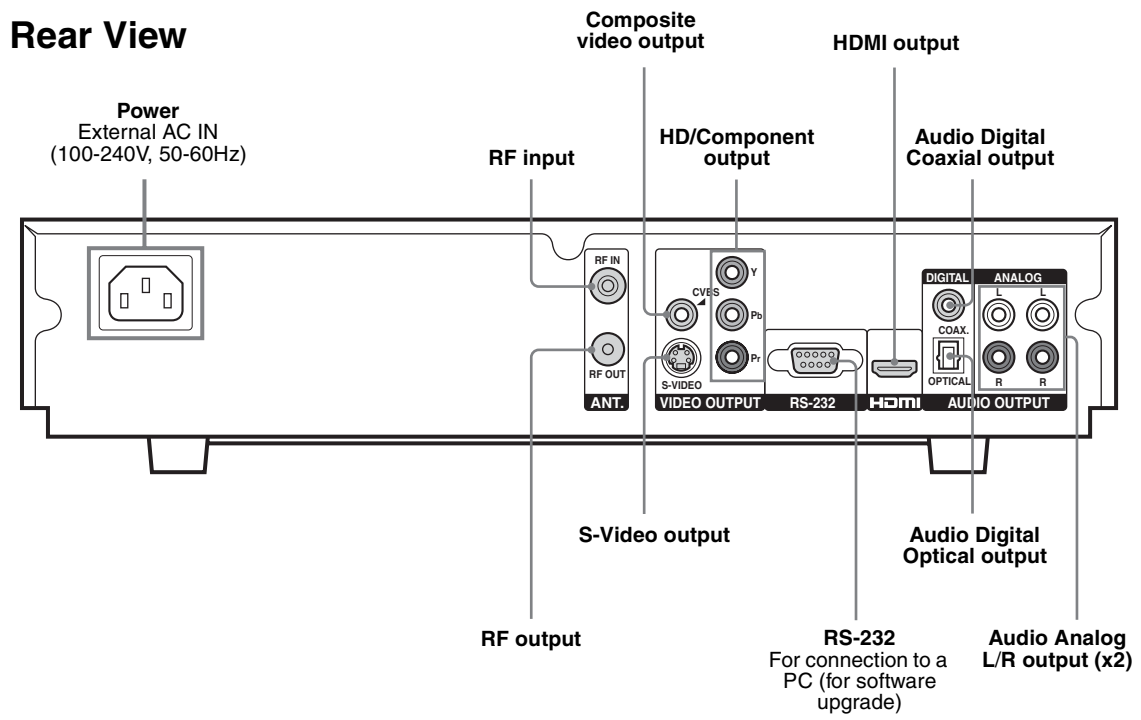

Download from Www.Somanuals.com. All Manuals Search And Download.

Connecting the receiver to a TV/display screen

Note: Before connecting, ensure all equipment is disconnected from the mains supply.

Connecting to an HD TV/display screen via HDMI

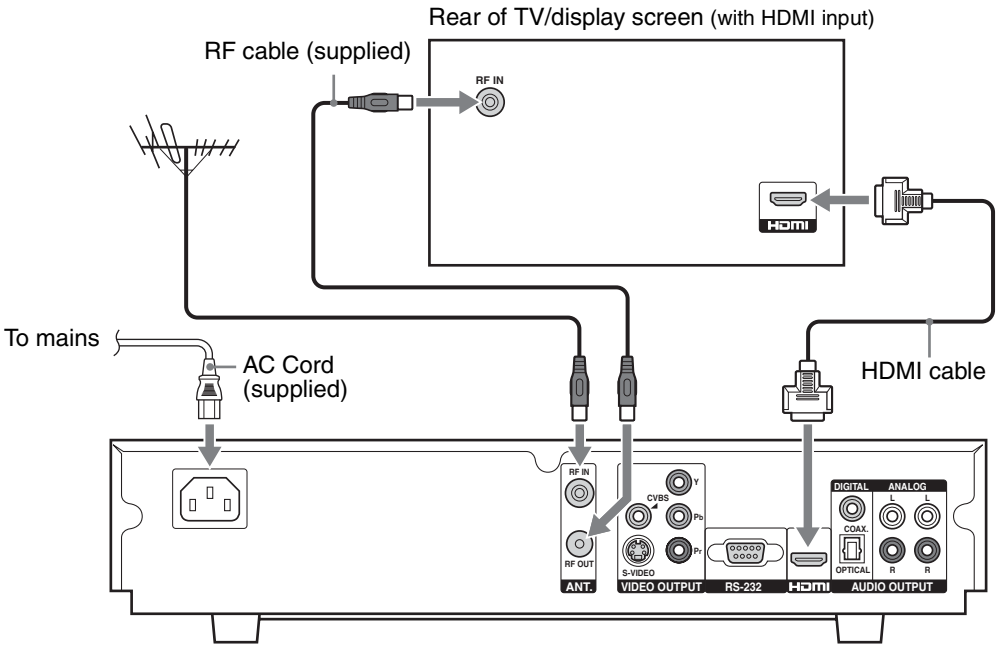

1 Connect your aerial cable to the socket labelled **RF IN** on the rear of the receiver.

2 Connect the supplied RF cable from the socket labelled **RF OUT** on the rear of the receiver to the aerial socket on your TV/display screen.

3 Connect an HDMI cable (not supplied) from the socket labelled **HDMI** on the rear of the receiver to the HDMI input socket on your TV/display screen. (When using an HDMI connection, it is not necessary to connect the AV cable.)

4 Connect the supplied AC cord from the AC IN socket on the rear of the receiver to your mains socket (100 - 240V AC, 50/60Hz).

Download from Www.Somanuals.com. All Manuals Search And Download.

Connecting to an HD TV/display screen via Component output

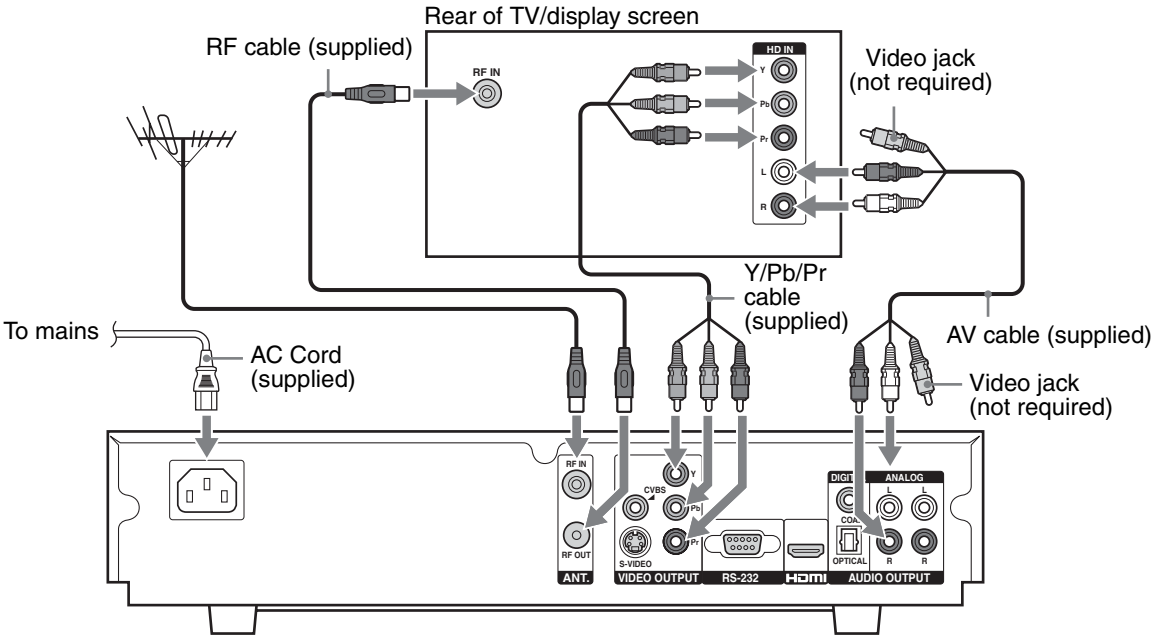

1 Connect your aerial cable to the socket labelled **RF IN** on the rear of the receiver.

2 Connect the supplied RF cable from the socket labelled **RF OUT** on the rear of the receiver to the aerial socket on your TV/display screen.

3 Connect the supplied Y/Pb/Pr cable from the sockets labelled **Y**, **PB** and **PR** on the rear of the receiver to the component input sockets on your TV/display screen.

4 Connect the supplied AV cable from the sockets labelled **L**, and **R** on the rear of the receiver to the audio input sockets on your TV/display screen. (The yellow video jack does not need to be connected.)

5 Connect the supplied AC cord from the AC IN socket on the rear of the receiver to your mains socket (100 - 240V AC, 50/60Hz).

Download from Www.Somanuals.com. All Manuals Search And Download.

Connecting to an SD TV/display screen via S-Video

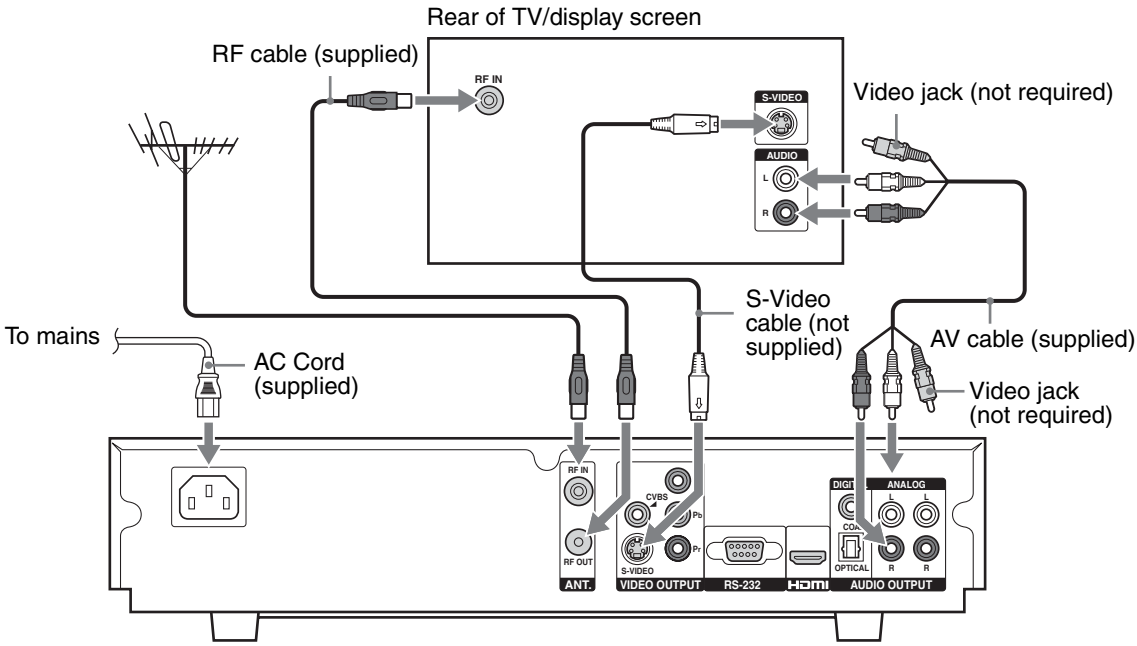

1 Connect your aerial cable to the socket labelled **RF IN** on the rear of the receiver.

2 Connect the supplied RF cable from the socket labelled **RF OUT** on the rear of the receiver to the aerial socket on your TV/display screen.

3 Connect an S-Video cable (not supplied) from the socket labelled **S-VIDEO** on the rear of the receiver to the S-Video input sockets on your TV/display screen.

4 Connect the supplied AV cable from the sockets labelled **L**, and **R** on the rear of the receiver to the audio input sockets on your TV/display screen. (The yellow video jack does not need to be connected.)

5 Connect the supplied AC cord from the AC IN socket on the rear of the receiver to your mains socket (100 - 240V AC, 50/60Hz).

Download from Www.Somanuals.com. All Manuals Search And Download.

Connecting to an SD TV/display screen via Composite Video

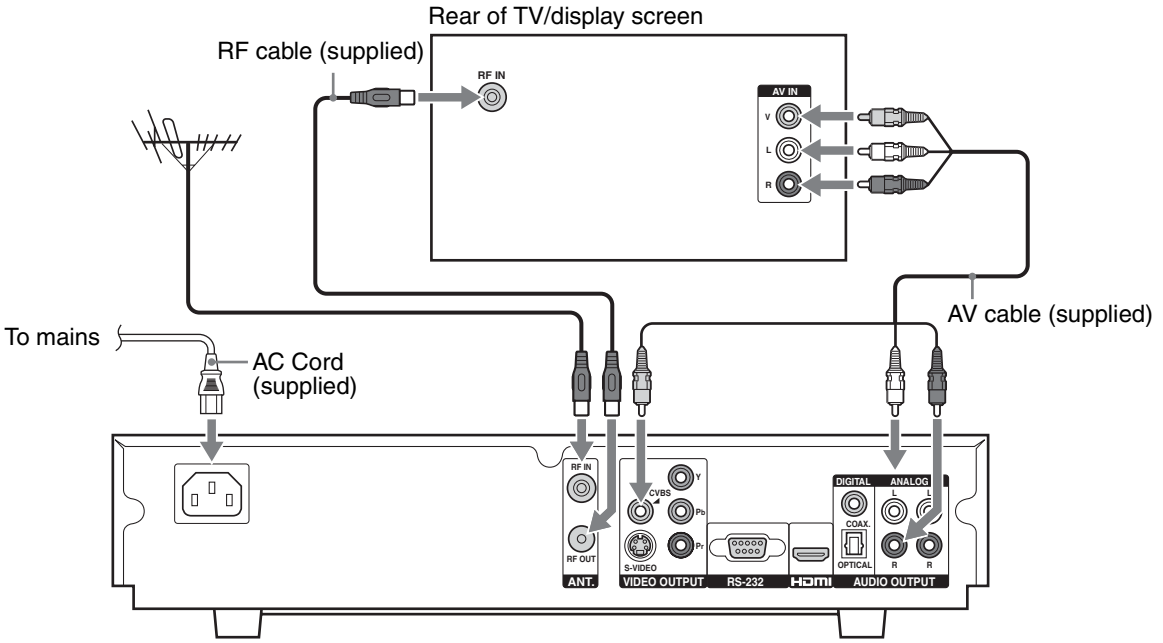

1 Connect your aerial cable to the socket labelled **RF IN** on the rear of the receiver.

2 Connect the supplied RF cable from the socket labelled **RF OUT** on the rear of the receiver to the aerial socket on your TV/display screen.

3 Connect the supplied AV cable from the sockets labelled **CVBS**, **L**, and **R** on the rear of the receiver to the audio/video input sockets on your TV/display screen.

4 Connect the supplied AC cord from the AC IN socket on the rear of the receiver to your mains socket (100 - 240V AC, 50/60Hz).

Download from Www.Somanuals.com. All Manuals Search And Download.

Inserting batteries into the remote control

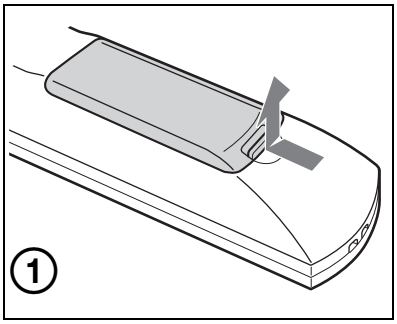

Push and lift up the release clip to remove the battery cover.

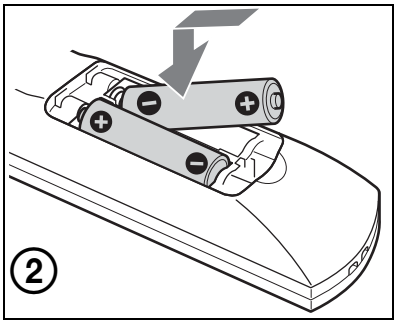

Insert the supplied batteries as indicated inside the battery compartment.

Easy Setup procedure

Easy Setup screen

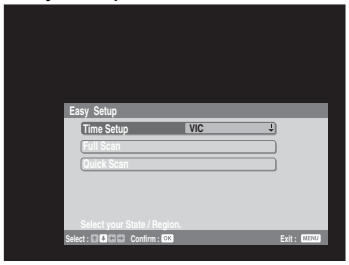

1 Press the ⏻ (Power) button on the front of the receiver. When the receiver is switched on for the first time, the 'Easy Setup' screen is displayed.

2 With the **Time Setup** option highlighted, press the ➡ or **OK** button. Then press the ⬆ or ⬇ buttons to select your state/region.
Note: This option allows you to set the time zone in which you are using the receiver. This will ensure that the time displayed on the i-Plate is correct.

3 Press the ⬆ or ⬇ buttons to highlight **Full Scan** or **Quick Scan** to preset channels.

'Full Scan' All available channels are tuned and stored. This procedure may take up to 15 minutes.

'Quick Scan' All expected channels in your area are tuned and stored. You will need to select your nearest city to help speed up this procedure.

Press the **OK** button to begin the autotune procedure. A display appears showing a tuning progress bar and the channels found.

4 When autotune procedure has finished, the **Program List** is displayed, showing all the available channels.

Press the **OK** button to remove the **Program List** and view the first channel captured.

Alternatively, press the ⬇ button to select a different channel. Press the **OK** button to remove the **Program List** and view the selected channel.

If no channels are found

1 If no channels have been captured and stored, a message appears on screen to inform you.

2 Check your aerial cable is connected, then press the **MENU** button and select **Install** menu to repeat the autotune procedure.

3 If you are still unable to receive signals, please have your aerial checked by an aerial installation company.

Download from Www.Somanuals.com. All Manuals Search And Download.

Using the menu system

General operation

All the menus of this receiver are accessed by pressing the **MENU** button on the remote control or the front panel.

1 Use the following buttons to operate the menu:
- Press the ▲ or ▼ button to highlight the required option.
- Press the **OK** or ► button to enter the option.
- Press the ▲, ▼, ◄ and ► buttons to alter settings.
- Press the **OK** button to store each change you make,
- or press the **RETURN** button to cancel.

2 Press the **RETURN** button to go back one step or press the **MENU** button to return to normal operation.

Most menu screens will automatically disappear after 90 seconds with no buttons being pressed.

Program List

The **Program List** is a list of the available channels.

Program List

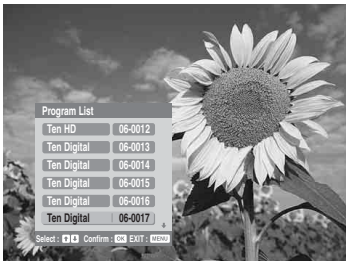

1 Press the **MENU** button to display the menu system.

2 With the symbol highlighted, press the ► or **OK** button to display the **Program List**.

3 Press the ▲ or ▼ buttons to highlight the required channel.

4 Press the **OK** button to exit the **Program List** and display the selected channel.

Alternatively, in normal operation, press the **LIST** button on the remote control to display the 'Program List'.

Favorite List

The **Favorite List** allows you to store your favorite channels in a list for easy access.

Favorite List

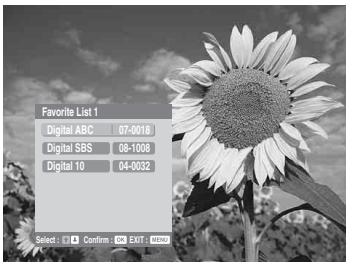

To watch a Favorite channel

1 Press the **MENU** button to display the menu system.

2 With the ♡ symbol highlighted, press the ▲ or ▼ buttons to highlight **Favorite List 1** or **Favorite List 2**. Press the ► or **OK** buttons to display the **Favorite List**.

3 Press the ▲ or ▼ buttons to highlight your favorite channel.

4 Press the **OK** button to exit the **Favorite List** and display the selected channel.

Once you have used the **Favorite List** to select and view a channel, pressing the **PROG +/-** buttons will select only channels from your **Favorite List**. To cancel this, select a different channel using the **Program List**.

Alternatively, in normal operation, press the ♡ button on the remote control to cycle through 'Favorite List 1', 'Favorite List 2' and exit from the Favorite List.

Download from Www.Somanuals.com. All Manuals Search And Download.

Install menu

Install menu

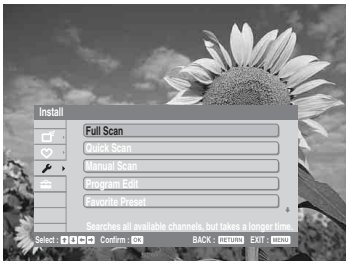

The **Install** menu allows you to tune in new channels automatically or manually, and set a parental rating for programs.

1 Press the **MENU** button to display the menu system.

2 Press the ↓ button to highlight the 🔧 symbol. Press the → or **OK** button to display the **Install** menu.

Full Scan
All the available channels were captured and stored when the receiver was first installed. This option allows you to repeat that process, searching for all available channels.

With the **Full Scan** option highlighted, press the → or **OK** button to scan. For further instructions, please refer to the 'Easy Setup procedure' on page 11.

Quick Scan
All the available channels were captured and stored when the receiver was first installed. This option allows you to repeat that process, searching for all the expected channels in your area.

With the **Quick Scan** option highlighted, press the → or **OK** button to scan. For further instructions, please refer to the 'Easy Setup procedure' on page 11.

Manual Scan
This option allows you to manually capture and store channels. Due to the technical nature of the settings, it is recommended that only experienced service personnel use this option.

Program Edit
This option allows you to edit the program list.

With the **Program Edit** option highlighted, press the → or **OK** button to confirm. Press the ↑ or ↓ button to highlight the required setting (refer to table below). Press the **OK** button to confirm.

Skip	This option allows you to skip unwanted programs as you move through the channels by pressing **PROG +/-** buttons. With the **Skip** option highlighted, press the → or **OK** button to confirm. Press the ↑ or ↓ buttons to highlight the program to be skipped, then press the **OK** button. Press the ↑ or ↓ button to 'On'. To cancel the skip channel, set it back to 'Off'. Press the **OK** button to confirm.
Program Sorting	This option allows you to set the program list sequence to your preference. With the **Program Sorting** option highlighted, press the → or **OK** button to confirm. Press the ↑ or ↓ buttons to highlight the program you want to move and press the **OK** button. Press the ↑ or ↓ buttons to shift it to the new position. Press the **OK** button to confirm.

Favorite Preset
This option allows you to preset **Favorite List 1** and **Favorite List 2**.

With the **Favorite Preset** option highlighted, press the → or **OK** button. Press the ↑ or ↓ button to choose **Favorite List 1** or **Favorite List 2**.

Setting favorite programs will give you easier access to the programs you view most often.
In **Favorite List 1** or **Favorite List 2**, press the ↑ or ↓ buttons to highlight the desired number, and then press the **OK** button. Press the ↑ or ↓ buttons to choose the program you want to allocate. Press the **OK** button to confirm.

continued...

Download from Www.Somanuals.com. All Manuals Search And Download.

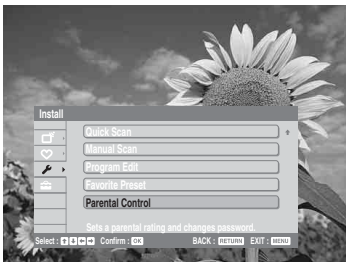

Parental Control
This option allows you to set a parental guidance level. Programs that exceed the set level can only be viewed after entering the correct password.
With the **Parental Control** option highlighted, press the ➔ or **OK** button. You will need to enter your password to access this menu. The password is initially set to '0000'. For better security, the password can be changed in the 'Change Password' option. Enter your password as requested using the **Numbered** buttons on the remote control. Press the ▲ or ▼ buttons to highlight the required setting (refer to the following options). Press the **OK** button to confirm.

Parental Rating
With the **Parental Rating** option highlighted, press the ➔ or **OK** button to adjust. Press the ▲ or ▼ buttons to highlight the required setting (refer to the table below). Press the **OK** button to confirm.

Block All	All programs need a password to view.
Block G and above	To lock 'General' and above programs.
Block PG and above	To lock 'Parental Guidance' and above programs.
Block M and above	To lock 'Mature' and above programs.
Block MA and above	To lock 'Mature Adult' and above programs.
Block AV and above	To lock 'Adult/Violence' and above programs.
Block R and above	To lock 'Restricted' and above programs.
No Block (default setting)	No programs need a password to view.

Change Password
This option allows you to change the default password (0000) to a more memorable one.

With the **Change Password** option highlighted, press the ➔ or **OK** button to adjust. Enter the new password using the **Numbered** buttons on the remote control. Enter the new password again.

Download from Www.Somanuals.com. All Manuals Search And Download.

Setup menu

The **Setup** menu allows you change various settings.

Setup menu

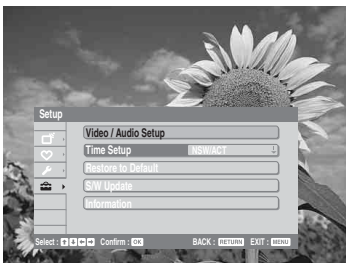

16:9 (Full Screen)

4:3 (Full Screen Crop)

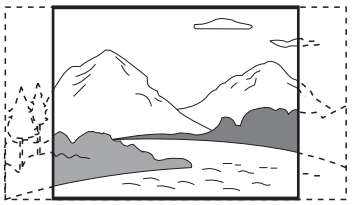

4:3 (Letter Box)

1 Press the **MENU** button to display the menu system.

2 Press the ↓ button to highlight the 🧰 symbol. Press the → or **OK** button to display the **Setup** menu.

Video/Audio Setup
This option enables you to enjoy video and audio in various environments.

With the **Video/Audio Setup** option highlighted, press the → or **OK** button to adjust. Press the ↑ or ↓ buttons to highlight the required setting (refer to table below). Press the **OK** button to adjust.

Video Format	This option allows you to set the picture quality. With the **Video Format** option highlighted, press the → or **OK** button to adjust. Press the ↑ or ↓ buttons to '1080i', '720p', '576p' or '576i'. Press the **OK** button to confirm. **Note:** If you have a high definition screen we recommend that you select the '1080i' setting. If you have a standard definition screen it is likely that the '576i' setting is the only setting suitable for your display. Please check the specification of your TV or display screen by referring to the manufacturer's instruction manual. Alternatively, in normal operation, press the ⟳ button on the remote control to cycle through all the settings until the best quality display is seen. **Note:**When the video format is changed, the picture might be slightly disturbed during the transition between video formats. This does not indicate a malfunction.
Aspect Ratio	This option allows you to set the aspect ratio. With the **Aspect Ratio** option highlighted, press the → or **OK** button to adjust. Press the ↑ or ↓ buttons to '16:9 (Full Screen)', '4:3 (Full Screen Crop)', or '4:3 (Letter Box)'. Press the **OK** button to confirm. **Note:** '16:9 (Full Screen)' is for use with a widescreen TV/display screen. '4:3 (Full Screen Crop) is for use with a non-widescreen TV/display screen. The picture is stretched to fill the screen. As a result, some of the picture may not be visible. '4:3 (Letter Box) is for use with a non-widescreen TV/display screen. The full picture is shown with black bars at the top and bottom of the picture.
Audio Output Control	This option allows you to set the priority for audio output (when Dolby Digital and MPEG audio are available). With the **Audio Output Control** option highlighted, press the → or **OK** button to adjust. Press the ↑ or ↓ buttons to 'Dolby Digital', or 'MPEG'. Press the **OK** button to confirm.
MPEG Volume Control	This option allows you to adjust MPEG audio level to Dolby Digital audio level. With the **MPEG Volume Control** option highlighted, press the → or **OK** button. Press the ← or → buttons to adjust the audio level. Press the **OK** button to confirm.

continued...

Download from Www.Somanuals.com. All Manuals Search And Download.

Time Setup
This option allows you to set the time zone in which you are using the receiver. This will ensure that the time displayed on the i-Plate is correct.

With the **Time Setup** option highlighted, press the → or **OK** button to adjust. Press the ↑ or ↓ buttons to highlight the required setting. Press the **OK** button to confirm.

Restore to Default
This option allows you to reset all the settings to factory default. It is recommended that you only use this option when you move to a new area.

With the **Restore to Default** option highlighted, press the → or **OK** button to adjust. Press the ← or → buttons to highlight 'Yes'. Press the **OK** button to confirm. Once the receiver has restarted, you will need to perform the initial tuning setup procedure (refer to page 11).

S/W Update
This option allows the software in your receiver to be upgraded. It is recommended that this is performed **ONLY** by experienced Sony service personnel. Please contact your local Sony service centre for details on this option.

Information
This option displays the receiver's current hardware and software versions. You may be asked to quote these details when contacting your local Sony service centre.

With the **Information** option highlighted, press the → or **OK** button to display the current hardware and software versions. Press the **RETURN** button to cancel.

Download from Www.Somanuals.com. All Manuals Search And Download.

Teletext

If the broadcast program contains teletext, the icon is displayed on the i-Plate display (see below). Press the button to display the teletext. You can now use the teletext service in the same way as if using a traditional analogue TV.

Picture In Picture (PIP)

This feature allows you to view a different sub-channel in a window and also access multiview services (when available from broadcaster, e.g different camera angles).

Press the button to display the **PIP** menu. Press the ▲ or ▼ buttons to select the required channel/multiview service. Press the **OK** button to confirm.

Note: Depending on the broadcast signal, the image displayed on the PIP sub screen may be smaller than its frame size.

To remove the PIP:

Press the button to display the **PIP** menu. Press the ▲ or ▼ buttons to select 'PIP OFF'. Press the **OK** button to confirm.

Picture Freeze

This feature allows you to freeze the screen (e.g. to make a note of a telephone number). Press the button to freeze the picture. Press again to cancel the freeze (the picture quickly catches up with the broadcast).

Note: Sound will be muted when using the freeze function.

Audio Select

This feature allows you to select which language or audio type to listen to (when available from broadcaster). Press the ♪ button to display the present audio status you are listening and press the ♪ button again to change other audio output.

i-Plate display

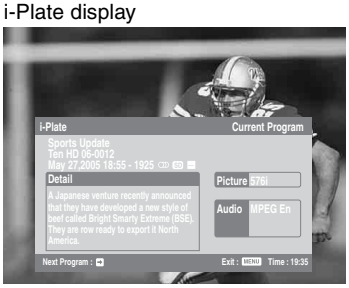

i-Plate display

This feature gives you information on the current channel and also the current and next programs. Press the button to display the i-Plate. This shows the date, time, whether the channel has teletext, whether multi (MPEG and Dolby Digital) audio program available and whether the picture is available in high definition or standard definition (HD or SD is displayed).

Press the ➔ button to display information on the following program.

Press the button again (or the **MENU** button) to return to normal operation.

The following icons may be displayed on the i-Plate display according to the program.

SD: SD (or HD) : Parental rating : multi audio program
: Teletext

Note: The code coming after MPEG determines the language type.

Code	Language	Code	Language	Code	Language	Code	Language
Af	Afrikaans	El	Greek	Ita	Italian	Spa	Spanish
Afr	Afrikaans	Ell	Greek	Jpn	Japanese	Tam	Tamil
Ar	Arabic	En	English	Kan	Kannada	Tel	Telugu
Ara	Arabic	Eng	English	Kor	Korean	Zho	Chinese
Aus	Australian	Fr	French	Mal	Malayalam	U1	Unknown 1
Ben	Bengali	Fra	French	Nl	Dutch	U2	Unknown 2
Bn	Bengali	Fre	French	Nld	Dutch		
Chi	Chinese	Gem	German	Pan	Panjabi		
De	German	Ger	German	Por	Portuguese		
Deu	German	Gre	Greek	Raj	Rajasthani		
Dut	Dutch	Hi	Hindi	Rus	Russian		
Egy	Egyptian	Hin	Hindi	San	Sanskrit		

Download from Www.Somanuals.com. All Manuals Search And Download.

Additional Information

Connecting a VCR/DVD recorder

Note: Before connecting, ensure all equipment is disconnected from the mains supply.

Connecting to an HD VCR/DVD recorder

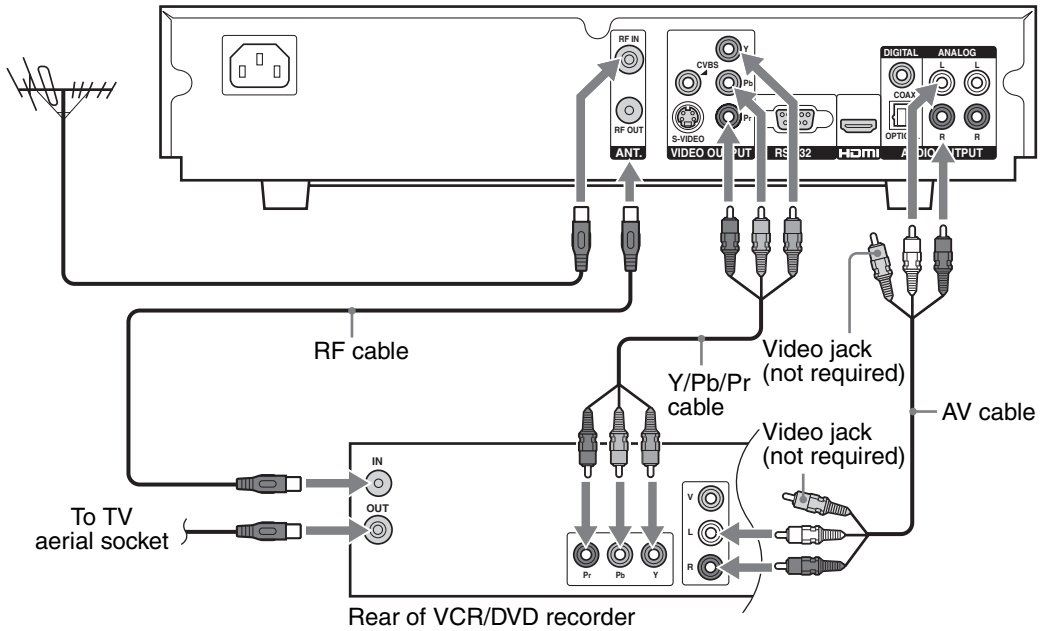

Connecting to an S-Video VCR/DVD recorder

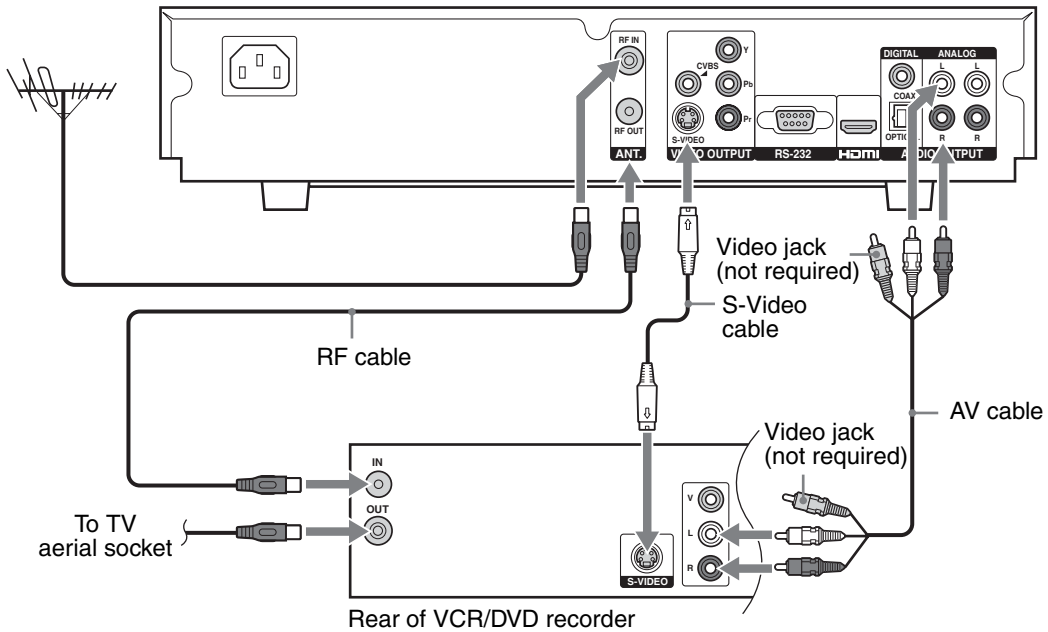

Download from Www.Somanuals.com. All Manuals Search And Download.

Connecting to a Composite VCR/DVD recorder

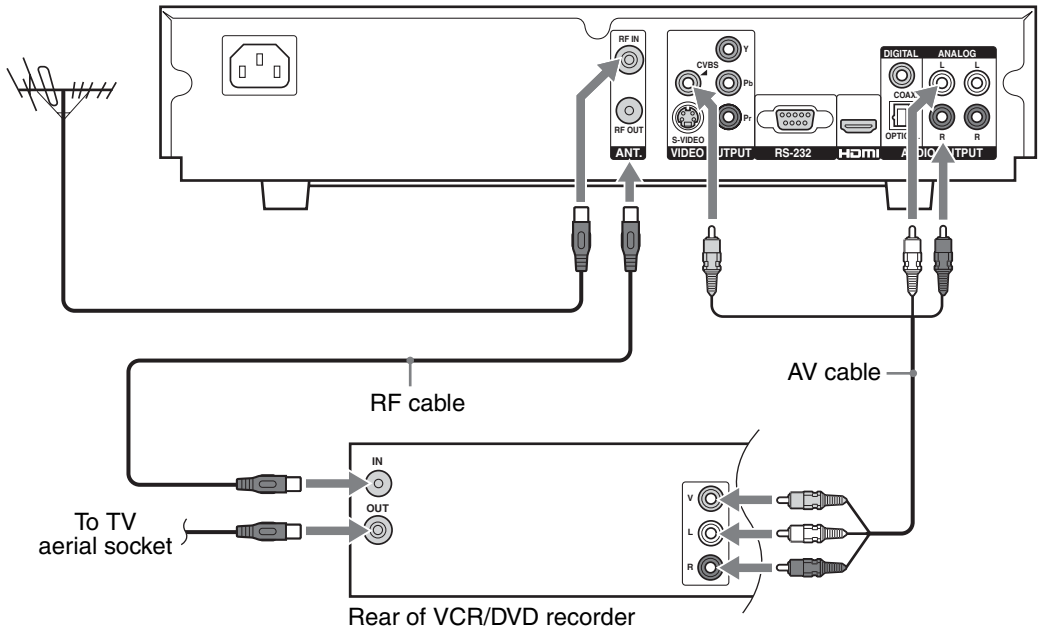

Download from Www.Somanuals.com. All Manuals Search And Download.

Additional Information

Connecting a Hi-Fi, Home Theatre, etc.

Notes on connecting Hi-Fi equipment: This receiver can be connected to your Hi-Fi using either a digital optical cable or an audio cable (stereo/mono).

Before connecting, ensure all equipment is disconnected from the mains supply.

Connecting to a Hi-Fi, Home Theatre, etc. via Optical output or Coaxial output

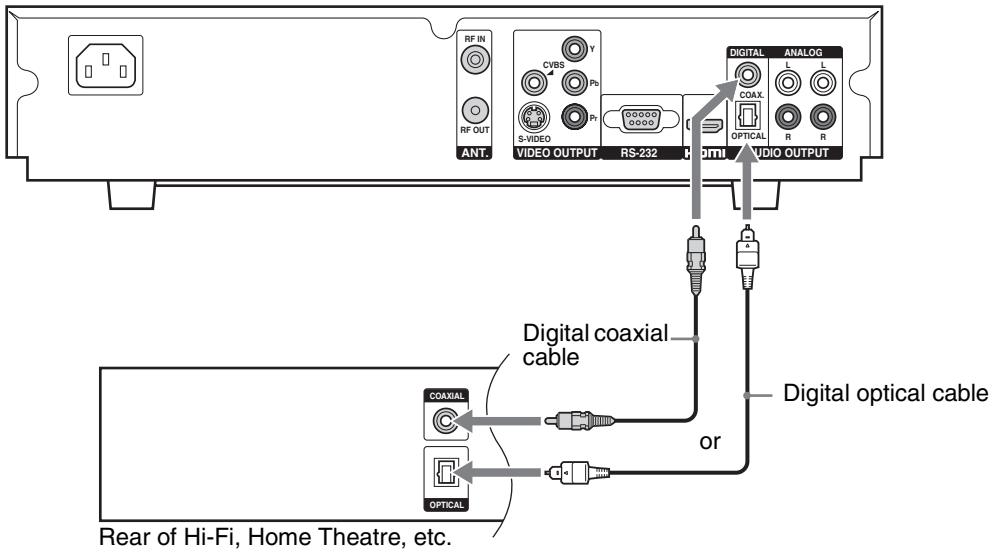

Connecting to a Hi-Fi, Home Theatre, etc. via audio cable

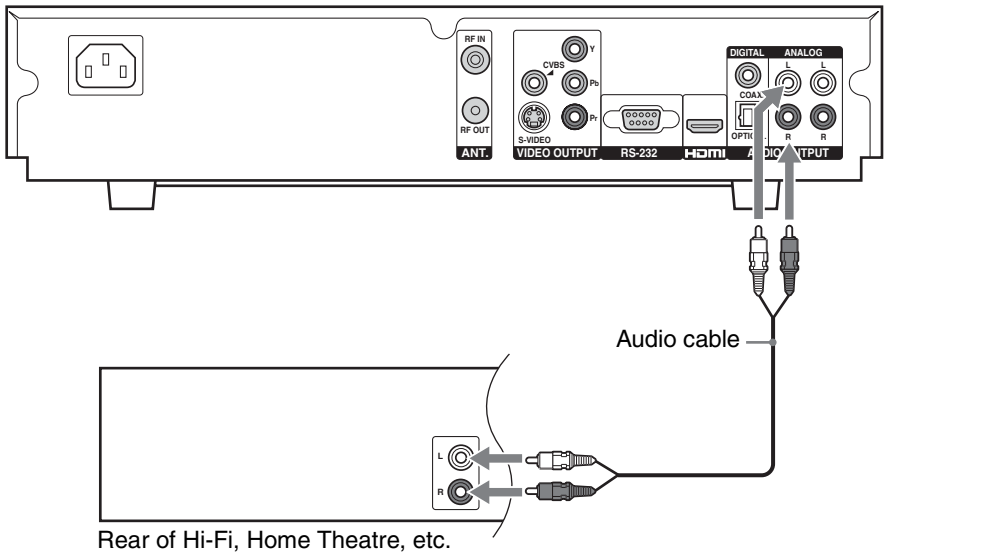

Download from Www.Somanuals.com. All Manuals Search And Download.

Using the remote control to operate other TVs

The remote control supplied with your receiver can be programmed to operate TVs made by other manufacturers. The following instructions guide you through the set up procedure.

1 Find the three-digit code for your brand of TV from the list below.

2 Whilst holding down the **TV I/⏻** button on the remote control, enter the three-digit code using the **Numbered** buttons.

3 Press the **OK** button to store, then release the **TV I/⏻** button.

4 Turn on your TV and check that the remote control operates the main functions. If not, repeat steps 2 - 3 and enter the next three-digit code allocated to your brand of TV.

Notes: If your TV is not listed below it is not supported by this remote control. The brand code you set may be lost if weak batteries are not replaced immediately. Should this happen, use the above procedure to re-enter the code. Even if your TV is listed in the table below, in some instances you may not be able to operate all of the available TV functions.

Brand	Code	Brand	Code
Aiwa	036, 055	Mitsubishi	045
Akai	059, 060, 062, 063, 064, 065, 066, 067, 068	Mivar	029, 106
Beijing	022	NEC	020, 053, 058, 063, 094, 097
Blaupunkt	071	Noblex	022
CGE	046, 106	Nokia	031, 059, 097
Daewoo	017, 037, 069	Onwa	023, 024, 025
Ferguson	027, 061, 073	Panasonic	011, 098, 099
Finlux	030	Peony	034, 038, 039
Funai	032, 054, 056, 057, 120	Philco	010, 017, 021, 115
Goldstar	018, 063, 068, 075	Philips	046, 078, 097, 100
Gradiente	015, 020	Pioneer	052, 119, 158, 159
Grundig	019, 071, 072, 076, 106	Saba	061
Hitachi	010, 047. 058, 064, 075, 077, 078, 079, 080, 082	Samsung	012, 033, 034, 035, 059, 063, 064, 067, 121
ITT	028, 059, 107, 083	Sanyo	013, 016, 049, 050, 059, 063, 067, 118
Jinxing	038	Sears	013
JVC	007, 023, 024, 025, 042, 058, 060, 065, 073	Sharp	006, 051, 058
Konka	040, 037, 088, 093, 095	Sony	001, 002, 003
LG	018, 063, 068, 075, 121	TCL	041
Loewe	084	Thomson	026, 061
Magnavox	046, 081	Toshiba	008, 014, 048, 058, 062, 072, 104, 118
Matsui	058, 059, 060, 061, 062, 063, 064, 071, 076, 086, 087, 089, 090, 091, 092, 096	Zenith	009
Matsushita	043, 044		

Download from Www.Somanuals.com. All Manuals Search And Download.

Additional Information

Specifications

Compliant Standard
DVB-T, MPEG-2

RF Input

Frequency:	51-858MHz
Loop Through:	51-858MHz
Bandwidth:	6/7/8 MHz
Connector:	IEC-Female
Demodulator:	COFDM
FFT Mode:	2K,8K
Constellation:	QPSK, 16QAM, 64QAM
Guard Interval:	1/4,1/8,1/16,1/32
Inner Coding Rate:	1/2,2/3,3/4,5/6,7/8

Video

Formats:	MP@ML, MP@HL
Aspect Ratio:	4:3, 16:9
Picture Resolution:	1920 x 1080i, 1280 x 720p, 720 x 576p, PAL: 720 x 576i

Output Connector

Composite:	RCA jack
Component (Y/Pb/Pr):	RCA jacks
S-Video:	Mini Din
HDMI	HDMI jack

Audio

Formats:	Dolby Digital, MPEG (I and II)
Output Connector:	SPDIF, Coaxial Digital, RCA jacks

Data

Serial Data Port:	RS-232

OSD

Number of Colours:	>256

Application System Resources

CPU:	306MIPS
RAM Memory:	64 MB SDRAM
Flash Memory:	2 MB

Power Supply

Input Voltage:	100-240V AC, 50/60Hz
Consumption (max.):	18W

Dimensions

Size (W x D x H):	Approx. 360 x 270 x 80mm
Weight:	Approx. 2.8kg

Environmental Data

Operating Temperature:	5 - 40ºC
Storage Temperature:	-40 - 65ºC

Supplied Accessories
Remote Control, type RM-X1022 (1)
AA size batteries (2)
RF Cable (1)
AC Cord (1)
AV Cable (1)
Y/Pb/Pr Cable (1)

Design and specifications are subject to change without notice

DVB®
Digital Video Broadcasting

Download from Www.Somanuals.com. All Manuals Search And Download.

Channels Available (as of July 2004)

For updated information, please refer to www.dba.org.au or contact you local Sony service centre.

City	Identifier	Channel and Middle Frequency	Transmitter Location	Start Date
Adelaide	Digital 7	VHF 6 - 177.5MHz	Mt Lofty	1/1/2001
	Digital 9	VHF 8 - 191.625MHz	Main Transmitter - Mt Lofty	1/1/2001
	Digital 10	VHF 11 - 219.5MHz	Main Transmitter - Mt Lofty	1/1/2001
	Digital ABC	VHF 12 - 226.5MHz	Main Transmitter - Crafers	1/1/2001
	Digital SBS	UHF 33 - 564.5MHz	Main Transmitter - Mt Lofty	1/1/2001
Brisbane	Digital 7	VHF 6 - 177.5MHz	Main Transmitter - Mt Coot-tha	1/1/2001
	Digital 9	VHF 8 - 191.625MHz	Main Transmitter - Mt Coot-tha	1/1/2001
	Digital 10	VHF 11 - 219.5MHz	Main Transmitter - Mt Coot-tha	1/1/2001
	Digital ABC	VHF 12 - 226.5MHz	Main Transmitter - Mt Coot-tha	1/1/2001
	Digital SBS	UHF 36 - 585.5MHz	Main Transmitter - Mt Coot-tha	1/1/2001
Melbourne	Digital 7	VHF 6 - 177.5MHz	Main Transmitter - Mt Dandenong	1/1/2001
	Digital 9	VHF 8 - 191.625MHz	Main Transmitter - Mt Dandenong	1/1/2001
	Digital 10	VHF 11 - 219.5MHz	Main Transmitter - Mt Dandenong	1/1/2001
	Digital ABC	VHF 12 - 226.5MHz	Main Transmitter - Mt Dandenong	1/1/2001
	Digital SBS	UHF 29 - 536.5MHz	Main Transmitter - Mt Dandenong	1/1/2001
Perth	Digital 7	VHF 6 - 177.5MHz	Main Transmitter - Bickley	1/1/2001
	Digital 9	VHF 8 - 191.625MHz	Main Transmitter - Walliston	1/1/2001
	Digital 10	VHF 11 - 219.5MHz	Main Transmitter - Carmel	1/1/2001
	Digital ABC	VHF 12 - 226.5MHz	Main Transmitter - Bickley	1/1/2001
	Digital SBS	UHF 29 - 536.5MHz	Main Transmitter - Bickley	1/1/2001
Sydney	Digital 7	VHF 6 - 177.5MHz	Main Transmitter - Artarmon	1/1/2001
	Digital 9	VHF 8 - 191.625MHz	Main Transmitter - Willoughby	1/1/2001
	Digital 10	VHF 11 - 219.5MHz	Main Transmitter - Artarmon	1/1/2001
	Digital ABC	VHF 12 - 226.5MHz	Main Transmitter - Gore Hill	1/1/2001
	Digital SBS	UHF 34 - 571.5MHz	Main Transmitter - Gore Hill	1/1/2001
Batchelor	QQQ -51	UHF 50 - 683.5MHz		
	SBS -54	UHF 53 - 704.5MHz		
	ABD -69	UHF 56 - 725.5MHz		
	NTD -60	UHF 59 - 746.5MHz		
	TND -63	UHF 62 - 767.5MHz		
	IMP -66	UHF 65 - 788.5MHz		
Canberra	CTC -7	VHF 6 -177.5MHz	Telstra Tower Black Mountain	30/6/2002
	ABC -9	VHF 9A - 205.5MHz	Telstra Tower Black Mountain	30/6/2002
	WIN -31	VHF 11 - 219.5MHz	Telstra Tower Black Mountain	30/6/2002
	CBN -34	VHF 12 - 226.5MHz	Telstra Tower Black Mountain	30/6/2002
	SBS -28	VHF 30 - 543.5MHz	Telstra Tower Black Mountain	30/6/2002
Darwin	SBS -28	UHF 29 - 536.5MHz	Deloraine Rd	30/6/2002
	ABD -6	UHF 30 - 543.5MHz	Deloraine Rd	30/6/2002
	NTD -8	UHF 31 - 550.5MHz	Deloraine Rd	30/6/2002
	TND -34	UHF 32 - 557.5MHz	Deloraine Rd	30/6/2002
Newcastle	NBN -3	UHF 36 - 585.5MHz	Mt Sugarloaf	30/6/2001
	NEN -54	UHF 53 - 704.5MHz	Broadcast Site Mt Sugarloaf Range	30/6/2001
	NRN -57	UHF 51 - 690.5MHz	Broadcast Site Mt Sugarloaf Range	30/6/2001
	ABHN -5A/4B	UHF 37 - 592.5MHz	Mt Sugarloaf	30/6/2001
	SBS -45	UHF 38 - 599.5MHz	Mt Sugarloaf	30/6/2001
Wollongong	WIN -59	UHF 36 - 585.5MHz	WIN Tower Knights Hill	30/6/2002
	CTC -62	UHF 37 - 592.5MHz	NTL Tower Knights Hill	30/6/2002
	CBN -65	UHF 38 - 599.5MHz	WIN Tower Knights Hill	30/6/2002
	ABWN -56	UHF 51 - 690.5MHz	NTL Tower Knights Hill	30/6/2002
	SBS -53	UHF 54 - 711.625MHz	NTL Tower Knights Hill	

Download from Www.Somanuals.com. All Manuals Search And Download.

Additional Information

Troubleshooting

Problem	Solution
(1) The receiver front panel power indicator doesn't light up, and no message on the front panel.	(a) Check the mains lead and make sure it is connected to a stable power outlet. (b) Check if the set top box is in 'Standby' mode by pressing the **I/⏻** (Standby) button on the remote control.
(2) Has message on the front panel but no picture on your TV screen.	(a) Press the **MENU** button on the remote control or front panel to call up the On Screen Display. (b) Make sure the connector type between the set top box and your TV set matches each other. (c) Check the brightness level of your TV screen.
(3) Poor picture quality.	(a) Check the antenna and make sure it is aligned to the correct direction. Use receiver's 'Manual Scan' option to check the signal's BER and RF Level when aligning the antenna. (b) If you use any kind of amplifier to boost the signal level, please check that it is functioning adequately. (c) Refer to solutions in item (2) above.
(4) No audio service.	(a) Check the receiver and your TV's volume are properly set and not in 'mute' mode. (b) Check the audio connectors are correctly and firmly connected. (c) Make sure the receiver switch is set to the correct Audio mode: Dolby Digital or PCM (MPEG). (d) Check the left and right audio channel. Sometimes the preferred audio service is set in the left or right channel only. Please refer to 'Audio Select'.
(5) No video service.	If there is a music banner being displayed, then there is ONLY audio available on this channel (for example, a radio channel).
(6) Does not have all the channels available after using 'Auto Scan' when installing the receiver.	(a) Try 'Full Scan' to scan the missing channels instead of 'Quick Scan'. Some new channels may be available in your area. (b) Try getting your aerial installation checked for good quality reception.
(7) Cannot lock signal by using 'Manual Setup'.	(a) Check the frequency you enter is exactly the centre frequency of the required channel. (b) Refer to solutions in item (3) above.
(8) No Teletext.	(a) Make sure the channel you are watching provides a teletext service. (b) Press the ▤ button on the remote control again to confirm there is not teletext service.
(9) Cannot receive channels after moving the receiver between cities (e.g. from Melbourne to Sydney).	Enter the Setup menu and use the 'Restore to default' option to clear the channel memory, then enter the Install menu and use 'Full Scan' or 'Quick Scan' for your new area to scan through all the channels again.

On Screen Error Message

Message	Solution
(1) Bad Signal.	(a) Check the antenna is connected correctly to the tuner input (ANT. RF IN) of the receiver. (b) Refer to solutions in item (3) above.
(2) Database is empty Press menu for installation.	Press the **MENU** button to call up OSD menu for channel search.

Download from Www.Somanuals.com. All Manuals Search And Download.

Index

16:9 (Full Screen), 15
4:3 (Full Screen Crop), 15
4:3 (Letter Box), 15

A, B
Accessories, supplied, 4
Aspect Ratio, 15
Audio Output Control, 15
Audio Select, 17
Batteries, inserting into the remote control, 11

C, D
Change Password, 14
Channels Available, 23
Connecting,
- to a DVD recorder, 18
- to a Hi-Fi, Home Theatre, 20
- to a TV, 7
- to a VCR, 18

E, F
Easy Setup procedure, 11
Favorite List, 12
Favorite Preset, 13
Full Scan, 13

G, H, I, J, K
Information, 16
Install menu, 13
i-Plate display, 17

L, M, N
Manual Scan, 13
Menu system, general operation, 12
MPEG Volume Control, 15

O
Overview,
- receiver, 6
- remote control, 5

P, Q
Parental Contorol, 14
Parental Rating, 14
Picture Freeze, 17
Picture In Picture (PIP), 17
Program Edit, 13
Program List, 12
Program Sorting, 13
Quick Scan, 13

R
Receiver overview, 6
Remote control of TV, 21
Remote control overview, 5
Restore to Default, 16

S
Safety information, 2
Setup menu, 15
Skip, 13
Specifications, 22
S/W Update, 16

T
Table of contents, 3
Teletext, 17
Time Setup, 16
Troubleshooting, 24

U, V, W, X, Y, Z
Video Format, 15
Video/Audio Setup, 15

Download from Www.Somanuals.com. All Manuals Search And Download.

Download from Www.Somanuals.com. All Manuals Search And Download.

Download from Www.Somanuals.com. All Manuals Search And Download.

http://www.sony.net/
DST-HD500
Sony Corporation Printed in Taiwan

Recyclable

Download from Www.Somanuals.com. All Manuals Search And Download.

Free Manuals Download Website

http://myh66.com

http://usermanuals.us

http://www.somanuals.com

http://www.4manuals.cc

http://www.manual-lib.com

http://www.404manual.com

http://www.luxmanual.com

http://aubethermostatmanual.com

Golf course search by state

http://golfingnear.com

Email search by domain

http://emailbydomain.com

Auto manuals search

http://auto.somanuals.com

TV manuals search

http://tv.somanuals.com