Southern PRIDE

SPECIFICATIONS
MODEL DH-65

COOKING CAPACITIES FOR THE DH-65

St. Louis Ribs (2.75lb.)	65 pieces	179 lb total
Baby Back Ribs (1.75lbs)	65 pieces	114 lb total
Following Capacities Possible with Optional Flat Racks		
Pork Butt (7 lb.)	30 pieces	210 lb. total
Chicken (3lb.)	40 pieces	120 lb. total
Brisket (12 lb.)	15 pieces	180 lb. total

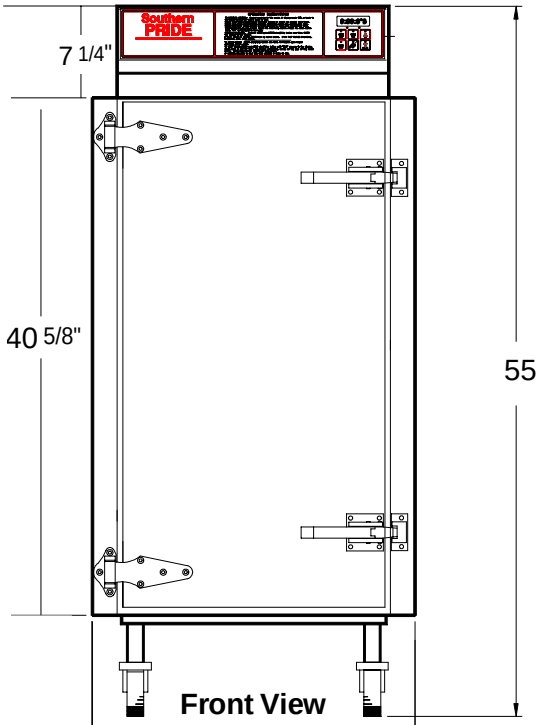

Front View

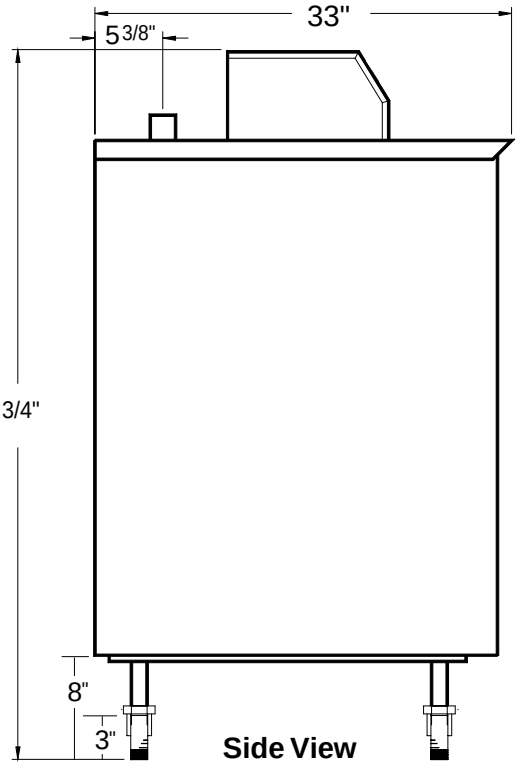

Side View

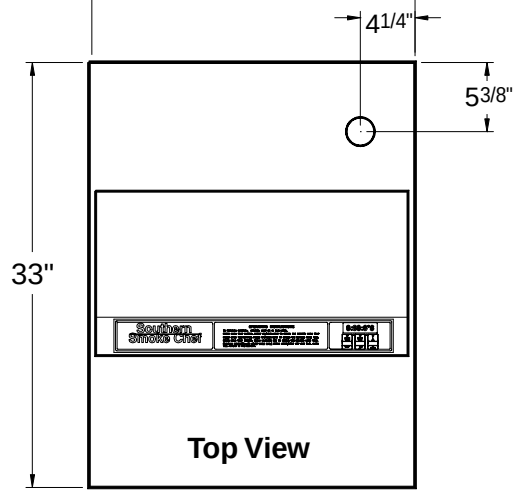

Top View

DH-65

Electrical Requirements: 208 or 240 volts AC, 60 hertz, 1 phase, 45 amp wiring required.

Construction: All 18 gauge Stainless Steel.

Chipbox: Uses hardwood chips.

Dimensions: 55 3/4" tall, 25 3/8" wide, 33" deep

Shell Dimensions: 40 5/8" tall, 25 3/8" wide, 33" deep

Food Racks: Five standard rib racks 18"x 26"
5 Optional Flat Racks 16.25 Sq.Ft. of Cooking Surface.
5" Spacing between food racks.

Air Circulation: Low Velocity Convection Fan.

Temperature Range: 100-325 degrees F.

Approvals: UL, ULC, NSF

Venting: Must be installed under a vent hood. Contact local code officials and a commercial kitchen ventilation contractor prior to installation.

Southern PRIDE

Southern Pride Distributing, L.L.C.
2102 East Main Street - Marion, Illinois 62959
www.southern-pride.com sales@sopride.com service@sopride.com parts@sopride.com
Sales: 800-851-8180 Service: 800-437-2679

Phone: 618-997-9348
Fax: 618-993-5960
Service Fax: 618-993-0378

Download from Www.Somanuals.com. All Manuals Search And Download.

Revised 9/15/04

Free Manuals Download Website

http://myh66.com

http://usermanuals.us

http://www.somanuals.com

http://www.4manuals.cc

http://www.manual-lib.com

http://www.404manual.com

http://www.luxmanual.com

http://aubethermostatmanual.com

Golf course search by state

http://golfingnear.com

Email search by domain

http://emailbydomain.com

Auto manuals search

http://auto.somanuals.com

TV manuals search

http://tv.somanuals.com