STERLING®

STRONG. PROFESSIONAL. DESIGN.™

S P E C I F I C A T I O N S

Kitchen Classics™ Tribute™ Single Hole Kitchen Faucet

Models C7111FS

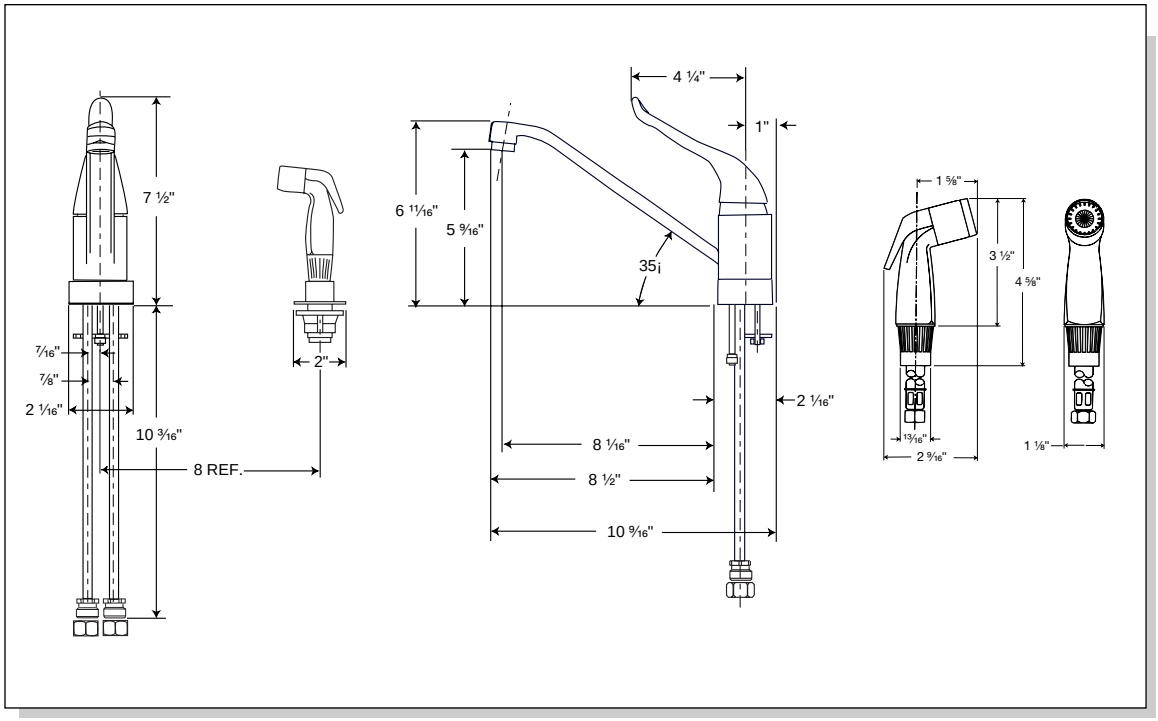

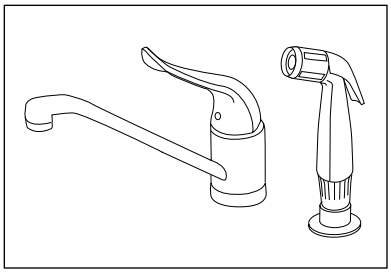

PRODUCT OVERVIEW

Single Control Kitchen
Styled lever handle
Compatible with 2 sink holes

C7111FS — Chrome plated, IPS connectors, with side spray, styled lever handle, single pak

FEATURES

- **Input**
  Min. - Max. / 20 - 80 psi
  Max. Allowable 125 psi
- **Flow Rate**
  2.2 gpm at 60 psi
- **Connectors**
  1/2" IPS
- **Valve Type**
  Ceramic washerless cartridge
- **Standards and Ratings**
  Meets or exceeds the requirements of the following standards: ASME A112.18.1M, ANSI 117.1, ADA "Americans with Disabilities Act"
- **Warranty**
  Limited Lifetime

FLOWRATE (GPM)

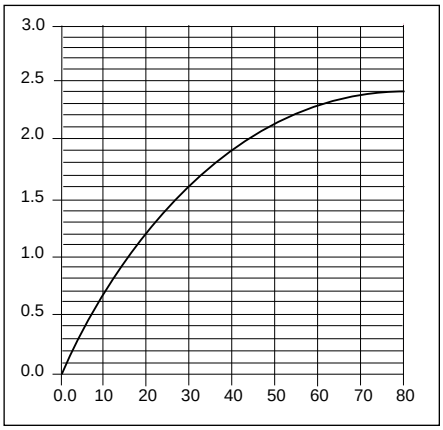

LINE PRESSURE P.S.I. GAUGE

★ Made in U.S.A.

© 2001 Sterling Plumbing, 444 Highland Drive, Kohler, WI 53044 1-888-STERLING

Pub. No. 00077 01/02

www.sterlingplumbing.com

Printed in U.S.A.

Fixture dimensions are nominal and conform to tolerances established by ANSI Standards, Z124.1.

Download from Www.Somanuals.com. All Manuals Search And Download.

Free Manuals Download Website

http://myh66.com

http://usermanuals.us

http://www.somanuals.com

http://www.4manuals.cc

http://www.manual-lib.com

http://www.404manual.com

http://www.luxmanual.com

http://aubethermostatmanual.com

Golf course search by state

http://golfingnear.com

Email search by domain

http://emailbydomain.com

Auto manuals search

http://auto.somanuals.com

TV manuals search

http://tv.somanuals.com