lenovo

Hardware Maintenance Manual

ThinkThinkThinkCentreThink

Machine Types: 6393, 6394, 6395, 6396, and 6397

lenovo

Hardware Maintenance Manual

Machine Types: 6393, 6394, 6395, 6396, and 6397

Note: Before using this information and the product it supports, be sure to read the information under Appendix A “Notices” on page 143.

Eighth Edition (September 2010)

© Copyright Lenovo 2005, 2010.

LENOVO products, data, computer software, and services have been developed exclusively at private expense and are sold to governmental entities as commercial items as defined by 48 C.F.R. 2.101 with limited and restricted rights to use, reproduction and disclosure.

LIMITED AND RESTRICTED RIGHTS NOTICE: If products, data, computer software, or services are delivered pursuant a General Services Administration ″GSA″ contract, use, reproduction, or disclosure is subject to restrictions set forth in Contract No. GS-35F-05925.

Contents

Chapter 1. About this manual 1
Important Safety Information 1
Important information about replacing RoHS compliant FRUs 1

Chapter 2. Safety information 3
General safety 3
Electrical safety 3
Safety inspection guide 5
Handling electrostatic discharge-sensitive devices 5
Grounding requirements 6
Safety notices (multi-lingual translations) 6

Chapter 3. General information. . . . 29
The ThinkVantage Productivity Center program . . 29
Additional information resources 29
Specifications 29

Chapter 4. General Checkout. 31
Checking for power problems. 31
Problem determination tips 32

Chapter 5. Diagnostics 33
PC-Doctor for Windows 33
PC-Doctor for Windows PE. 33
Running diagnostics from the Rescue and Recovery workspace 33
PC-Doctor for DOS 34
Creating a diagnostic CD image 34
Creating diagnostic diskettes 34
Running diagnostics from the CD or diskettes 34
Navigating through the diagnostics programs 35
Running tests 35
Viewing the test log 36

Chapter 6. Using the Setup Utility . . 39
Starting the Setup Utility program 39
Viewing and changing settings 39
Using passwords. 39
Password considerations. 39
User Password. 40
Administrator Password 40
Setting, changing, and deleting a password . 40
Selecting a startup device 40
Selecting a temporary startup device 40
Selecting or changing the startup device sequence 41
Advanced settings 41
Exiting from the Setup Utility program 41

Chapter 7. Symptom-to-FRU Index . 43
Hard disk drive boot error 43
Diagnostic error codes 43
Beep symptoms 59
POST error codes 60
Miscellaneous error messages 61
Undetermined problems 62

Chapter 8. Replacing FRUs. 65
Locations. 65
Connectors on the front of the computer . . 65
Connectors on the rear of the computer . . . 66
Locating components 66
System board locations 68
Opening the cover 68
Replacing the CMOS battery 69
Replacing the microprocessor 70
Replacing the system board 72
Replacing a hard disk drive. 73
Replacing an optical drive 74
Replacing a memory module 75
Replacing the modem. 76
Replacing the Express card assembly 77
Replacing the Media Card Reader 78
Replacing the system fan assembly 79
Completing the FRU replacement 81

Chapter 9. FRU lists 83
Machine Type 6393 83
Machine Type 6394 93
Machine Type 6395 103
Machine Type 6396 117
Machine Type 6397 127

Chapter 10. Additional Service Information 139
Security features 139
Hardware controlled Passwords 139
Operating system password 139
Vital product data. 139
BIOS levels 139

© Copyright Lenovo 2005, 2010

Updating (flashing) BIOS from a CD-ROM or diskette 139
Recovering from a POST/BIOS update failure . . 140
Power management 140
Automatic configuration and power interface (ACPI) BIOS 141
Automatic Power-On features 141

Appendix A. Notices 143
Television output notice 144
Trademarks 144

Chapter 1. About this manual

This manual contains service and reference information for ThinkCentre® computers listed on the cover. It is intended only for trained servicers who are familiar with Lenovo® computer products.

Before servicing a Lenovo product, be sure to read the Safety Information. See Chapter 2 “Safety information” on page 3.

This manual includes a complete Field Replaceable Unit (FRU) part number listing for each machine type listed on the cover. If you have internet access, FRU part numbers are also available at: http:/www.lenovo.com/support

Important Safety Information

Be sure to read all caution and danger statements in this book before performing any of the instructions.

Veuillez lire toutes les consignes de type DANGER et ATTENTION du présent document avant d'exécuter les instructions.

Lesen Sie unbedingt alle Hinweise vom Typ "ACHTUNG" oder "VORSICHT" in dieser Dokumentation, bevor Sie irgendwelche Vorgänge durchführen

Leggere le istruzioni introdotte da ATTENZIONE e PERICOLO presenti nel manuale prima di eseguire una qualsiasi delle istruzioni

Certifique-se de ler todas as instruções de cuidado e perigo neste manual antes de executar qualquer uma das instruções

Es importante que lea todas las declaraciones de precaución y de peligro de este manual antes de seguir las instrucciones.

تأكد من قراءة كل التحذيرات الموجودة في هذا الكتاب قبل اتباع هذه التعليمات .

执行任何说明之前，请确保已阅读本书中的所有警告和危险声明。

執行任何指示前，請確實閱讀本書中的所有警告及危險聲明。

ודאו שקראתם את כל הודעות האזהרה והסכנה במסמך זה לפני שתבצעו פעולה כלשהי.

본 사용 설명서에 기재된 내용을 실행하기 전에 모든 주의사항 및 위험사항을 숙지하십시오.

Important information about replacing RoHS compliant FRUs

RoHS, The Restriction of Hazardous Substances in Electrical and Electronic Equipment Directive (2002/95/EC) is a European Union legal requirement affecting the global electronics industry. RoHS requirements must be implemented on Lenovo products placed on the market and sold in the European Union after June 2006. Products on the market before June 2006 are not required to have RoHS compliant parts. If the parts are not compliant originally, replacement parts can also be noncompliant, but in all cases, if the parts are compliant, the replacement parts must also be compliant.

© Copyright Lenovo 2005, 2010

Note: RoHS and non-RoHS FRU part numbers with the same fit and function are identified with unique FRU part numbers.

Lenovo plans to transition to RoHS compliance well before the implementation date and expects its suppliers to be ready to support Lenovo's requirements and schedule in the EU. Products sold in 2005, will contain some RoHS compliant FRUs. The following statement pertains to these products and any product Lenovo produces containing RoHS compliant parts.

RoHS compliant ThinkCentre parts have unique FRU part numbers. Before or after June, 2006, failed RoHS compliant parts must always be replaced using RoHS compliant FRUs, so only the FRUs identified as compliant in the system HMM or direct substitutions for those FRUs can be used.

Products marketed before June 2006		**Products marketed after June 2006**	
Current or original part	**Replacement FRU**	**Current or original part**	**Replacement FRU**
Non-RoHS	Can be Non-RoHS	Must be RoHS	Must be RoHS
Non-RoHS	Can be RoHS		
Non-RoHS	Can sub to RoHS		
RoHS	Must be RoHS		

Note: A direct substitution is a part with a different FRU part number that is automatically shipped by the distribution center at the time of order.

Chapter 2. Safety information

This chapter contains the safety information that you need to be familiar with before servicing a computer.

General safety

Follow these rules to ensure general safety:

- Observe good housekeeping in the area of the machines during and after maintenance.
- When lifting any heavy object:
  1. Ensure you can stand safely without slipping.
  2. Distribute the weight of the object equally between your feet.
  3. Use a slow lifting force. Never move suddenly or twist when you attempt to lift.
  4. Lift by standing or by pushing up with your leg muscles; this action removes the strain from the muscles in your back. *Do not attempt to lift any objects that weigh more than 16 kg (35 lb) or objects that you think are too heavy for you.*
- Do not perform any action that causes hazards to the customer, or that makes the equipment unsafe.
- Before you start the machine, ensure that other service representatives and the customer's personnel are not in a hazardous position.
- Place removed covers and other parts in a safe place, away from all personnel, while you are servicing the machine.
- Keep your tool case away from walk areas so that other people will not trip over it.
- Do not wear loose clothing that can be trapped in the moving parts of a machine. Ensure that your sleeves are fastened or rolled up above your elbows. If your hair is long, fasten it.
- Insert the ends of your necktie or scarf inside clothing or fasten it with a nonconductive clip, approximately 8 centimeters (3 inches) from the end.
- Do not wear jewelry, chains, metal-frame eyeglasses, or metal fasteners for your clothing.
  Remember: Metal objects are good electrical conductors.
- Wear safety glasses when you are: hammering, drilling soldering, cutting wire, attaching springs, using solvents, or working in any other conditions that might be hazardous to your eyes.
- After service, reinstall all safety shields, guards, labels, and ground wires. Replace any safety device that is worn or defective.
- Reinstall all covers correctly before returning the machine to the customer.

Electrical safety

CAUTION:
Electrical current from power, telephone, and communication cables can be hazardous. To avoid personal injury or equipment damage, disconnect the attached power cords, telecommunication systems, networks, and modems before you open the server/workstation covers, unless instructed otherwise in the installation and configuration procedures.

Observe the following rules when working on electrical equipment.

© Copyright Lenovo 2005, 2010

Important: Use only approved tools and test equipment. Some hand tools have handles covered with a soft material that does not insulate you when working with live electrical currents. Many customers have, near their equipment, rubber floor mats that contain small conductive fibers to decrease electrostatic discharges. Do not use this type of mat to protect yourself from electrical shock.

- Find the room emergency power-off (EPO) switch, disconnecting switch, or electrical outlet. If an electrical accident occurs, you can then operate the switch or unplug the power cord quickly.
- Do not work alone under hazardous conditions or near equipment that has hazardous voltages.
- Disconnect all power before:
  - Performing a mechanical inspection
  - Working near power supplies
  - Removing or installing Field Replaceable Units
- Before you start to work on the machine, unplug the power cord. If you cannot unplug it, ask the customer to power-off the wall box that supplies power to the machine and to lock the wall box in the off position.
- If you need to work on a machine that has exposed electrical circuits, observe the following precautions:
  - Ensure that another person, familiar with the power-off controls, is near you.
    Remember: Another person must be there to switch off the power, if necessary.
  - Use only one hand when working with powered-on electrical equipment; keep the other hand in your pocket or behind your back.
    Remember: There must be a complete circuit to cause electrical shock. By observing the above rule, you may prevent a current from passing through your body.
  - When using testers, set the controls correctly and use the approved probe leads and accessories for that tester.
  - Stand on suitable rubber mats (obtained locally, if necessary) to insulate you from grounds such as metal floor strips and machine frames.

  Observe the special safety precautions when you work with very high voltages; these instructions are in the safety sections of maintenance information. Use extreme care when measuring high voltages.
- Regularly inspect and maintain your electrical hand tools for safe operational condition.
- Do not use worn or broken tools and testers.
- *Never assume* that power has been disconnected from a circuit. First, *check* that it has been powered-off.
- Always look carefully for possible hazards in your work area. Examples of these hazards are moist floors, nongrounded power extension cables, power surges, and missing safety grounds.
- Do not touch live electrical circuits with the reflective surface of a plastic dental mirror. The surface is conductive; such touching can cause personal injury and machine damage.
- Do not service the following parts with the power on when they are removed from their normal operating places in a machine:
  - Power supply units
  - Pumps
  - Blowers and fans
  - Motor generators

  and similar units. (This practice ensures correct grounding of the units.)
- If an electrical accident occurs:
  - Use caution; do not become a victim yourself.
  - Switch off power.
  - Send another person to get medical aid.

Safety inspection guide

The intent of this inspection guide is to assist you in identifying potentially unsafe conditions on these products. Each machine, as it was designed and built, had required safety items installed to protect users and service personnel from injury. This guide addresses only those items. However, good judgment should be used to identify potential safety hazards due to attachment of features or options not covered by this inspection guide.

If any unsafe conditions are present, you must determine how serious the apparent hazard could be and whether you can continue without first correcting the problem.

Consider these conditions and the safety hazards they present:

- Electrical hazards, especially primary power (primary voltage on the frame can cause serious or fatal electrical shock).
- Explosive hazards, such as a damaged CRT face or bulging capacitor
- Mechanical hazards, such as loose or missing hardware

The guide consists of a series of steps presented in a checklist. Begin the checks with the power off, and the power cord disconnected.

Checklist:

1. Check exterior covers for damage (loose, broken, or sharp edges).
2. Power-off the computer. Disconnect the power cord.
3. Check the power cord for:
   a. A third-wire ground connector in good condition. Use a meter to measure third-wire ground continuity for 0.1 ohm or less between the external ground pin and frame ground.
   b. The power cord should be the appropriate type as specified in the parts listings.
   c. Insulation must not be frayed or worn.
4. Open the cover.
5. Check for any obvious alterations. Use good judgment as to the safety of any alterations.
6. Check inside the unit for any obvious unsafe conditions, such as metal filings, contamination, water or other liquids, or signs of fire or smoke damage.
7. Check for worn, frayed, or pinched cables.
8. Check that the power-supply cover fasteners (screws or rivets) have not been removed or tampered with.

Handling electrostatic discharge-sensitive devices

Any computer part containing transistors or integrated circuits (ICs) should be considered sensitive to electrostatic discharge (ESD). ESD damage can occur when there is a difference in charge between objects. Protect against ESD damage by equalizing the charge so that the machine, the part, the work mat, and the person handling the part are all at the same charge.

Notes:

1. Use product-specific ESD procedures when they exceed the requirements noted here.
2. Make sure that the ESD protective devices you use have been certified (ISO 9000) as fully effective.

When handling ESD-sensitive parts:

- Keep the parts in protective packages until they are inserted into the product.
- Avoid contact with other people while handling the part.

- Wear a grounded wrist strap against your skin to eliminate static on your body.
- Prevent the part from touching your clothing. Most clothing is insulative and retains a charge even when you are wearing a wrist strap.
- Use the black side of a grounded work mat to provide a static-free work surface. The mat is especially useful when handling ESD-sensitive devices.
- Select a grounding system, such as those listed below, to provide protection that meets the specific service requirement.

  Note: The use of a grounding system is desirable but not required to protect against ESD damage.

  – Attach the ESD ground clip to any frame ground, ground braid, or green-wire ground.
  – Use an ESD common ground or reference point when working on a double-insulated or battery-operated system. You can use coax or connector-outside shells on these systems.
  – Use the round ground-prong of the ac plug on ac-operated computers.

Grounding requirements

Electrical grounding of the computer is required for operator safety and correct system function. Proper grounding of the electrical outlet can be verified by a certified electrician.

Safety notices (multi-lingual translations)

The caution and danger safety notices in this section are provided in the following languages:

- English
- Arabic
- Brazilian/Portuguese
- Chinese (simplified)
- Chinese (traditional)
- French
- German
- Hebrew
- Italian
- Korean
- Spanish

DANGER

Electrical current from power, telephone and communication cables is hazardous.

To avoid a shock hazard:

- **Do not connect or disconnect any cables or perform installation, maintenance, or reconfiguration of this product during an electrical storm.**
- **Connect all power cords to a properly wired and grounded electrical outlet.**
- **Connect to properly wired outlets any equipment that will be attached to this product.**

- **When possible, use one hand only to connect or disconnect signal cables.**
- **Never turn on any equipment when there is evidence of fire, water, or structural damage.**
- **Disconnect the attached power cords, telecommunications systems, networks, and modems before you open the device covers, unless instructed otherwise in the installation and configuration procedures.**
- **Connect and disconnect cables as described in the following tables when installing, moving, or opening covers on this product or attached devices.**

To Connect	To Disconnect
1. Turn everything OFF. 2. First, attach all cables to devices. 3. Attach signal cables to connectors. 4. Attach power cords to outlet. 5. Turn device ON.	1. Turn everything OFF. 2. First, remove power cords from outlet. 3. Remove signal cables from connectors. 4. Remove all cables from devices.

CAUTION:
When replacing the lithium battery, use only Part Number 45C1566 or an equivalent type battery recommended by the manufacturer. If your system has a module containing a lithium battery, replace it only with the same module type made by the same manufacturer. The battery contains lithium and can explode if not properly used, handled, or disposed of. *Do not:*

- **Throw or immerse into water**
- **Heat to more than 100°C (212°F)**
- **Repair or disassemble**

Dispose of the battery as required by local ordinances or regulations.

CAUTION:
When laser products (such as CD-ROMs, DVD-ROM drives, fiber optic devices, or transmitters) are installed, note the following:

- **Do not remove the covers. Removing the covers of the laser product could result in exposure to hazardous laser radiation. There are no serviceable parts inside the device.**
- **Use of controls or adjustments or performance of procedures other than those specified herein might result in hazardous radiation exposure.**

DANGER

Some laser products contain an embedded Class 3A or Class 3B laser diode. Note the following:

Laser radiation when open. Do not stare into the beam, do not view directly with optical instruments, and avoid direct exposure to the beam.

≥18 kg (37 lbs) ≥32 kg (70.5 lbs) ≥55 kg (121.2 lbs)

CAUTION:
Use safe practices when lifting.

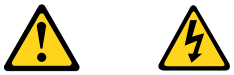

CAUTION:
The power control button on the device and the power switch on the power supply do not turn off the electrical current supplied to the device. The device also might have more than one power cord. To remove all electrical current from the device, ensure that all power cords are disconnected from the power source.

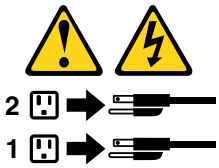

خـــطر

التيـــار الكـــهربـــي المـــوجـــود بمصـــدر الطـــاقـــة أو أجـــهزة التليفـــون أو أســـلاك الإتـــصالات يشـــكل خـــطورة.

لـــتفادي مخـــاطـــر الصـــدمـــات الكـــهربـــائـــية:

لا تحاول توصيل أو فصل أي أســـلاك أو القـــيام بعـــمليـــات تـــركيب أو صـــيانـــة أوإعـــادة توصـــيف لـــهذا المنتج أثـــناء وجـــود عاصـــفة كـــهربـــائـــية.

يجـــب تـــوصـــيل كـــل أســـلاك الكـــهربـــاء فـــي مخـــارج كـــهربـــاء ذات تـــوصـــيلات أســـلاك وتـــوصـــيلات أرضـــية صحيـــحة
يجـــب تـــوصـــيل أي جـــهاز ســـيتم الحـــاقه بـــهذا المـــنتج فـــي مخارج كـــهربـــاء ذات تـــوصـــيلات أســـلاك صحيحة.

وإن أمـــكن يـــجب اســـتخدام يـــد واحـــدة فـــقط فـــي تـــوصـــيل أو فصـــل أسلاك الإشـــارة.

لا تحـــاول تشغـــيل أي جـــهاز إذا كـــان هنـــاك أثـــر لحـــرق أو مـــياه أو تـــلف بالمكـــونـــات
يجـــب فصـــل أســـلاك الكـــهربـــاء وأنـــظمة الاتصـــالات وشـــبكات الاتصـــال وأجـــهزة المـــودم الملحـــقة قـــبل فـــتح أغطية الجهاز، مـــالـــم يـــتم طـــلب خـــلاف ذلك فـــي التـــعليـــمات الخـــاصة بالتـــركيب والتـــوصـــيف.
قم بتوصيل وفصل الأسلاك كما هو موضح في الجدول التالي وذلك عند القيام بعمليات التركيب أو النقل أو فتح أغطية هذا المنتج أو الأجهزة الملحقة.

للتوصيل:	للفصل:
قم بإيقاف كل شيء.	قم بإيقاف كل شيء.
أولا، قم بتوصيل كل الأسلاك بالأجهزة.	أولا، قم بفصل كل أسلاك الكهرباء من المخرج.
قم بتوصيل أسلاك الإشارة في لموصلات.	قم بفصل أسلاك الإشارة من الموصلات.
قم بتوصيل أسلاك الكهرباء في المخارج.	قم بفصل كل الأسلاك من الأجهزة.
قم بتشغيل الجهاز.	

تنبيـــه :
عند استبدال البطارية الليثيوم، استخدم فقط رقم الجزء الخاص Part Number 33F8354
أو نوع أخر يكون على نفس مستوى الكفاءة يحدده لك المصنع.
اذا كان النظام الخاص يستخدم معه بطارية ليثيوم قم باستبدالها بنفس النوع الذي تم صناعته من خلال نفس المصنع. تحتوي البطارية على مادة الليثيوم ويمكن أن تنفجرفي حالة عدم استخدامها أو التعامل معها بطريقة صحيحة أو عند التخلص منها بطريقة خطأ.

لا تقم بـــ:
- **القاء البطارية أو غمرها في الماء**
- **تسخينها أعلى من ١٠٠ درجة مئوية°و(٢١٢ ° فهرنـهيت)**
- **بتصليحها أو فكها**

تخلص من البطارية طبقا للقانون أو النظام المحلي .

تنبيـــه :
أثناء تركيب منتجات ليزر (مثل CD-ROMsأو وحدة تشغيل DVDأو أجهزة Fiber Optic أو وحدات الارسال) يجب مراعاة الآتي:

لا تنزع الأغطية. قد ينتج عن نزع أغطية منتج الليزر انفجار أشعة الليزر شديدة الخطورة.
لا يوجد أجزاء يمكن تغييرها داخل الجهاز. قد ينتج عن استخدام تحكمات أو تعديلات أو عمل أي تصرفات أخرى تخالف ما هو محددا هنا الى انفجار أشعة شديدة الخطورة.

خطـــر

تحتوى بعض منتجات الليزر على الفئة دايود ليزر مدمج من الفئة Class 3Aأو Class 3B. يجب مراعاة الآتي .

أشعة الليزر عند الفتح. لا تحدق الى الاشعاع و لا تنظر اليه مباشرة بواسطة أي أجهزة مرئية وتجنب التعرض المباشر للاشعاع .

≥55 kg (121.2 lbs)

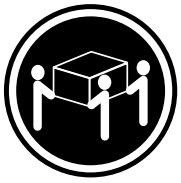

≥32 kg (70.5 lbs)

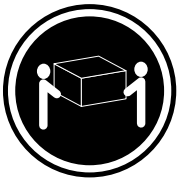

≥18 kg (37 lbs)

تنبيه :
يجب استخدام ممارسات آمنة عند الرفع

تنبيـــه :
لا يقم زر التحكم في التشغيل الموجود على الجهاز والمفتاح الكهربائي الموجود على لوحة التحكم بايقاف التيار الكهربائي المار بالجهاز. قد يكون للجهاز أكثر من سلك كهربائي واحد.
لايقاف التيار الكهربائي المار بالجهاز، تأكد من فصل جميع أسلاك الكهرباء من مصدر الكهرباء .

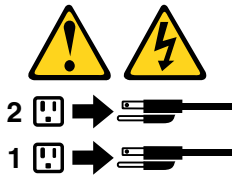

PERIGO

A corrente elétrica proveniente de cabos de alimentação, de telefone e de comunicações é perigosa.

Para evitar risco de choque elétrico:

- Não conecte nem desconecte nenhum cabo ou execute instalação, manutenção ou reconfiguração deste produto durante uma tempestade com raios.
- Conecte todos os cabos de alimentação a tomadas elétricas corretamente instaladas e aterradas.
- Todo equipamento que for conectado a este produto deve ser conectado a tomadas corretamente instaladas.
- Quando possível, utilize apenas uma das mãos para conectar ou desconectar cabos de sinal.
- Nunca ligue nenhum equipamento quando houver evidência de fogo, água ou danos estruturais.
- Antes de abrir tampas de dispositivos, desconecte cabos de alimentação, sistemas de telecomunicação, redes e modems conectados, a menos que especificado de maneira diferente nos procedimentos de instalação e configuração.
- Conecte e desconecte os cabos conforme descrito na tabela apresentada a seguir ao instalar, mover ou abrir tampas deste produto ou de dispositivos conectados.

Para Conectar:	**Para Desconectar:**
1. DESLIGUE Tudo. 2. Primeiramente, conecte todos os cabos aos dispositivos. 3. Conecte os cabos de sinal aos conectores. 4. Conecte os cabos de alimentação às tomadas. 5. LIGUE os dispositivos.	1. DESLIGUE Tudo. 2. Primeiramente, remova os cabos de alimentação das tomadas. 3. Remova os cabos de sinal dos conectores. 4. Remova todos os cabos dos dispositivos.

CUIDADO:

Ao substituir a bateria de lítio, utilize apenas uma bateria com Número de Peça 45C1566 ou um tipo de bateria equivalente recomendado pelo Se o seu sistema possui um módulo com uma bateria de lítio, substitua-o apenas por um módulo do mesmo tipo e do mesmo fabricante. A bateria contém lítio e pode explodir se não for utilizada, manuseada ou descartada de maneira correta.

Não:

- Jogue ou coloque na água
- Aqueça a mais de 100°C (212°F)
- Conserte nem desmonte

Descarte a bateria conforme requerido pelas leis ou regulamentos locais.

PRECAUCIÓN:

Quando produtos a laser (como unidades de CD-ROMs, unidades de DVD-ROM, dispositivos de fibra ótica ou transmissores) estiverem instalados, observe o seguinte:

- Não remova as tampas. A remoção das tampas de um produto a laser pode resultar em exposição prejudicial à radiação de laser. Não existem peças que podem ser consertadas no interior do dispositivo.
- A utilização de controles ou ajustes ou a execução de procedimentos diferentes dos especificados aqui pode resultar em exposição prejudicial à radiação.

PERIGO

Alguns produtos a laser contêm diodo de laser integrado da Classe 3A ou da Classe 3B. Observe o seguinte:

Radiação a laser quando aberto. Não olhe diretamente para o feixe a olho nu ou com instrumentos ópticos e evite exposição direta ao feixe.

≥18 kg (37 lbs)

≥32 kg (70.5 lbs)

≥55 kg (121.2 lbs)

CUIDADO:

Utilize procedimentos de segurança para levantar equipamentos.

CUIDADO:

O botão de controle de alimentação do dispositivo e o botão para ligar/desligar da fonte de alimentação não desligam a corrente elétrica fornecida ao dispositivo. O dispositivo também pode ter mais de um cabo de alimentação. Para remover toda a corrente elétrica do dispositivo, assegure que todos os cabos de alimentação estejam desconectados da fonte de alimentação.

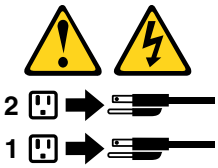

危险

电源、电话和通信电缆中的电流是危险的。

为避免电击危险：

- 请勿在雷电期间连接或断开任何电缆的连接，或者对本产品进行安装、维护或重新配置。
- 将所有电源线连接到正确连线和妥善接地的电源插座。
- 将所有要连接到该产品的设备连接到正确连线的插座。
- 如果可能，请仅使用一只手来连接或断开信号电缆的连接。
- 切勿在有火、水、结构损坏迹象的情况下开启任何设备。
- 在打开设备外盖之前请断开已连接的电源线、远程通信系统、网络和调制解调器，除非在安装和配置过程中另有说明。
- 当安装、移动或打开该产品或连接设备的外盖时，请按照下表所述来连接或断开电缆的连接。

要连接	要断开连接
1. 切断所有电源。 2. 首先将所有电缆连接到设备。 3. 将信号电缆连接到接口。 4. 将电源线连接到插座。 5. 开启设备。	1. 切断所有电源。 2. 首先从插座上拔出电源线。 3. 从接口上拔出信号电缆。 4. 从设备上拔出所有电缆。

警告：
更换锂电池时，请仅使用部件号为 33F8354 的电池或制造商推荐的同类电池。如果您的系统有包含锂电池的模块，请仅使用同一制造商生产的相同模块类型来替换该模块。该电池中含有锂，如果使用、操作或处理不当，可能会发生爆炸。

切勿：

- 投入或浸入水中
- 加热到 100℃（212℉）以上
- 维修或拆卸

请按照当地法令或条例的要求处理电池。

警告：
安装激光产品（例如 CD-ROM、DVD-ROM 驱动器、光纤设备或发射设备）时，请注意以下声明：

- 请勿卸下外盖。卸下激光产品的外盖可能导致遭受激光辐射的危险。该设备内没有可维修的部件。
- 如果不按照此处指定的过程进行控制、调整或操作，则有可能导致遭受辐射的危险。

危险

某些激光产品包含嵌入式 3A 类或 3B 类激光二极管。请注意以下声明：

打开后有激光辐射。请勿注视光束，请勿直接用光学仪器查看，并请避免直接暴露在光束中。

≥18 千克（37 磅） ≥32 千克（70.5 磅） ≥55 千克（121.2 磅）

警告：
抬起时请采取安全措施。

警告：
设备上的电源控制按钮和电源上的电源开关不会切断供给该设备的电流。该设备还可能有多条电源线。要切断该设备的所有电流，请确保所有电源线都与电源断开连接。

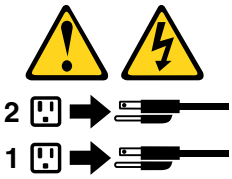

危險

電源、電話及通訊纜線上的電流都具有危險性。
若要避免觸電危險：
- 請勿在雷雨期間，連接或拔除纜線、執行安裝、維護或重新配置本產品。
- 將所有電源線連接到正確配線及接地的電源插座。
- 任何與本產品連接的設備都必須連接到配線妥當的電源插座。
- 請盡可能用單手連接或拔除信號線。
- 發生火災、水災或結構損害時，絕對不要開啟任何設備。
- 除非在安裝及配置程序中另有指示，否則在開啟裝置機蓋之前，請拔掉連接的電源線、電信系統、網路及數據機。
- 安裝、移動或開啟本產品或附屬裝置的機蓋時，請遵循下列說明連接及拔掉纜線。

連線	切斷連線
1. 關閉所有開關。 2. 首先，連接所有接線到裝置。 3. 連接信號線到接頭。 4. 連接電源線到插座。 5. 開啟裝置。	1. 關閉所有開關。 2. 首先，拔掉插座上的電源線。 3. 拔掉接頭上的信號線。 4. 拔掉裝置上所有接線。

警告：
更換鋰電池時，請僅使用產品編號 **33F8354** 或製造商所建議的同類型電池。
如果您的系統中含有鋰電池模組，請僅使用同一家製造商所生產的相同模組進行更換。
如果未以正確方式使用、處理或棄置含鋰的電池，會有爆炸的危險。
請勿：

- 沾溼或浸入水中
- 置於 **100C (212F)** 以上的高溫環境
- 修理或拆開

請按照各地區有關廢棄電池的法令和規定處理舊電池。

。 。

警告：
- 請勿移除機蓋。移除雷射產品的機蓋，可能會導致暴露在危險的雷射輻射中。裝置內部並無可自行維修的零件。
- 利用或執行非本文中所指定的控制、調整及執行程序，可能會導致危險的輻射外洩。

危險

部分雷射產品含有內嵌式 **Class 3A** 或 **Class 3B** 雷射二極體。請注意下列事項：
在開啟光碟機時，會發生雷射輻射。請勿直視光束或用光學儀器直接檢視，並避免直接暴露在光束中。

≥ 18 公斤（37 磅） ≥ 32 公斤（70.5 磅） ≥ 55 公斤（121.2 磅）

警告：
搬運時請注意安全。

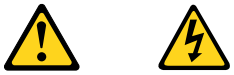

警告：
裝置上的電源控制按鈕及電源供應器上的電源開關，無法關閉裝置所產生的電流。
該裝置可能有多條電源線。若要除去裝置流出的所有電流，請確認已切斷所有電源線的電源。

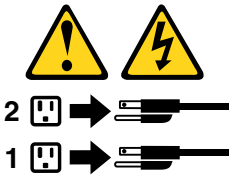

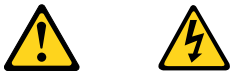

DANGER

Le courant électrique provenant de l'alimentation, du téléphone et des câbles de transmission peut présenter un danger.

Pour éviter tout risque de choc électrique :

- Ne manipulez aucun câble et n'effectuez aucune opération d'installation, d'entretien ou de reconfiguration de ce produit au cours d'un orage.
- Branchez tous les cordons d'alimentation sur un socle de prise de courant correctement câblé et mis à la terre.
- Branchez sur des socles de prise de courant correctement câblés tout équipement connecté à ce produit.
- Lorsque cela est possible, n'utilisez qu'une seule main pour connecter ou déconnecter les câbles d'interface.
- Ne mettez jamais un équipement sous tension en cas d'incendie ou d'inondation, ou en présence de dommages matériels.
- Avant de retirer les carters de l'unité, mettez celle-ci hors tension et déconnectez ses cordons d'alimentation, ainsi que les câbles qui la relient aux réseaux, aux systèmes de télécommunication et aux modems (sauf instruction contraire mentionnée dans les procédures d'installation et de configuration).
- Lorsque vous installez, que vous déplacez, ou que vous manipulez le présent produit ou des périphériques qui lui sont raccordés, reportez-vous aux instructions ci-dessous pour connecter et déconnecter les différents cordons.

Connexion	Déconnexion
1. Mettez les unités HORS TENSION. 2. Commencez par brancher tous les cordons sur les unités. 3. Branchez les câbles d'interface sur des connecteurs. 4. Branchez les cordons d'alimentation sur des prises. 5. Mettez les unités SOUS TENSION.	1. Mettez les unités HORS TENSION. 2. Débranchez les cordons d'alimentation des prises. 3. Débranchez les câbles d'interface des connecteurs. 4. Débranchez tous les câbles des unités.

ATTENTION:

Remplacer la pile au lithium usagée par une pile de référence identique exclusivement, (référence 45C1566), ou suivre les instructions du fabricant qui en définit les équivalences. Si votre système est doté d'un module contenant une pile au lithium, vous devez le remplacer uniquement par un module identique, produit par le même fabricant. La pile contient du lithium et peut exploser en cas de mauvaise utilisation, de mauvaise manipulation ou de mise au rebut inappropriée.

Ne pas :

- **la jeter à l'eau,**
- **l'exposer à des températures supérieures à 100°C,**
- **chercher à la réparer ou à la démonter.**

Ne pas mettre la pile à la poubelle. Pour la mise au rebut, se reporter à la réglementation en vigueur.

ATTENTION:

Si des produits à laser (tels que des unités de CD-ROM, de DVD-ROM, des unités à fibres optiques, ou des émetteurs) sont installés, prenez connaissance des informations suivantes :

- **Ne retirez pas le carter. En ouvrant l'unité de CD-ROM ou de DVD-ROM, vous vous exposez au rayonnement dangereux du laser. Aucune pièce de l'unité n'est réparable.**
- **Pour éviter tout risque d'exposition au rayon laser, respectez les consignes de réglage et d'utilisation des commandes, ainsi que les procédures décrites dans le présent manuel.**

DANGER

Certains produits à laser contiennent une diode à laser intégrée de classe 3A ou 3B. Prenez connaissance des informations suivantes:

Rayonnement laser lorsque le carter est ouvert. Evitez toute expositiondirecte au rayon laser. Evitez de regarder fixement le faisceau ou del'observer à l'aide d'instruments optiques.

≥18 kg (37 lbs) ≥32 kg (70.5 lbs) ≥55 kg (121.2 lbs)

ATTENTION:

Soulevez la machine avec précaution.

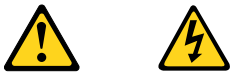

ATTENTION:

L'interrupteur de contrôle d'alimentation de l'unité et l'interrupteur dubloc d'alimentation ne coupent pas le courant électrique alimentantl'unité. En outre, le système peut être équipé de plusieurs cordonsd'alimentation. Pour mettre l'unité hors tension, vous devez déconnectertous les cordons de la source d'alimentation.

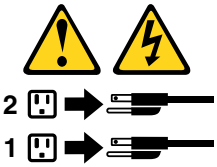

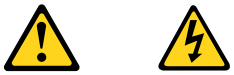

VORSICHT

An Netz-, Telefon- und Datenleitungen können gefährliche Spannungen anliegen.

Aus Sicherheitsgründen:

- **Bei Gewitter an diesem Gerät keine Kabel anschließen oder lösen. Ferner keine Installations-, Wartungs- oder Rekonfigurationsarbeiten durchführen.**
- **Gerät nur an eine Schutzkontaktsteckdose mit ordnungsgemäß geerdetem Schutzkontakt anschließen.**
- **Alle angeschlossenen Geräte ebenfalls an Schutzkontaktsteckdosen mit ordnungsgemäß geerdetem Schutzkontakt anschließen.**
- **Die Signalkabel nach Möglichkeit einhändig anschließen oder lösen, um einen Stromschlag durch Berühren von Oberflächen mit unterschiedlichem elektrischem Potenzial zu vermeiden.**
- **Geräte niemals einschalten, wenn Hinweise auf Feuer, Wasser oder Gebäudeschäden vorliegen.**

- **Die Verbindung zu den angeschlossenen Netzkabeln, Telekommunikationssystemen, Netzwerken und Modems ist vor dem Öffnen des Gehäuses zu unterbrechen, sofern in den Installations- und Konfigurationsprozeduren keine anders lautenden Anweisungen enthalten sind.**
- **Zum Installieren, Transportieren und Öffnen der Abdeckungen des Computers oder der angeschlossenen Einheiten die Kabel gemäß der folgenden Tabelle anschließen und abziehen.**

Zum Anschließen der Kabel gehen Sie wie folgt vor	Zum Abziehen der Kabel gehen Sie wie folgt vor
1. Schalten Sie alle Einheiten AUS. 2. Schließen Sie erst alle Kabel an die Einheiten an. 3. Schließen Sie die Signalkabel an die Buchsen an. 4. Schließen Sie die Netzkabel an die Steckdose an. 5. Schalten Sie die Einheit EIN.	1. Schalten Sie alle Einheiten AUS. 2. Ziehen Sie zuerst alle Netzkabel aus den Netzsteckdosen. 3. Ziehen Sie die Signalkabel aus den Buchsen. 4. Ziehen Sie alle Kabel von den Einheiten ab.

CAUTION:

Eine verbrauchte Lithiumbatterie nur durch eine Batterie mit der Teilenummer 45C1566 oder eine gleichwertige, vom Hersteller empfohlene Batterie ersetzen. Enthält das System ein Modul mit einer Lithiumbatterie, dieses nur durch ein Modul desselben Typs und von demselben Hersteller ersetzen. Die Batterie enthält Lithium und kann bei unsachgemäßer Verwendung, Handhabung oder Entsorgung explodieren.

Die Batterie nicht:

- mit Wasser in Berührung bringen.
- über 100 C erhitzen.
- reparieren oder zerlegen.

Die örtlichen Bestimmungen für die Entsorgung von Sondermüll beachten.

ACHTUNG:

Bei der Installation von Lasergeräten (wie CD-ROM-Laufwerken, DVD- aufwerken, Einheiten mit Lichtwellenleitertechnik oder Sendern) Folgendes beachten:

- **Die Abdeckungen nicht entfernen. Durch Entfernen der Abdeckungen des Lasergeräts können gefährliche Laserstrahlungen freigesetzt werden. Das Gerät enthält keine zu wartenden Teile.**
- **Werden Steuerelemente, Einstellungen oder Durchführungen von Prozeduren anders als hier angegeben verwendet, kann gefährliche Laserstrahlung auftreten.**

VORSICHT

Einige Lasergeräte enthalten eine Laserdiode der Klasse 3A oder 3B. Beachten Sie Folgendes:

Laserstrahlung bei geöffneter Verkleidung. Nicht in den Strahl blicken. Keine Lupen oder Spiegel verwenden. Strahlungsbereich meiden.

≥18 kg (37 lbs) ≥32 kg (70.5 lbs) ≥55 kg (121.2 lbs)

ACHTUNG:

Arbeitsschutzrichtlinien beim Anheben der Maschine beachten.

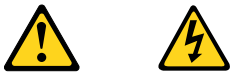

ACHTUNG:

Mit dem Netzschalter an der Einheit und am Netzteil wird die Stromversorgung für die Einheit nicht unterbrochen. Die Einheit kann auch mit mehreren Netzkabeln ausgestattet sein. Um die Stromversorgung für die Einheit vollständig zu unterbrechen, müssen alle zum Gerät führenden Netzkabel vom Netz getrennt werden.

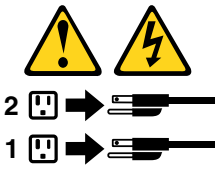

סכנה

זרם חשמלי המועבר בכבלי חשמל, טלפון ותקשורת הוא מסוכן.

כדי להימנע מסכנת התחשמלות:

- אל תחברו או תנתקו כבלים, ואל תבצעו פעולת התקנה, תחזוקה או שינוי תצורה במוצר זה במהלך סופת ברקים.
- חברו את כל כבלי החשמל לשקע חשמל מחווט ומוארק כהלכה.
- חברו כל ציוד שיחובר למוצר זה לשקעי חשמל מחווטים כהלכה.
- במידת האפשר, השתמשו ביד אחת בלבד לחיבור או לניתוק של כבלי אותות.
- לעולם אל תפעילו ציוד כלשהו כאשר יש עדות לנזק מבני או לנזק כתוצאה מאש או ממים.
- נתקו את כבלי החשמל, מערכות התקשורת, התקני הרשת והמודמים המחוברים לפני פתיחת כיסויי ההתקן, אלא אם הליכי ההתקנה וקביעת התצורה מורים אחרת.
- בעת התקנה, העברה או פתיחת כיסויים במוצר זה או בהתקנים המחוברים, חברו ונתקו את הכבלים כמתואר בטבלה שלהלן.

כדי לחבר	כדי לנתק
1. כבו הכל.	1. כבו הכל.
2. ראשית, חברו את כל הכבלים להתקנים.	2. ראשית, נתקו את כבלי החשמל מהשקעים.
3. חברו את כבלי האותות למחברים.	3. נתקו את כבלי האותות מהמחברים.
4. חברו את כבלי החשמל לשקעים.	4. הסירו את כל הכבלים מההתקנים.
5. הפעילו את ההתקן.	

זהירות:
בעת החלפת סוללת הליתיום, השתמשו רק בסוללה בעלת מק"ט 33F8354 או בסוג תואם שהומלץ על ידי היצרן.
אם המערכת כוללת מודול המכיל סוללת ליתיום, החליפו אותו רק במודול מאותו סוג ומתוצרת אותו יצרן.
הסוללה מכילה ליתיום, ועלולה להתפוצץ אם לא משתמשים ומטפלים בה או משליכים אותה כיאות.

לעולם:

- אל תטבלו במים
- אל תחממו לטמפרטורה הגבוהה מ-100°C (212°F)
- אל תתקנו או תפרקו

השליכו את הסוללה כנדרש לפי התקנות והחוקים המקומיים.

זהירות:
בעת התקנת מוצרי לייזר (כגון כונני תקליטורים ו-DVD, התקני סיב אופטי או משדרים), שימו לב לאזהרות הבאות:

- אל תסירו את הכיסויים. הסרת הכיסויים של מוצר הלייזר עלולה לגרום לחשיפה לקרינת לייזר מסוכנת. אין חלקים ברי טיפול בתוך ההתקן.
- שינויים, שימוש בבקרות או ביצוע הליכים אחרים מאלה המתוארים כאן, עלולים לגרום לחשיפה לקרינה מסוכנת.

סכנה

מוצרי לייזר מסוימים מכילים דיודת לייזר מסוג Class 3A או Class 3B. שימו לב לאזהרה הבאה:

כאשר הוא פתוח, המוצר פולט קרינת לייזר. אל תביטו ישירות בקרן, אל תביטו ישירות בעזרת ציוד אופטי, והימענו מחשיפה לקרן.

≥ 55 ק"ג (121.2 ליב')

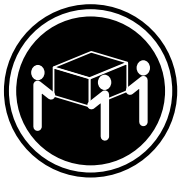

≥ 32 ק"ג (70.5 ליב')

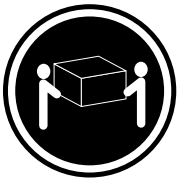

≥ 18 ק"ג (37 ליב')

זהירות:
השתמשו בהליכים
הנאותים בעת
הרמת הציוד.

זהירות:
לחצן ההפעלה של ההתקן ומתג ההפעלה של ספק החשמל אינם מפסיקים את זרם החשמל המסופק להתקן. בנוסף, ההתקן עשוי לכלול יותר מכבל חשמל אחד. כדי לסלק את כל הזרם החשמלי מההתקן, ודאו שכל כבלי החשמל מנותקים ממקור החשמל.

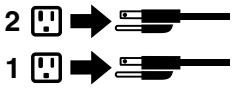

PERICOLO

La corrente elettrica proveniente dai cavi di alimentazione, del telefono e di comunicazione può essere pericolosa.

Per evitare il rischio di scosse elettriche:

- **Non collegare o scollegare qualsiasi cavo oppure effettuare l'installazione, la manutenzione o la riconfigurazione del prodotto durante un temporale.**
- **Collegare tutti i fili elettrici a una presa di alimentazione correttamente cablata e dotata di messa a terra.**
- **Collegare alle prese elettriche appropriate tutte le apparecchiature che verranno utilizzate per questo prodotto.**

- **Se possibile, utilizzare solo una mano per collegare o scollegare i cavi di segnale.**
- **Non accendere assolutamente apparecchiature in presenza di incendi, perdite d'acqua o danno strutturale.**
- **Scollegare i cavi di alimentazione, i sistemi di telecomunicazione, le reti e il modem prima di aprire i coperchi del dispositivo, salvo istruzioni contrarie relative alle procedure di installazione e configurazione.**
- **Collegare e scollegare i cavi come descritto nella seguente tabella quando vengono effettuate operazioni di installazione, spostamento o apertura dei coperchi di questo prodotto o delle unità collegate.**

Per collegarsi	Per scollegarsi
1. SPEGNERE le apparecchiature. 2. Innanzitutto, collegare tutti i cavi alle unità. 3. Collegare i cavi di segnale ai connettori. 4. Collegare i cavi di alimentazione alla presa. 5. Accendere l'unità.	1. SPEGNERE le apparecchiature. 2. Innanzitutto, rimuovere i cavi di alimentazione dalla presa. 3. Rimuovere i cavi di segnale dai connettori. 4. Rimuovere tutti i cavi dalle unità.

ATTENZIONE:

Quando si sostituisce la batteria al litio, utilizzare solo il Numero parte 45C1566 o un tipo di batteria equivalente consigliato dal produttore. Se sul sistema è presente un modulo che contiene una batteria al litio, sostituirlo solo con un tipo di modulo dello stesso tipo della stessa casa di produzione. La batteria contiene litio e può esplodere se usata, maneggiata o smaltita in modo non corretto.

Non:

- **Gettare o immergere la batteria nell'acqua**
- **Riscaldarla ad una temperatura superiore ai 100 gradi C (212 gradi F)**
- **Smontarla, ricaricarla o tentare di ripararla**

Le batterie usate vanno smaltite in accordo alla normativa in vigore (DPR 915/82 e successive disposizioni e disposizioni locali).

ATTENZIONE:

Quando vengono installati prodotti laser (quali CD-ROM, unità DVD-ROM, unità a fibre ottiche o trasmittenti), tener presente quanto segue:

- **Non rimuovere gli sportelli. L'apertura di un'unità laser può determinare l'esposizione a radiazioni laser pericolose. All'interno dell'unità non vi sono parti su cui effettuare l'assistenza tecnica.**
- **L'utilizzo di controlli, regolazioni o l'esecuzione di procedure non descritti nel presente manuale possono provocare l'esposizione a radiazioni pericolose.**

PERICOLO

Alcune unità laser contengono un diodo laser di Classe 3A o Classe 3B. Tener presente quanto segue:

Aprendo l'unità vengono emesse radiazioni laser. Non fissare il fascio, non guardarlo direttamente con strumenti ottici ed evitare l'esposizione al fascio.

≥18 kg (37 lbs)

≥32 kg (70.5 lbs)

≥55 kg (121.2 lbs)

ATTENZIONE:

Prestare attenzione nel sollevare l'apparecchiatura.

ATTENZIONE:

Il pulsante di controllo dell'alimentazione presente sull'unità e l'interruttore dell'alimentatore non disattivano l'alimentazione corrente fornita all'unità. E' possibile che l'unità disponga di più cavi di alimentazione. Per disattivare l'alimentazione dall'unità, accertarsi che tutti i cavi di alimentazione siano scollegati dalla fonte di alimentazione.

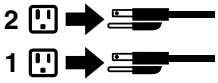

위험

전원, 전화, 통신 케이블의 전류는 위험합니다.

감전의 위험을 피하려면 다음과 같이 하십시오.

- 번개가 치는 날에는 케이블을 연결 또는 분리하거나 본 제품을 설치, 보수, 재구성하지 마십시오.

- 모든 전원 코드는 올바르게 접지된 전기 콘센트에 연결하십시오.

- 본 제품에 연결될 장치는 올바르게 배선된 콘센트에 연결하십시오.

- 신호 케이블을 연결 또는 분리할 때 가능하면 한 손만을 사용하십시오.

- 불 또는 물로 인한 손상이나 구조적인 손상이 있을 경우 장치의 전원을 절대 켜지 마십시오.

- 설치 및 구성 과정에 별도의 지시 사항이 없는 경우, 장치의 덮개를 열기 전에 연결된 전원 코드, 원격 통신 시스템, 네트워크, 모뎀을 분리하십시오.

- 본 제품이나 연결된 장치를 설치, 이동하거나 덮개를 열 때 다음 표와 같은 순서로 케이블을 연결하거나 분리하십시오.

연결할 때:	분리할 때:
1. 모든 장치의 전원을 끄십시오. 2. 먼저 모든 케이블을 장치에 연결하십시오. 3. 커넥터에 신호 케이블을 연결하십시오. 4. 콘센트에 전원 코드를 연결하십시오. 5. 장치의 전원을 켜십시오.	1. 모든 장치의 전원을 끄십시오. 2. 먼저 콘센트에서 전원 코드를 분리하십시오. 3. 커넥터에서 신호 케이블을 분리하십시오. 4. 장치에서 모든 케이블을 분리하십시오.

주의:
배터리를 교환할 때는 Part Number 33F8354 또는 제조업체에서 지정한 동일한 종류의 제품을 사용하십시오. 사용자의 시스템이 리튬 배터리를 포함하는 모듈일 경우, 동일한 제조업체에서 동일한 모듈 유형으로 생산된 제품으로 교체하십시오. 배터리에는 리튬이 함유되어 있어 잘못 사용, 취급 또는 폐기할 경우 폭발의 위험이 있습니다.

사고를 방지하려면 다음 사항을 준수하십시오.

- 배터리를 물 속에 던지거나 침수시키지 마십시오.

- 100℃(212°F) 이상 가열하지 마십시오.

- 수리하거나 분해하지 마십시오.

배터리를 폐기할 때는 법령 또는 회사의 안전 수칙에 따라 폐기하십시오.

주의:
CD-ROM, DVD-ROM 장치, 광섬유 장치 또는 송신 장치와 같은 레이저 제품을 설치할 때, 다음과 같은 취급 주의사항을 참고하십시오.

– 덮개를 열지 마십시오. 덮개를 열면 레이저 복사 에너지에 노출될 위험이 있습니다. 장치 내부에는 사용자가 조정하거나 수리할 수 있는 부품이 없습니다.

– 규정된 것 이외의 절차 수행, 제어 조정 등의 행위로 인해 해로운 레이저 복사에 노출될 수 있습니다.

위험

일부 장비에는 임베디드 클래스 3A 또는 클래스 3B 레이저 다이오드가 있습니다. 다음 주의사항에 유의하십시오.

드라이브가 열리면 레이저 복사 에너지가 방출됩니다. 광선이 눈에 직접 쏘이지 않도록 하십시오. 나안 또는 광학 기구를 착용한 상태에서 광선을 직접 바라보지 않도록 하십시오.

≥18 kg (37 lbs)

≥32 kg (70.5 lbs)

≥55 kg (121.2 lbs)

주의:
제품을 들어 올릴 때
안전 규제를 따르십시오.

주의:
장치의 전원 제어 버튼 및 전원 공급 장치의 전원 스위치를 사용하여 장치에 공급되는 전기를 차단하지 마십시오. 장치는 둘 이상의 코드를 가지고 있을 수 있습니다. 장치에서 모든 전원을 차단하려면 콘센트에서 코드가 모두 분리되어 있는지 확인하십시오.

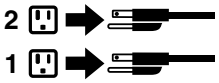

PELIGRO

La corriente eléctrica procedente de cables de alimentación, teléfonos y cables de comunicación puede ser peligrosa.

Para evitar el riesgo de descarga eléctrica:

- **No conecte ni desconecte los cables ni realice ninguna tarea de instalación, mantenimiento o reconfiguración de este producto durante una tormenta eléctrica.**
- **Conecte todos los cables de alimentación a tomas de corriente debidamente cableadas y conectadas a tierra.**
- **Cualquier equipo que se conecte a este producto también debe conectarse a tomas de corriente debidamente cableadas.**
- **Siempre que sea posible, utilice una sola mano para conectar o desconectar los cables de señal.**
- **No encienda nunca un equipo cuando hay señales de fuego, agua o daños estructurales.**

- **Desconecte los cables de alimentación, los sistemas de telecomunicaciones, las redes y los módems conectados antes de abrir las cubiertas de los dispositivos, a menos que se indique lo contrario en los procedimientos de instalación y configuración.**
- **Conecte y desconecte los cables, como se describe en la tabla siguiente, cuando instale, mueva o abra las cubiertas de este producto o de los dispositivos conectados.**

Para conectar	Para desconectar
1. APÁGUELO todo. 2. En primer lugar, conecte todos los cables a los dispositivos. 3. Conecte los cables de señal a los conectores. 4. Enchufe los cables de alimentación a las tomas de corriente. 5. Encienda el dispositivo.	1. APÁGUELO todo. 2. En primer lugar, desenchufe los cables de alimentación de las tomas de corriente. 3. Desconecte los cables de señal de los conectores. 4. Desconecte todos los cables de los dispositivos.

PRECAUCIÓN:

Cuando sustituya una batería de litio, utilice solamente una batería número de pieza 45C1566 u otra de tipo equivalente recomendada por el fabricante. Si su sistema dispone de un módulo que contiene una batería de litio, reemplácelo sólo con el mismo tipo de módulo, del mismo fabricante. La batería contiene litio y puede explotar si no se utiliza, manipula o desecha correctamente.

No debe:

- **Arrojarla al agua o sumergirla en ella**
- **Exponerla a temperaturas superiores a 100°C (212°F)**
- **Repararla o desmontarla**

Deshágase de la batería según especifiquen las leyes o normas locales.

PRECAUCIÓN:

Cuando haya productos láser (como unidades de CD-ROM, unidades de DVD, dispositivos de fibra óptica o transmisores) instalados, tenga en cuenta lo siguiente:

- **No quite las cubiertas. Si quita las cubiertas del producto láser, podría quedar expuesto a radiación láser peligrosa. Dentro del dispositivo no existe ninguna pieza que requiera servicio técnico.**
- **Si usa controles o ajustes o realiza procedimientos que no sean los especificados aquí, podría exponerse a radiaciones peligrosas.**

PELIGRO

Algunos productos láser tienen incorporado un diodo láser de clase 3A o clase 3B. Tenga en cuenta lo siguiente:

Cuando se abre, queda expuesto a radiación láser. No mire directamente al rayo láser, ni siquiera con instrumentos ópticos, y evite exponerse directamente al rayo láser.

≥18 kg (37 lbs)

≥32 kg (70.5 lbs)

≥55 kg (121.2 lbs)

PRECAUCIÓN:

Adopte procedimientos seguros al levantar el equipo.

PRECAUCIÓN:

El botón de control de alimentación del dispositivo y el interruptor de alimentación de la fuente de alimentación no desconectan la corriente eléctrica suministrada al dispositivo. Además, el dispositivo podría tener más de un cable de alimentación. Para suprimir toda la corriente eléctrica del dispositivo, asegúrese de que todos los cables de alimentación estén desconectados de la toma de corriente.

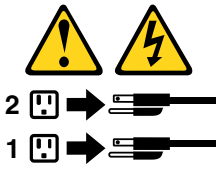

Chapter 3. General information

This chapter provides general information that applies to all machine types supported by this publication.

The ThinkVantage Productivity Center program

Use the ThinkVantage® Productivity Center program for general information about the use, operation, and maintenance of the computer. The ThinkVantage Productivity Center program also contains information to help solve problems and get repair service or other technical assistance. The ThinkVantage Productivity Center program is preinstalled on most ThinkCentre products.

Additional information resources

If you have Internet access, the most up-to-date information for the computer is available from the World Wide Web.

You can find the following information:
- Customer Replaceable Unit (CRU) removal and installation instructions
- Publications
- Troubleshooting information
- Parts information
- Downloads and drivers
- Links to other useful sources of information

To access this information, point your browser to http://www.lenovo.com/support/.

Specifications

This section lists the physical specifications for your computer.

© Copyright Lenovo 2005, 2010

Dimensions

Width: 275 mm (10.83 in.)

Height: 81 mm (3.19 in.)

Depth: 242 mm (9.53 in.)

Weight

Note: The weight does not include the power supply or any external cables.

Minimum configuration as shipped: 3.27 kg (7.2 lbs)

Maximum configuration: 3.72 kg (8.2 lbs)

Environment

- Air temperature:
  - Operating at 0 - 3000 ft (914.4 m): 10° to 35°C (50° to 95°F)
  - Non-operating: -40° to 60°C (-40° to 140°F)
  - Maximum altitude: 3000 ft (914.4 m)

    Note: The maximum altitude, 3000 ft. (914.4 m), is the maximum altitude at which the specified air temperatures apply. At higher altitudes, the maximum air temperatures are lower than those specified.
- Humidity (non-condensing):

  Operating: 10% to 80%

  Non-operating: 10% to 90%

Electrical input

- Input voltage:
  - Low range:

    Minimum: 100 V ac

    Maximum: 127 V ac

    Input frequency range: 50/60 Hz
  - High range:

    Minimum: 200 V ac

    Maximum: 240 V ac

    Input frequency range: 50/60 Hz
  - Input kilovolt-amperes (kVA) (approximate):
    - Minimum configuration as shipped: 0.05 kVA (all machine types)
    - Maximum configuration:
      0.12 kVA (Machine Types 6393, 6394, 6395, 6396, 6397)

      Note: Power consumption and heat output vary depending on the number and type of optional features installed and the power-management optional features in use.

Chapter 4. General Checkout

Attention

The drives in the computer you are servicing might have been rearranged or the drive startup sequence changed. Be extremely careful during write operations such as copying, saving, or formatting. Data or programs can be overwritten if you select an incorrect drive.

General error messages appear if a problem or conflict is found by an application program, the operating system, or both. For an explanation of these messages, refer to the information supplied with that software package.

Before replacing any FRUs, ensure that the latest level of BIOS is installed on the system. A down-level BIOS might cause false errors and unnecessary replacement of the system board. For more information on how to determine and obtain the latest level BIOS, see “BIOS levels” on page 139.

Use the following procedure to help determine the cause of the problem:

1. Power-off the computer and all external devices.
2. Check all cables and power cords.
3. Set all display controls to the middle position.
4. Power-on all external devices.
5. Power-on the computer.
   - Look for displayed error codes
   - Listen for beep codes
   - Look for readable instructions or a main menu on the display.

   If you **did not** receive the correct response, proceed to step 6 on page 31.

   If you **do** receive the correct response, run the diagnostics. .See “Running diagnostics from the CD or diskettes” on page 34.
6. Look at the following conditions and follow the instructions:
   - If you hear beep codes during POST, go to “Beep symptoms” on page 59.
   - If the computer displays a POST error, go to “POST error codes” on page 60.
   - If the computer hangs and no error is displayed, go to “Power problems” on page 31.

Checking for power problems

If the computer does not turn on when the power switch is pressed, use the following procedure to help troubleshoot.

1. Press the power switch to turn on the computer. Check the power indicator LED next to the power switch.
   - If the LED is illuminated (on), the computer power is OK. Attempt to run the diagnostics. See “Running diagnostics from the CD or diskettes” on page 34.
   - If the LED is not illuminated (off), go to step 2 on page 31
2. Check the status of the power indicator LED on the AC/DC power adapter.
   - If the LED is illuminated (on), go to step 7 on page 32.
   - If the LED is not illuminated (off), go to the next step 3 on page 31.
3. Verify that the power cord is properly connected to an AC power outlet.
4. Verify that you are using a good AC power outlet. Plug another device into the outlet or contact the power company or supplier to verify that the outlet is working correctly .

© Copyright Lenovo 2005, 2010

5. Check the power cord continuity.
6. Replace the AC/DC power adapter.
7. Verify that the power cord from the AC/DC power adapter to the computer is properly connected. See “Connectors on the rear of the computer” on page 66.
8. Open the cover. See “Opening the cover” on page 68.
9. Check the Power switch/LED assembly connector on the system board. See “System board locations” on page 68. Reseat the cable from the Power switch/LED assembly to the system board.
10. Replace the power switch/LED assembly.
11. Replace the system board. See “Replacing the system board” on page 72.

Problem determination tips

Due to the variety of hardware and software combinations that can be encountered, use the following information to assist you in problem determination. If possible, have this information available when requesting assistance from Service Support and Engineering functions.

- Machine type and model
- Processor or hard disk upgrades
- Failure symptom
  - Do diagnostics indicate a failure?
  - What, when, where, single, or multiple systems?
  - Is the failure repeatable?
  - Has this configuration ever worked?
  - If it has been working, what changes were made prior to it failing?
  - Is this the original reported failure?
- Diagnostics version
  - Type and version level
- Hardware configuration
  - Print (print screen) configuration currently in use
  - BIOS level
- Operating system software
  - Type and version level

Notes: To eliminate confusion, identical systems are considered identical only if they:

1. Are the exact machine type and models
2. Have the same BIOS level
3. Have the same adapters/attachments in the same locations
4. Have the same address jumpers/terminators/cabling
5. Have the same software versions and levels
6. Have the same Diagnostic Diskettes (version)
7. Have the same configuration options set in the system
8. Have the same setup for the operating system control files

Comparing the configuration and software set-up between “working and non-working” systems will often lead to problem resolution.

Chapter 5. Diagnostics

Diagnostic programs are used to test hardware components of your computer and report operating-system-controlled settings that can cause hardware failures. There are two diagnostic programs preinstalled on your computer to help you diagnose problems:

- PC-Doctor for Windows (used when diagnosing problems while running the Windows operating system)
- PC-Doctor for Windows PE (used when your Windows operating system will not start)

Notes:

1. You can also download the latest version of the PC-Doctor for Windows and PC-Doctor for DOS diagnostic programs from http://www.lenovo.com/support/.
2. If you are unable to isolate and repair the problem yourself by running the applicable version of PC-Doctor, click the Save Button in the PC-Doctor-log-file display. You will need to have all problem-related log files available when you speak to a Lenovo technical support representative.

PC-Doctor for Windows

PC-Doctor for Windows is a diagnostic program that works through the Windows operating system. The PC-Doctor for Windows diagnostic program enables you to view symptoms and solutions for computer problems, access the Lenovo troubleshooting center, update system drivers, and review system information.

To run PC-Doctor for Windows, open the Start menu from the Windows desktop, select **All Programs**, select **PC-Doctor for Windows**, and click **PC-Doctor for Windows**. Follow the instructions on the screen. For additional information about running the diagnostic program, refer to the PC-Doctor for Windows help system.

If you still suspect a problem after PC-Doctor for Windows runs successfully, run PC-Doctor for DOS or PC-Doctor for Windows PE to help you diagnose the computer problem.

PC Doctor for Windows also has problem determination aids that determine software and usage problems.

PC-Doctor for Windows PE

The PC-Doctor for Windows PE diagnostic program is part of the Rescue and Recovery™ workspace on each Lenovo computer. Use PC-Doctor for Windows PE, if you are unable to start the Windows operating system or if PC-Doctor for Windows has not been successful in isolating a possible problem.

Running diagnostics from the Rescue and Recovery workspace

You can run the PC-Doctor for Windows PE diagnostic program from the Rescue and Recovery workspace. To run diagnostics from the Rescue and Recovery workspace, use the following procedure:

1. Shut down the operating system and turn off the computer.
2. Repeatedly press and release the F11 key as you turn on the computer.
3. When you hear beeps or see a logo screen, stop pressing the F11 key. The Rescue and Recovery workspace opens.
4. From the Rescue and Recovery workspace, select **Diagnose hardware**.
5. The diagnostic program opens automatically. Select the diagnostic test you want to run. Press the F1 key for additional help.

© Copyright Lenovo 2005, 2010

6. Follow the instructions on the screen.

Note: Rescue media includes PC-Doctor for Windows PE. For more information about rescue media, see the *User Guide* for the computer.

PC-Doctor for DOS

Use PC-Doctor for DOS, if you are unable to start the Windows operating system or if PC-Doctor for Windows has not been successful in isolating a possible problem. You can run PC-Doctor for DOS from a diagnostic CD image or diagnostic diskettes that have been created.

Note: It is important to create a diagnostic CD image or diagnostic diskettes in case PC-Doctor for Windows PE cannot be run from the Rescue and Recovery workspace.

Creating a diagnostic CD image

To create a diagnostic CD image, download a self-starting bootable CD image (known as an .iso image) of the diagnostic program from http://www.lenovo.com/support/. After you download the image, you can create the CD using any CD burning software.

If the computer does not have a CD burner or you do not have Internet access, see “Creating diagnostic diskettes” on page 34.

Creating diagnostic diskettes

To create diagnostic diskettes, download the PC-Doctor for DOS diagnostic program from http://www.lenovo.com/support/ onto two blank, formatted diskettes.

If you do not have Internet access, create the diagnostic diskettes using the following procedure:

Note: You will need a diskette drive on the computer or a USB diskette drive to complete this procedure.

1. Shut down the operating system and turn off the computer.
2. If you are using a USB diskette drive, plug it into the computer.
3. Repeatedly press and release the F11 key as you turn on the computer.
4. When you hear beeps or see a logo screen, stop pressing the F11 key. The Rescue and Recovery workspace opens.

   Note: For some models, press the Esc key to enter Rescue and Recovery.
5. From the Rescue and Recovery workspace, select **Create diagnostic disks**.
6. Follow the instructions on the screen.
7. When prompted, insert a blank, formatted diskette into the diskette drive and continue to follow the instructions on the screen.
8. When the operation is complete, remove the diskette and click **Quit**.
9. Insert another blank, formatted diskette into the diskette drive and continue to follow the instructions on the screen.
10. When the operation is complete, remove the diskette and click **Quit**.

Running diagnostics from the CD or diskettes

To run diagnostics from the diagnostic CD image or diagnostic diskettes that you created, use the following procedure:

1. Make sure the computer is turned off.
2. If you are running diagnostics from diskettes using a USB diskette drive, plug in the USB device.

3. Insert the CD into the optical drive or the first diagnostic diskette into the diskette drive.
4. Restart the computer.

   Note: If the diagnostic program does not start, you might not have your optical drive or diskette drive set as a startable device. See “Selecting a startup device” on page 40 for instructions on how to change the startup device.
5. When the diagnostics program opens, follow the instructions on the screen.

   Note: If you are running diagnostics from a diskette, when prompted, remove the first diskette and insert the second diskette.
6. When the program finishes, be sure to remove the CD or diskette from the drive.
7. Select the diagnostic test you want to run. Press the F1 key for additional help.

Navigating through the diagnostics programs

Use the cursor movement keys to navigate within the menus.

- The **Enter** key is used to select a menu item.
- The **Esc** key is used to back up to the previous menu.
- For online help select **F1**.

Running tests

There are four ways to run the diagnostic tests.

- Using the cursor movement keys, highlight **Run Normal Test** or **Run Quick Test** from the Diagnostics menu and then press **Enter**. This automatically runs a pre-defined group of tests from each test category. **Run Normal Test** runs a more extensive set of tests than does **Run Quick Test** and takes longer to complete.
- Press **F5** to automatically run all selected tests in all categories.
- From within a test category, press **Ctrl-Enter** to automatically run only the selected tests in that category.
- Using the cursor movement keys, highlight a single test within a test category, and then press **Enter**. This runs only that test.

Press **Esc** at any time to stop the testing process.

Test results (N/A, PASSED, FAILED, ABORTED) are displayed in the field beside the test description and in the test log. See “Viewing the test log” on page 36.

To select one or more tests, use the following procedure.

1. Open the corresponding test category.
2. Using the cursor movement keys, highlight the desired test.
3. Press the space bar. A selected test is marked by **>>**. Pressing the space bar again de-selects a test and removes the >>.
4. Repeat steps 2 and 3 above to select all desired tests.

Test results

Diagnostics test results produce the following error code format:

Function Code	Failure Type	DeviceID	Date	ChkDigits	Text

- **Function Code:**
  Represents the feature or function within the PC.
- **Failure Type:**
  Represents the type of error encountered.
- **DeviceID:**
  Contains the component's unit-ID which corresponds to either a fixed disk drive, removable media drive, processor, specific RIMM, or a device on the PCI bus.
- **Date:**
  Contains the date when the diagnostic test was run. The date is retrieved from CMOS and displayed using the YYYYMMDD format.
- **ChkDigits:**
  Contains a 2-digit check-digit value to ensure the following:
  - Diagnostics were run on the specified date.
  - Diagnostics were run on the specified computer.
  - The diagnostic error code is recorded correctly.
- **Text:**
  Description of the error.

Note: See “Diagnostic error codes” on page 43 for error code listings.

Quick and Full erase - hard drive

The diagnostics program offers two hard drive format utilities:

- Quick Erase Hard Drive
- Full Erase Hard Drive

The Quick Erase Hard Drive provides a DOS utility that performs the following:

- Destroys the Master Boot Record (MBR) on the hard drive.
- Destroys all copies of the FAT Table on all partitions (both the master and backup).
- Destroys the partition table.
- Provides messages that warn the user that this is a non-recoverable process.

The Full Erase Hard Drive provides a DOS utility that performs the following:

- Performs all the steps in Quick Erase.
- Provides a DOS utility that writes random data to all sectors of the hard drive.
- Provides an estimate of time to completion along with a visual representation of completion status.
- Provides messages that warn the user about non-recoverable process.

Important: Make sure that all data is backed up before using the Quick or Full Erase functions.

To select the Quick Erase or Full Erase Hard Drive utility, use the following procedure:

1. Select the UTILITY option on the toolbar and press **Enter**.
2. Select either the QUICK ERASE or FULL ERASE HARD DISK option and follow the instructions.

Viewing the test log

Errors reported by the diagnostic test will be displayed by the program as a failed test.

To view details of a failure or to view a list of test results, use the following procedure from any test category screen:

1. Press **F3** to activate the log file.
2. Press **F3** again to save the file to diskette or press **F2** to print the file.

Chapter 6. Using the Setup Utility

The Setup Utility program is used to view and change the configuration settings of the computer, regardless of which operating system you are using. However, the operating-system settings might override any similar settings in the Setup Utility program.

Starting the Setup Utility program

To start the Setup Utility program, do the following:

1. If the computer is already on when you start this procedure, shut down the operating system and turn off the computer.
2. Press and hold the F1 key then turn on the computer. When you hear multiple beeps, release the F1 key.

   Notes:

   a. If you are using a USB keyboard and the Setup Utility program does not display using this method, repeatedly press and release the F1 key rather than leaving it pressed when turning on the computer.

   b. If a user password or an administrator password has been set, the Setup Utility program menu is not displayed until you type your password. For more information, see “Using passwords” on page 39.

The Setup Utility might start automatically when POST detects that hardware has been removed or new hardware has been installed in the computer.

Viewing and changing settings

The Setup Utility program menu lists items that identify system configuration topics. To view or change settings, see “Starting the Setup Utility program” on page 39.

When working with the Setup Utility program menu, you must use the keyboard. The keys used to perform various tasks are displayed at the bottom of each screen.

Using passwords

By using the Setup Utility program, you can set passwords to prevent unauthorized persons from gaining access to the computer and data. See “Starting the Setup Utility program” on page 39. The following types of passwords are available:

- User Password
- Administrator Password

You do not have to set any passwords to use the computer. However, if you decide to set any passwords, read the following sections.

Password considerations

A password can be any combination of up to twelve characters (a-z and 0-9) and symbols. For security reasons, it is a good idea to use a strong password that cannot be easily compromised. Passwords should adhere to the following rules:

- Have at least eight characters in length
- Contain at least one alphabetic character and one numeric character

© Copyright Lenovo 2005, 2010

- Setup Utility program and hard disk drive passwords are not case sensitive
- Not be your name or your user name
- Not be a common word or a common name
- Be significantly different from your previous password

User Password

When a User Password is set, the computer cannot be used until a valid password is typed from the keyboard.

Administrator Password

When an Administrator Password is set, it deters unauthorized persons from changing configuration settings. If you are responsible for maintaining the settings of several computers, you might want to set an Administrator Password.

After you set an Administrator Password, a password prompt is displayed each time you try to access the Setup Utility program.

If both the user and administrator passwords are set, you can type either password. However, to change any configuration settings, you must use your administrator password.

Setting, changing, and deleting a password

To set, change, or delete a password, do the following:

Note: A password can be any combination of up to twelve characters (A- Z, a-z, and 0-9). For more information, see “Password considerations” on page 39 .

1. Start the Setup Utility program (see “Starting the Setup Utility program” on page 39).
2. From the Setup Utility program menu, select **Security**.
3. Select **Set Passwords**. Read the information displayed on the right side of the screen.

Selecting a startup device

If the computer does not start up (boot) from a device such as the CD-ROM, diskette, or hard disk as expected, use one of the following procedures to select a startup device.

Selecting a temporary startup device

Use this procedure to startup from any boot device.

Note: Not all CDs, hard disks, and diskettes are bootable.

1. Turn off the computer.
2. Press and hold the F12 key then turn on the computer. When the Startup Device Menu appears, release the F12 key.

   Note: If you are using a USB keyboard and the Startup Device Menu does not display using this method, repeatedly press and release the F12 key rather than leaving it pressed when turning on the computer.
3. Select the desired startup device from the Startup Device Menu and press Enter to begin.

Note: Selecting a startup device from the Startup Device menu does not permanently change the startup sequence.

Selecting or changing the startup device sequence

To view or permanently change the configured startup device sequence, do the following:

1. Start the Setup Utility program (see “Starting the Setup Utility program” on page 39).
2. Select **Startup**.
3. Select **Startup Sequence**. See the information displayed on the right side of the screen.
4. Select the devices for the Primary Startup Sequence, the Automatic Startup Sequence, and the Error Startup Sequence.
5. Select **Exit** from the Setup Utility menu and then **Save Settings** or **Save and exit the Setup Utility**.

If you have changed these settings and want to return to the default settings, select **Load Default Settings** on the Exit menu.

Advanced settings

On some computer models the Advanced settings menu includes a setting to Enable/Disable HyperThreading. This feature works only with HyperThreading-aware operating systems, such as Microsoft Windows XP and Windows Vista™. The default setting for HyperThreading is Enabled. However, if you select **Set Defaults** and are using an operating system other than Windows XP or Windows Vista, the computer performance might be degraded. Therefore, you should always set HyperThreading to Disabled unless you are sure your operating system supports HyperThreading.

Exiting from the Setup Utility program

When you finish viewing or changing settings, press Esc to return to the Setup Utility program menu (you might have to press Esc several times). If you want to save the new settings, select **Save & Exit Setup** before you exit. Otherwise, your changes will not be saved.

Chapter 7. Symptom-to-FRU Index

The Symptom-to-FRU index lists error symptoms and possible causes. The most likely cause is listed first. Always begin with Chapter 4 “General Checkout” on page 31. This index can also be used to help you decide which FRUs to have available when servicing a computer. If you are unable to correct the problem using this index, go to “Undetermined problems” on page 62.

Notes:

- If you have both an error message and an incorrect audio response, diagnose the error message first.
- If you cannot run the diagnostic tests or you get a diagnostic error code when running a test, but did receive a POST error message, diagnose the POST error message first.
- If you did not receive any error message, look for a description of your error symptoms in the first part of this index.

Hard disk drive boot error

A hard disk drive boot error (error codes 1962 and I999030X) can have the following causes.

Error	FRU/Action
The start-up drive is not in the boot sequence in configuration.	Check the configuration and ensure the start-up drive is in the boot sequence.
No operating system installed on the boot drive.	Install an operating system on the boot drive.
The boot sector on the start-up drive is corrupted.	The drive must be formatted, do the following: 1. Attempt to back-up the data on the failing hard disk drive. 2. Using the operating systems programs, format the hard disk drive.
The drive is defective.	Replace the hard disk drive.

Diagnostic error codes

Refer to the following diagnostic error codes when using the diagnostic tests. See “Running tests” on page 35 for the specific type for information about the Diagnostic programs.

In the following index, *X* can represent any number.

Diagnostic Error Code	FRU/Action
000-000-XXX BIOS Test Passed	**No action**
000-002-XXX BIOS Timeout	1. **Flash the system. See “Updating (flashing) BIOS from a CD-ROM or diskette” on page 139** 2. System board
000-024-XXX BIOS Addressing test failure	1. **Flash the system. See “Updating (flashing) BIOS from a CD-ROM or diskette” on page 139** 2. System board
000-025-XXX BIOS Checksum Value error	1. **Flash the system. See “Updating (flashing) BIOS from a CD-ROM or diskette” on page 139** 2. System board

© Copyright Lenovo 2005, 2010

Diagnostic Error Code	FRU/Action
000-026-XXX FLASH data error	1. **Flash the system. See "Updating (flashing) BIOS from a CD-ROM or diskette" on page 139** 2. System board
000-027-XXX BIOS Configuration/Setup error	1. **Run Setup** 2. Flash the system. See "Updating (flashing) BIOS from a CD-ROM or diskette" on page 139 3. System board
000-034-XXX BIOS Buffer Allocation failure	1. **Reboot the system** 2. Flash the system. See "Updating (flashing) BIOS from a CD-ROM or diskette" on page 139 3. Run memory test 4. System board
000-035-XXX BIOS Reset Condition detected	1. **Flash the system. See "Updating (flashing) BIOS from a CD-ROM or diskette" on page 139** 2. System board
000-036-XXX BIOS Register error	1. **Flash the system. See "Updating (flashing) BIOS from a CD-ROM or diskette" on page 139** 2. System board
000-038-XXX BIOS Extension failure	1. **Flash the system. See "Updating (flashing) BIOS from a CD-ROM or diskette" on page 139** 2. Adapter card 3. System board
000-039-XXX BIOS DMI data error	1. **Flash the system. See "Updating (flashing) BIOS from a CD-ROM or diskette" on page 139** 2. System board
000-195-XXX BIOS Test aborted by user	**Information only** Re-start the test, if necessary
000-196-XXX BIOS test halt, error threshold exceeded	1. **Press F3 to review the log file** 2. Re-start the test to reset the log file
000-197-XXX BIOS test warning	1. **Make sure the component that is called out is connected and/or enabled. See Chapter 6 "Diagnostics, Test and Recovery Information" on page 39** 2. Re-run test 3. Replace the component that is called out in warning statement 4. Replace the component under test
000-198-XXX BIOS test aborted	1. **Make sure the component that is called out is connected and/or enabled. See Chapter 6 "Diagnostics, Test and Recovery Information" on page 39** 2. Flash the system and retest. See "Updating (flashing) BIOS from a CD-ROM or diskette" on page 139 3. Go to "Undetermined problems" on page 62
000-199-XXX BIOS test failed, cause unknown	1. Go to "Undetermined problems" on page 62 2. Flash the system and re-test 3. Replace component under function test

Diagnostic Error Code	FRU/Action
000-250-XXX BIOS APM failure	1. **Flash the system. See "Updating (flashing) BIOS from a CD-ROM or diskette" on page 139** 2. System board
000-270-XXX BIOS ACPI failure	1. **Flash the system. See "Updating (flashing) BIOS from a CD-ROM or diskette" on page 139** 2. System board
001-000-XXX System Test Passed	**No action**
001-00X-XXX System Error	**System board**
001-01X-XXX System Error	**System board**
001-024-XXX System Addressing test failure	**System board**
001-025-XXX System Checksum Value error	1. **Flash the system. See "Updating (flashing) BIOS from a CD-ROM or diskette" on page 139** 2. System board
001-026-XXX System FLASH data error	1. **Flash the system. See "Updating (flashing) BIOS from a CD-ROM or diskette" on page 139** 2. System board
001-027-XXX System Configuration/Setup error	1. **Run Setup** 2. Flash the system. See "Updating (flashing) BIOS from a CD-ROM or diskette" on page 139 3. System board
001-032-XXX System Device Controller failure	**System board**
001-034-XXX System Device Buffer Allocation failure	1. **Reboot the system** 2. Flash the system. See "Updating (flashing) BIOS from a CD-ROM or diskette" on page 139 3. Run memory test 4. System board
001-035-XXX System Device Reset condition detected	**System board**
001-036-XXX System Register error	**System board**
001-038-XXX System Extension failure	1. **Adapter card** 2. System board
001-039-XXX System DMI data structure error	1. **Flash the system. See "Updating (flashing) BIOS from a CD-ROM or diskette" on page 139** 2. System board
001-040-XXX System IRQ failure	1. **Power-off/on system and re-test** 2. System board
001-041-XXX System DMA failure	1. **Power-off/on system and re-test** 2. System board
001-195-XXX System Test aborted by user	**Information only** Re-start the test, if necessary
001-196-XXX System test halt, error threshold exceeded	1. **Press F3 to review the log file** 2. Re-start the test to reset the log file

Diagnostic Error Code	FRU/Action
001-197-XXX System test warning	1. **Make sure the component that is called out is connected and/or enabled. See Chapter 6 "Diagnostics, Test and Recovery Information" on page 39** 2. Re-run test 3. Replace the component that is called out in warning statement 4. Replace the component under test
001-198-XXX System test aborted	1. **If a component is called out, make sure it is connected and/or enabled. See Chapter 6 "Diagnostics, Test and Recovery Information" on page 39** 2. Flash the system and retest. See "Updating (flashing) BIOS from a CD-ROM or diskette" on page 139 3. Go to "Undetermined problems" on page 62
001-199-XXX System test failed, cause unknown	1. Go to "Undetermined problems" on page 62 2. Flash the system and re-test 3. Replace component under function test
001-250-XXX System ECC error	**System board**
001-254-XXX 001-255-XXX 001-256-XXX 001-257-XXX System DMA error	**System board**
001-260-XXX 001-264-XXX System IRQ error	**System board**
001-268-XXX System IRQ1 failure	1. **Device on IRQ1** 2. System board
001-269-XXX System IRQ2 failure	1. **Device on IRQ2** 2. System board
001-270-XXX System IRQ3 failure	1. **Device on IRQ3** 2. System board
001-271-XXX System IRQ4 failure	1. **Device on IRQ4** 2. System board
001-272-XXX System IRQ5 failure	1. **Device on IRQ5** 2. System board
001-273-XXX System IRQ6 (diskette drive) failure	1. **Diskette Cable** 2. Diskette drive 3. System board
001-274-XXX System IRQ7 failure	1. **Device on IRQ7** 2. System board
001-275-XXX System IRQ8 failure	1. **Device on IRQ8** 2. System board
001-276-XXX System IRQ9 failure	1. **Device on IRQ9** 2. System board
001-277-XXX System IRQ10 failure	1. **Device on IRQ10** 2. System board

Diagnostic Error Code	FRU/Action
001-278-XXX System IRQ11 failure	1. **Device on IRQ11** 2. System board
001-279-XXX System IRQ12 failure	1. **Device on IRQ12** 2. System board
001-280-XXX System IRQ13 failure	1. **Device on IRQ13** 2. System board
001-281-XXX System IRQ14 (hard disk drive) failure	1. **Hard disk drive cable** 2. Hard disk drive 3. System board
001-282-XXX System IRQ15 failure	1. **Device on IRQ15** 2. System board
001-286-XXX 001-287-XXX 001-288-XXX System Timer failure	**System board**
001-292-XXX System CMOS RAM error	1. **Run Setup and re-test** 2. System board
001-293-XXX System CMOS Battery	1. **CMOS Battery** 2. System board
001-298-XXX System RTC date/time update failure	1. **Flash the system. See "Updating (flashing) BIOS from a CD-ROM or diskette" on page 139** 2. System board
001-299-XXX System RTC periodic interrupt failure	**System board**
001-300-XXX System RTC Alarm failure	**System board**
001-301-XXX System RTC Century byte error	1. **Flash the system. See "Updating (flashing) BIOS from a CD-ROM or diskette" on page 139** 2. System board
005-000-XXX Video Test Passed	**No action**
005-00X-XXX Video error	1. **Video card, if installed** 2. System board
005-010-XXX 005-011-XXX 005-012-XXX 005-013-XXX Video Signal failure	1. **Video card, if installed** 2. System board
005-016-XXX Video Simple Pattern test failure	1. **Video Ram** 2. Video card, if installed 3. System board
005-024-XXX Video Addressing test failure	1. **Video card, if installed** 2. System board
005-025-XXX Video Checksum Value error	1. **Video card, if installed** 2. System board
005-027-XXX Video Configuration/Setup error	1. **Run Setup** 2. Video drivers update 3. Video card, if installed 4. System board

Diagnostic Error Code	FRU/Action
005-031-XXX Video Device Cable failure	1. **Video cable** 2. Monitor 3. Video card, if installed 4. System board
005-032-XXX Video Device Controller failure	1. **Video card, if installed** 2. System board
005-036-XXX Video Register error	1. **Video card, if installed** 2. System board
005-038-XXX System BIOS extension failure	1. **Video card, if installed** 2. System board
005-040-XXX Video IRQ failure	1. **Video card, if installed** 2. System board
005-195-XXX Video Test aborted by user	**Information only** Re-start the test, if necessary
005-196-XXX Video test halt, error threshold exceeded	1. **Press F3 to review the log file** 2. Re-start the test to reset the log file
005-197-XXX Video test warning	1. **Make sure the component that is called out is connected and/or enabled. See Chapter 6 "Diagnostics, Test and Recovery Information" on page 39** 2. Re-run test 3. Replace the component called out in warning statement 4. Replace the component under test
005-198-XXX Video test aborted	1. **If a component is called out, make sure it is connected and/or enabled. See Chapter 6 "Diagnostics, Test and Recovery Information" on page 39** 2. Flash the system and re-test. See "Updating (flashing) BIOS from a CD-ROM or diskette" on page 139 3. Go to "Undetermined problems" on page 62
005-199-XXX Video test failed, cause unknown	1. Go to "Undetermined problems" on page 62 2. Flash the system and re-test. See "Updating (flashing) BIOS from a CD-ROM or diskette" on page 139 3. Replace component under function test
005-2XX-XXX 005-3XX-XXX Video subsystem error	1. **Video card, if installed** 2. System board
006-000-XXX Diskette interface Test Passed	**No action**
006-0XX-XXX Diskette interface error	1. **Diskette drive Cable** 2. Diskette drive 3. System board
006-195-XXX Diskette interface Test aborted by user	**Information only** Re-start the test, if necessary
006-196-XXX Diskette interface test halt, error threshold exceeded	1. **Press F3 to review the log file** 2. Re-start the test to reset the log file

Diagnostic Error Code	FRU/Action
006-197-XXX Diskette interface test warning	1. **If a component is called out, make sure it is connected and/or enabled** 2. Re-run test 3. Replace the component that is called out in warning statement 4. Replace the component under test
006-198-XXX Diskette interface test aborted	1. **If a component is called out, make sure it is connected and/or enabled** 2. Flash the system and re-test. See “Updating (flashing) BIOS from a CD-ROM or diskette” on page 139 3. Go to “Undetermined problems” on page 62
006-199-XXX Diskette interface test failed, cause unknown	1. Go to “Undetermined problems” on page 62 2. Flash the system and re-test 3. Replace component under function test
006-25X-XXX Diskette interface Error	1. **Diskette drive cable** 2. Diskette drive 3. System board
015-000-XXX USB port Interface Test Passed	**No action**
015-001-XXX USB port Presence	1. **Remove USB device(s) and re-test** 2. System board
015-002-XXX USB port Timeout	1. **Remove USB device(s) and re-test** 2. System board
015-015-XXX USB port External Loopback failure	1. **Remove USB device(s) and re-test** 2. System board
015-027-XXX USB port Configuration/Setup error	1. **Flash the system. See “Updating (flashing) BIOS from a CD-ROM or diskette” on page 139** 2. System board
015-032-XXX USB port Device Controller failure	**System board**
015-034-XXX USB port buffer allocation failure	1. **Reboot the system** 2. Flash the system and re-test. See “Updating (flashing) BIOS from a CD-ROM or diskette” on page 139 3. Run memory test 4. System board
015-035-XXX USB port Reset condition detected	1. **Remove USB device(s) and re-test** 2. System board
015-036-XXX USB port Register error	**System board**
015-040-XXX USB port IRQ failure	1. **Run setup and check for conflicts** 2. Flash the system. See “Updating (flashing) BIOS from a CD-ROM or diskette” on page 139 3. System board
015-195-XXX USB port Test aborted by user	**Information only** Re-start the test, if necessary
015-196-XXX USB port test halt, error threshold exceeded	1. **Press F3 to review the log file** 2. Re-start the test to reset the log file

Diagnostic Error Code	FRU/Action
015-197-XXX USB port test warning	1. **Make sure the component that is called out is connected and/or enabled. See Chapter 6 "Diagnostics, Test and Recovery Information" on page 39** 2. Re-run test 3. Replace the component that is called out in warning statement 4. Replace the component under test
015-198-XXX USB port test aborted	1. **If a component is called out, make sure it is connected and/or enabled. See Chapter 6 "Diagnostics, Test and Recovery Information" on page 39** 2. Flash the system and re-test. See "Updating (flashing) BIOS from a CD-ROM or diskette" on page 139 3. Go to "Undetermined problems" on page 62
015-199-XXX USB port test failed, cause unknown	1. Go to "Undetermined problems" on page 62 2. Flash the system and re-test. See "Updating (flashing) BIOS from a CD-ROM or diskette" on page 139 3. Replace component under function test
018-000-XXX PCI Card Test Passed	**No action**
018-0XX-XXX PCI Card Failure	1. **Riser card, if installed** 2. System board
018-195-XXX PCI Card Test aborted by user	1. **PCI card** 2. **Information only** Re-start the test, if necessary
018-196-XXX PCI Card test halt, error threshold exceeded	1. **Press F3 to review the log file** 2. Re-start the test to reset the log file
018-197-XXX PCI Card test warning	1. **Make sure the component that is called out is connected and/or enabled. See Chapter 6 "Diagnostics, Test and Recovery Information" on page 39** 2. Re-run test 3. Replace the component that is called out in warning statement 4. Replace the component under test
018-198-XXX PCI Card test aborted	1. **If a component is called out, make sure it is connected and/or enabled. See Chapter 6 "Diagnostics, Test and Recovery Information" on page 39** 2. Flash the system and re-test. See "Updating (flashing) BIOS from a CD-ROM or diskette" on page 139 3. Go to "Undetermined problems" on page 62
018-199-XXX PCI Card test failed, cause unknown	1. Go to "Undetermined problems" on page 62 2. Flash the system and re-test. See "Updating (flashing) BIOS from a CD-ROM or diskette" on page 139 3. Replace component under function test

Diagnostic Error Code	FRU/Action
018-250-XXX PCI Card Services error	1. **PCI card** 2. Riser card, if installed 3. System board
020-000-XXX PCI Interface Test Passed	**No action**
020-0XX-XXX PCI Interface error	1. **PCI card** 2. Riser card, if installed 3. System board
020-195-XXX PCI Test aborted by user	**Information only** Re-start the test, if necessary
020-196-XXX PCI test halt, error threshold exceeded	1. **Press F3 to review the log file** 2. Re-start the test to reset the log file
020-197-XXX PCI test warning	1. **Make sure the component that is called out is connected and/or enabled. See Chapter 6 "Diagnostics, Test and Recovery Information" on page 39** 2. Re-run test 3. Replace the component that is called out in warning statement 4. Replace the component under test
020-198-XXX PCI test aborted	1. **If a component is called out, make sure it is connected and/or enabled. See Chapter 6 "Diagnostics, Test and Recovery Information" on page 39** 2. Flash the system and re-test. See "Updating (flashing) BIOS from a CD-ROM or diskette" on page 139 3. Go to "Undetermined problems" on page 62
020-199-XXX PCI test failed, cause unknown	1. Go to "Undetermined problems" on page 62 2. Flash the system and re-test. See "Updating (flashing) BIOS from a CD-ROM or diskette" on page 139 3. Replace component under function test
020-262-XXXPCI system error	1. **PCI card** 2. Riser card, if installed 3. System board
025-000-XXXIDE interface Test Passed	**No action**
025-00X-XXX 025-01X-XXX IDE interface failure	1. **IDE signal cable** 2. Check power supply voltages 3. Reseat IDE signal cable 4. IDE device 5. System board
025-027-XXX IDE interface Configuration/Setup error	1. **IDE signal cable** 2. Flash the system. See "Updating (flashing) BIOS from a CD-ROM or diskette" on page 139 3. Reseat IDE signal cable 4. IDE device 5. System board

Diagnostic Error Code	FRU/Action
025-02X-XXX 025-03X-XXX 025-04X-XXX IDE Interface failure	1. **IDE signal cable** 2. Check AC/DC power adapter 3. Reseat IDE signal cable 4. IDE device 5. System board
025-195-XXX IDE interface Test aborted by user	**Information only** Re-start the test, if necessary
025-196-XXX IDE interface test halt, error threshold exceeded	1. **Press F3 to review the log file** 2. Re-start the test to reset the log file
025-197-XXX IDE interface test warning	1. **Make sure the component that is called out is connected and/or enabled. See Chapter 6 "Diagnostics, Test and Recovery Information" on page 39** 2. Re-run test 3. Replace the component that is called out in warning statement 4. Replace the component under test
025-198-XXX IDE interface test aborted	1. **If a component is called out, make sure it is connected and/or enabled. See Chapter 6 "Diagnostics, Test and Recovery Information" on page 39** 2. Flash the system and re-test. See "Updating (flashing) BIOS from a CD-ROM or diskette" on page 139 3. Go to "Undetermined problems" on page 62
025-199-XXX IDE interface test failed, cause unknown	1. Go to "Undetermined problems" on page 62 2. Flash the system and re-test. See "Updating (flashing) BIOS from a CD-ROM or diskette" on page 139 3. Replace component under function test
030-000-XXX SCSI interface Test Passed	**No action**
030-00X-XXX 030-01X-XXX SCSI interface failure	1. **SCSI signal cable** 2. Check AC/DC power adapter 3. SCSI device 4. SCSI adapter card, if installed 5. System board
030-027-XXX SCSI interface Configuration/Setup error	1. **SCSI signal cable** 2. Flash the system. See "Updating (flashing) BIOS from a CD-ROM or diskette" on page 139 3. SCSI device 4. SCSI adapter card, if installed 5. System board
030-03X-XXX 030-04X-XXX SCSI interface error	1. **SCSI signal cable** 2. Check AC/DC power adapter 3. SCSI device 4. SCSI adapter card, if installed 5. System board

Diagnostic Error Code	FRU/Action
030-195-XXX SCSI interface Test aborted by user	**Information only** Re-start the test, if necessary
030-196-XXX SCSI interface test halt, error threshold exceeded	1. **Press F3 to review the log file** 2. Re-start the test to reset the log file
030-197-XXX SCSI interface test warning	1. **Make sure the component that is called out is connected and/or enabled. See Chapter 6 "Diagnostics, Test and Recovery Information" on page 39** 2. Re-run test 3. Replace the component that is called out in warning statement 4. Replace the component under test
030-198-XXX SCSI interface test aborted	1. **If a component is called out, make sure it is connected and/or enabled. See Chapter 6 "Diagnostics, Test and Recovery Information" on page 39** 2. Flash the system and re-test. See "Updating (flashing) BIOS from a CD-ROM or diskette" on page 139 3. Go to "Undetermined problems" on page 62
030-199-XXX SCSI interface test failed, cause unknown	1. Go to "Undetermined problems" on page 62 2. Flash the system and re-test. See "Updating (flashing) BIOS from a CD-ROM or diskette" on page 139 3. Replace component under function test
035-000-XXX RAID interface Test Passed	**No action**
035-0XX-XXX RAID interface Failure	1. **RAID signal cable** 2. RAID device 3. RAID adapter card, if installed 4. System board
035-195-XXX RAID interface Test aborted by user	**Information only** Re-start the test, if necessary
035-196-XXX RAID interface test halt, error threshold exceeded	1. **Press F3 to review the log file** 2. Re-start the test to reset the log file
035-197-XXX RAID interface test warning	1. **Make sure the component that is called out is connected and/or enabled. See Chapter 6 "Diagnostics, Test and Recovery Information" on page 39** 2. Re-run test 3. Replace the component that is called out in warning statement 4. Replace the component under test
035-198-XXX RAID interface test aborted	1. **If a component is called out, make sure it is connected and/or enabled. See Chapter 6 "Diagnostics, Test and Recovery Information" on page 39** 2. Flash the system and re-test. See "Updating (flashing) BIOS from a CD-ROM or diskette" on page 139 3. Go to "Undetermined problems" on page 62

Diagnostic Error Code	FRU/Action
035-199-XXX RAID interface test failed, cause unknown	1. See “Undetermined problems” on page 62 2. Flash the system and re-test. See “Updating (flashing) BIOS from a CD-ROM or diskette” on page 139 3. Replace component under function test
071-000-XXX Audio port Interface Test Passed	**No action**
071-00X-XXX 071-01X-XXX 071-02X-XXX Audio port error	1. **Run Setup** 2. Flash the system. See “Updating (flashing) BIOS from a CD-ROM or diskette” on page 139 3. System board
071-03X-XXX Audio port failure	1. **Speakers** 2. Microphone 3. Audio card, if installed 4. System board
071-04X-XXX Audio port failure	1. **Run Setup** 2. Audio card, if installed 3. System board
071-195-XXX Audio port Test aborted by user	**Information only** Re-start the test, if necessary
071-196-XXX Audio port test halt, error threshold exceeded	1. **Press F3 to review the log file** 2. Re-start the test to reset the log file
071-197-XXX Audio port test warning	1. **Make sure the component that is called out is connected and/or enabled. See Chapter 6 “Diagnostics, Test and Recovery Information” on page 39** 2. Re-run test 3. Replace the component that is called out in warning statement 4. Replace the component under test
071-198-XXX Audio port test aborted	1. **If a component is called out, make sure it is connected and/or enabled. See Chapter 6 “Diagnostics, Test and Recovery Information” on page 39** 2. Flash the system and re-test. See “Updating (flashing) BIOS from a CD-ROM or diskette” on page 139 3. Go to “Undetermined problems” on page 62
071-199-XXX Audio port test failed, cause unknown	1. See “Undetermined problems” on page 62 2. Flash the system and re-test. See “Updating (flashing) BIOS from a CD-ROM or diskette” on page 139 3. Replace component under function test
071-25X-XXX Audio port failure	1. **Speakers** 2. Audio card, if installed 3. System board
080-000-XXX Game Port interface Test Passed	**No action**
080-XXX-XXX Game Port interface Error	1. **Remove the game port device and re-test the system**
080-195-XXX Game Port interface Test aborted by user	**Information only** Re-start the test, if necessary

Diagnostic Error Code	FRU/Action
080-196-XXX Game Port interface test halt, error threshold exceeded	1. **Press F3 to review the log file** 2. Re-start the test to reset the log file
080-197-XXX Game Port interface test warning	1. **Make sure the component that is called out is connected and/or enabled. See Chapter 6 "Diagnostics, Test and Recovery Information" on page 39** 2. Re-run test 3. Replace the component that is called out in warning statement 4. Replace the component under test
080-198-XXX Game Port interface test aborted	1. **If a component is called out, make sure it is connected and/or enabled. See Chapter 6 "Diagnostics, Test and Recovery Information" on page 39** 2. Flash the system and re-test. See "Updating (flashing) BIOS from a CD-ROM or diskette" on page 139 3. Go to "Undetermined problems" on page 62
080-199-XXX Game Port interface test failed, cause unknown	1. See "Undetermined problems" on page 62 2. Flash the system and re-test. See "Updating (flashing) BIOS from a CD-ROM or diskette" on page 139 3. Replace component under function test
086-000-XXX Mouse Port interface Test Passed	**No action**
086-001-XXX Mouse Port interface Presence	1. **Mouse** 2. System board
086-032-XXX Mouse Port interface Device controller failure	1. **Mouse** 2. System board
086-035-XXX Mouse Port interface Reset	1. **Mouse** 2. System board
086-040-XXX Mouse Port interface IRQ failure	1. **Run Setup** 2. Mouse 3. System board
086-195-XXX Mouse Port interface Test aborted by user	**Information only** Re-start the test, if necessary
086-196-XXX Mouse Port interface test halt, error threshold exceeded	1. **Press F3 to review the log file** 2. Re-start the test to reset the log file
086-197-XXX Mouse Port interface test warning	1. **Make sure the component that is called out is connected and/or enabled. See Chapter 6 "Diagnostics, Test and Recovery Information" on page 39** 2. Re-run test 3. Replace the component that is called out in warning statement 4. Replace the component under test

Diagnostic Error Code	FRU/Action
086-198-XXX Mouse Port interface test aborted	1. **If a component is called out, make sure it is connected and/or enabled. See Chapter 6 "Diagnostics, Test and Recovery Information" on page 39** 2. Flash the system and re-test. See "Updating (flashing) BIOS from a CD-ROM or diskette" on page 139 3. Go to "Undetermined problems" on page 62
086-199-XXX Mouse Port interface test failed, cause unknown	1. See "Undetermined problems" on page 62 2. Flash the system and re-test. See "Updating (flashing) BIOS from a CD-ROM or diskette" on page 139 3. Replace component under function test
089-000-XXX Microprocessor Test Passed	**No action**
089-XXX-XXX Microprocessor failure	1. **Microprocessor(s)** 2. System board
089-195-XXX Microprocessor Test aborted by user	**Information only** Re-start the test, if necessary
089-196-XXX Microprocessor test halt, error threshold exceeded	1. **Press F3 to review the log file** 2. Re-start the test to reset the log file
089-197-XXX Microprocessor test warning	1. **Make sure the component that is called out is connected and/or enabled. See Chapter 6 "Diagnostics, Test and Recovery Information" on page 39** 2. Re-run test 3. Replace the component that is called out in warning statement 4. Replace the component under test
089-198-XXX Microprocessor test aborted	1. **Flash the system. See "Updating (flashing) BIOS from a CD-ROM or diskette" on page 139** 2. Go to "Undetermined problems" on page 62
089-199-XXX Microprocessor test failed, cause unknown	1. See "Undetermined problems" on page 62 2. Flash the system and re-test. See "Updating (flashing) BIOS from a CD-ROM or diskette" on page 139 3. Replace component under function test
170-000-XXX Voltage Sensor(s) Test Passed	**No action**
170-0XX-XXX Voltage Sensor(s) failure	1. **Flash system** 2. System board
170-195-XXX Voltage Sensor(s) Test aborted by user	**Information only** Re-start the test, if necessary
170-196-XXX Voltage Sensor(s) test halt, error threshold exceeded	1. **Press F3 to review the log file** 2. Re-start the test to reset the log file

Diagnostic Error Code	FRU/Action
170-197-XXX Voltage Sensor(s) test warning	1. **Make sure the component that is called out is connected and/or enabled. See Chapter 6 "Diagnostics, Test and Recovery Information" on page 39** 2. Re-run test 3. Replace the component that is called out in warning statement 4. Replace the component under test
170-198-XXX Voltage Sensor(s) test aborted	1. **If a component is called out, make sure it is connected and/or enabled. See Chapter 6 "Diagnostics, Test and Recovery Information" on page 39** 2. Flash the system and re-test. See "Updating (flashing) BIOS from a CD-ROM or diskette" on page 139 3. Go to "Undetermined problems" on page 62
170-199-XXX Voltage Sensor(s) test failed, cause unknown	1. **See "Undetermined problems" on page 62** 2. Flash the system and re-test. See "Updating (flashing) BIOS from a CD-ROM or diskette" on page 139 3. Replace component under function test
170-250-XXX 170-251-XXX Voltage Sensor(s) Voltage limit error	1. **AC/DC power adapter** 2. System board
170-254-XXX Voltage Sensor(s) Voltage Regulator Module error	1. **Voltage Regulator Module (VRM)** 2. Microprocessor 3. System board
175-000-XXX Thermal Sensor(s) Test Passed	**No action**
175-0XX-XXX Thermal Sensor(s) failure	1. **Flash system** 2. System board
175-195-XXX Thermal Sensor(s) Test aborted by user	**Information only** Re-start the test, if necessary
175-196-XXX Thermal Sensor(s) test halt, error threshold exceeded	1. **Press F3 to review the log file** 2. Re-start the test to reset the log file
175-197-XXX Thermal Sensor(s) test warning	1. **Make sure the component that is called out is connected and/or enabled. See Chapter 6 "Diagnostics, Test and Recovery Information" on page 39** 2. Re-run test 3. Replace the component that is called out in warning statement 4. Replace the component under test
175-198-XXX Thermal Sensor(s) test aborted	1. **If a component is called out, make sure it is connected and/or enabled** 2. Flash the system and re-test. See "Updating (flashing) BIOS from a CD-ROM or diskette" on page 139 3. Go to "Undetermined problems" on page 62

Diagnostic Error Code	FRU/Action
175-199-XXX Thermal Sensor(s) test failed, cause unknown	1. **See "Undetermined problems" on page 62** 2. Flash the system and re-test. See "Updating (flashing) BIOS from a CD-ROM or diskette" on page 139 3. Replace component under function test
175-250-XXX 175-251-XXX Thermal Sensor(s) limit error	1. **Check fans** 2. Check AC/DC power adapter voltages 3. Microprocessor 4. System board
185-000-XXX Asset Security Test Passed	**No action**
185-XXX-XXX Asset Security failure	1. **Flash system** 2. System board
185-278-XXX Asset Security Chassis Intrusion	1. **Assure Asset Security Enabled** 2. C2 Cover Switch 3. System board
201-000-XXX System Memory Test Passed	**No action**
201-XXX-XXX System Memory error	1. **Replace the memory module called out by the test** 2. System board
202-000-XXX System Cache Test Passed	**No action**
202-XXX-XXX System Cache error	1. **Cache, if removable** 2. System board 3. Microprocessor
206-000-XXX Diskette Drive Test Passed	**No action**
206-XXX-XXX Diskette Drive error	1. **Diskette Drive Cable** 2. Check AC/DC power adapter voltages 3. Diskette drive 4. System board
215-000-XXX CD-ROM Drive Test Passed	**No action**
215-XXX-XXX CD-ROM Drive error	1. **CD-ROM Drive Cable** 2. Check AC/DC power adapter voltages 3. CD-ROM drive 4. System board
217-000-XXX Hard Disk Drive Test Passed	**No action**
217-25X-XXX 217-26X-XXX Hard Disk Drive (IDE) error	1. **Hard Disk Drive Cable** 2. Check AC/DC power adapter voltages 3. Reseat the hard disk drive cable 4. Hard Disk drive (IDE) 5. System board

Diagnostic Error Code	FRU/Action
217-28X-XXX 217-29X-XXX Hard Disk Drive (SCSI) error	1. **Hard Disk Drive Cable** 2. Check AC/DC power adapter voltages 3. Reseat the hard disk drive cable 4. Hard Disk drive (SCSI) 5. SCSI adapter card 6. System board
220-000-XXX Hi-Capacity Cartridge Drive Test Passed	**No action**
220-XXX-XXX Hi-Capacity Cartridge Drive error	1. **Remove the Hi-Capacity Cartridge Drive and re-test the system**
301-XXX-XXX Keyboard error	1. **Keyboard** 2. Check and test mouse 3. System board
301-000-XXX Keyboard Test Passed	**No action**
302-000-XXX Mouse Test Passed	**No action**
302-XXX-XXX Mouse error	1. **Mouse** 2. Check and test Keyboard 3. System board
303-000-XXX Joystick Test Passed	**No action**
303-XXX-XXX Joystick error	**Remove the Joystick and re-test the system**
305-000-XXX Monitor DDC Test Passed	**No action**
305-250-XXX Monitor DDC self test failure	1. **Run Setup to enable DDC** 2. Cable 3. Monitor 4. Video card 5. System board
415-000-XXX Modem Test Passed	**No action**
415-XXX-XXX Modem error	**Remove the Modem and re-test the system**

Beep symptoms

Beep symptoms are tones or a series of tones separated by pauses (intervals without sound) during POST.

The following tables describes beep symptoms.

Beep Symptom	FRU/Action
1, 2, or 3 beeps	Reseat the memory modules. If the error persists, replace the memory modules one at a time until the failing module is determined.
4, 5, 6, or 7 beeps9, 10, or 11 beeps	Before replacing the system board, remove any optional adapters (Express card, Modem card, Media reader) and retry. If the problem persists, replace the system board. Otherwise, reinstall the optional adapters one at a time until the failing adapter is determined.
8 beeps	Replace the system board.

POST error codes

Each time you power-on the system, it performs a series of tests that check the operation of the system and some options. This series of tests is called the *Power-On Self-Test*, or *POST*. POST does the following operations.

- Checks some basic system-board operations
- Checks the memory operation
- Starts the video operation
- Verifies that the boot drive is working

If the POST detects a problem, an error message appears on the screen. A single problem can cause several error messages to appear. When you correct the cause of the first error message, the other error messages probably will not appear on the screen the next time you turn on the system.

POST Error Message	Description/Action
CMOS battery failed	The CMOS battery is no longer functional. Replace the battery.
CMOS checksum error - defaults loaded	Checksum of CMOS is incorrect. The computer loads the default configuration settings. This error might indicate that CMOS has become corrupt due to a weak CMOS battery.
CPU at nnnn	nnnn is the running speed of the microprocessor.
Press Esc to skip memory test	Pressing Esc skips the full memory test
HARD DISK INSTALL FAILURE	Cannot find or initialize the hard disk drive controller or the drive. Make sure the hard disk drive is correctly installed. If no hard disk drives are installed, make sure the hard disk drive selection in Setup is set to NONE.
Keyboard error or no keyboard present	Cannot initialize the keyboard. Make sure the keyboard is properly connected to the computer and that no keys are held pressed during POST. To purposely configure the computer without a keyboard, set the error halt condition in Setup to HALT ON ALL, BUT KEYBOARD. The BIOS then ignores the missing keyboard during POST.
Memory Test:	This message displays during a full memory test, counting down the memory areas being tested.
Memory test fail	If POST detects an error during memory testing, additional information appears. This information gives specifics about the type and location of the memory error.

POST Error Message	Description/Action
Press TAB to show POST screen	Pressing the TAB key permits the user to toggle between the default POST display screen and a custom POST display screen.
Error: Non-System disk or disk error Replace and press any key when ready	The BIOS was unable to find a suitable boot device. Make sure the boot drive is properly connected to the computer. Make sure you have bootable media.

Miscellaneous error messages

Message/Symptom	FRU/Action
Changing display colors	**Display/Monitor**
Computer will *not* power-off. See “Power problems” on page 31.	1. **Power Switch** 2. System Board 3. Riser card, if installed
Computer will *not* PXE from server	1. **Ensure that network is in startup sequence as first device or first device after diskette** 2. Ensure that network adapter is enabled for PXE 3. Network adapter (Advise network administrator of new MAC address)
Computer will *not* perform a Wake On LAN® (if applicable)	1. **Check power supply and signal cable connections to network adapter** 2. Ensure that the operating system settings are set to enable Wake on LAN® 3. Ensure Wake On LAN feature is enabled in Setup/Configuration (see “Starting the Setup Utility program” on page 39) 4. Ensure network administrator is using correct MAC address 5. Ensure no interrupt or I/O address conflicts 6. Network adapter (advise network administrator of new MAC address)
Dead computer. See “Power problems” on page 31.	1. **AC/DC Power Adapter** 2. System Board
Diskette drive in-use light remains on or does not light when drive is active.	1. **Diskette Drive** 2. System Board 3. Diskette Drive Cable
Flashing cursor with an otherwise blank display.	1. **System Board** 2. Primary Hard Disk Drive 3. Hard Disk Drive Cable
Incorrect memory size during POST	1. **Run the Memory tests** 2. Memory Module 3. System Board

Message/Symptom	FRU/Action
"Insert a Diskette" icon appears with a known-good diagnostics diskette in the first 3.5-inch diskette drive.	1. **System Board** 2. Diskette Drive Cable 3. Network Adapter
Intensity or color varies from left to right of characters and color bars	1. **Display** 2. Video adapter (if present) 3. System Board
No power or fan not running	1. **See “Power problems” on page 31.**
Non-system disk or disk error-type message with a known-good diagnostic diskette.	1. **Diskette Drive** 2. System Board 3. Diskette Drive Cable
Other display symptoms not listed above (including blank or illegible display)	1. **Display** 2. System Board
Power-on indicator or hard disk drive in-use light not on, but computer works correctly	1. Power switch/LED assembly 2. System Board
Printer problems	1. **Printer** 2. System Board
Program loads from the hard disk with a known-good diagnostics diskette in the first 3.5-inch diskette drive	1. **Run Setup** and check Startup sequence. 2. Diskette Drive 3. Diskette Drive Cable 4. System Board 5. AC/DC power adapter
PXE computer cannot access programs from its own hard disk.	Replace the hard disk drive
PXE computer does not PXE from server	1. **Check startup sequence** 2. Check the network adapter LED status
Some or all keys on the keyboard do not work	1. **Keyboard** 2. Keyboard Cable 3. System Board

Undetermined problems

1. Turn off the computer.
2. Remove or disconnect the following components (if installed) one at a time.
   a. External devices (modem, printer, or mouse)
   b. Any adapters
   c. Memory modules
   d. Extended video memory
   e. External Cache
   f. External Cache RAM
   g. Hard disk drive
   h. Diskette drive
3. Turn on the power to re-test the system.

4. Repeat steps 1 through 3 until you find the failing device or adapter.

If all devices and adapters have been removed, and the problem continues, replace the system board.

Chapter 8. Replacing FRUs

This chapter provides step-by-step instructions for replacing major FRUs.

Important

Before you replace any FRU, read Chapter 2 “Safety information” on page 3. These precautions and guidelines will help you work safely.

FRU replacements are to be done by trained service technicians only.

Locations

This section provides illustrations to help locate the various connectors, controls, and components of the computer.

Connectors on the front of the computer

Note: Not all computer models will have the following controls and connections.

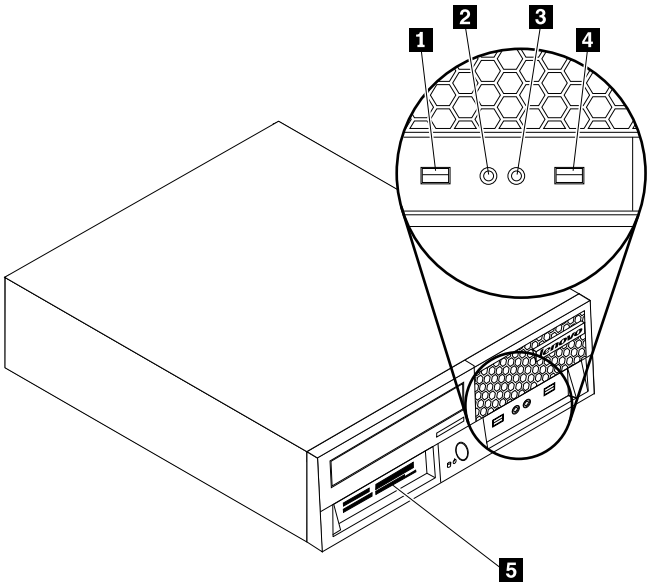

1	USB connector	4	USB connector
2	Microphone connector	5	Media card reader
3	Headphone connector		

© Copyright Lenovo 2005, 2010

Connectors on the rear of the computer

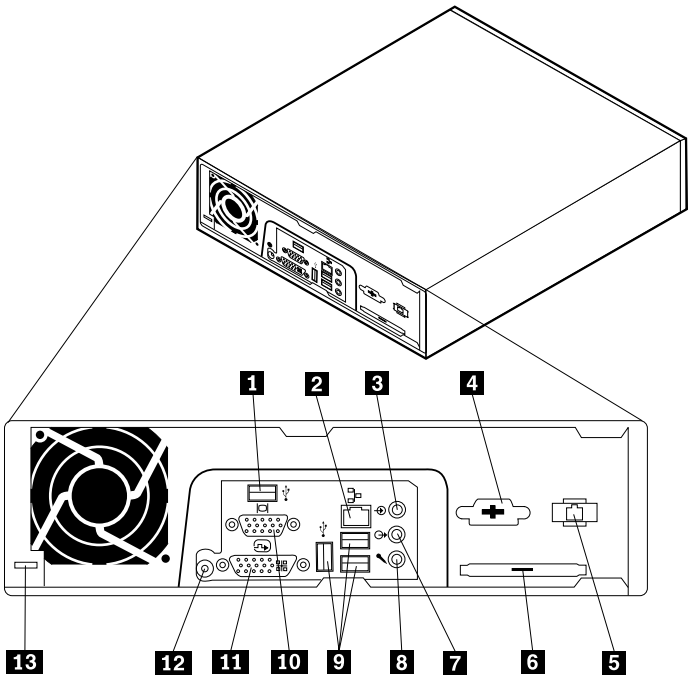

1	USB connector	8	Microphone connector
2	Ethernet connector	9	USB connectors (3)
3	Audio line in connector	10	Video graphics array (VGA) monitor connector
4	Serial connector	11	Digital video interface (DVI) monitor connector
5	RJ11 modem connector	12	Power adapter connector
6	ExpressCard (PCIe x 1) connector	13	Cable lock latch
7	Audio line out connector		

Locating components

This section shows the location of the various components in the computer.

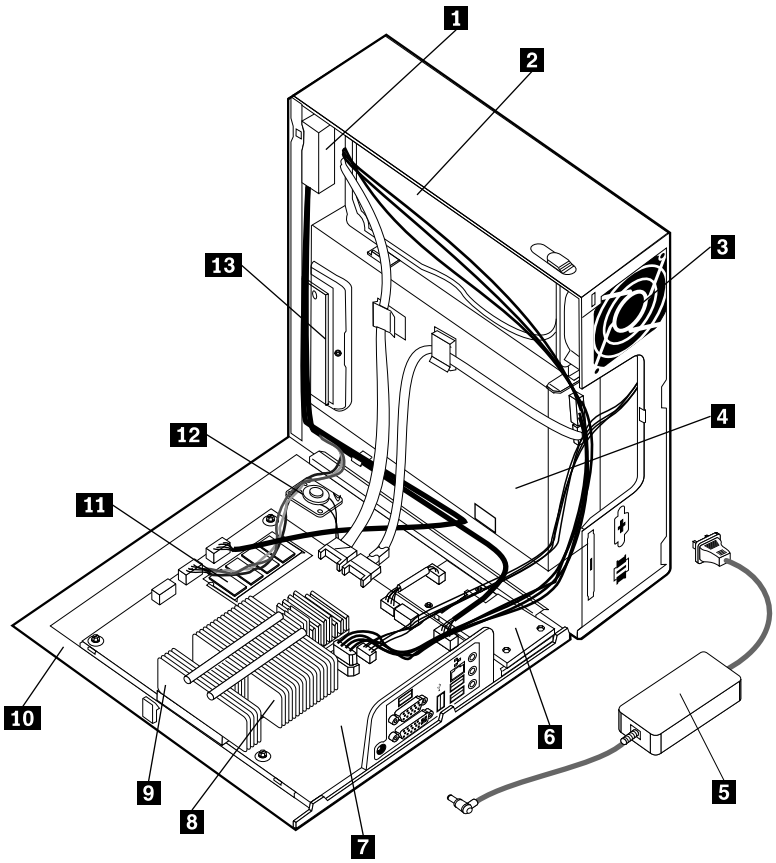

1 Front Audio/USB assembly
2 Hard disk drive
3 System fan assembly
4 Optical drive
5 AC/DC Power Adapter
6 Express Card assembly
8 Microprocessor
9 Heat sink
10 Side cover
11 Memory modules
12 Internal speaker
13 Media Card Reader

7 System board

System board locations

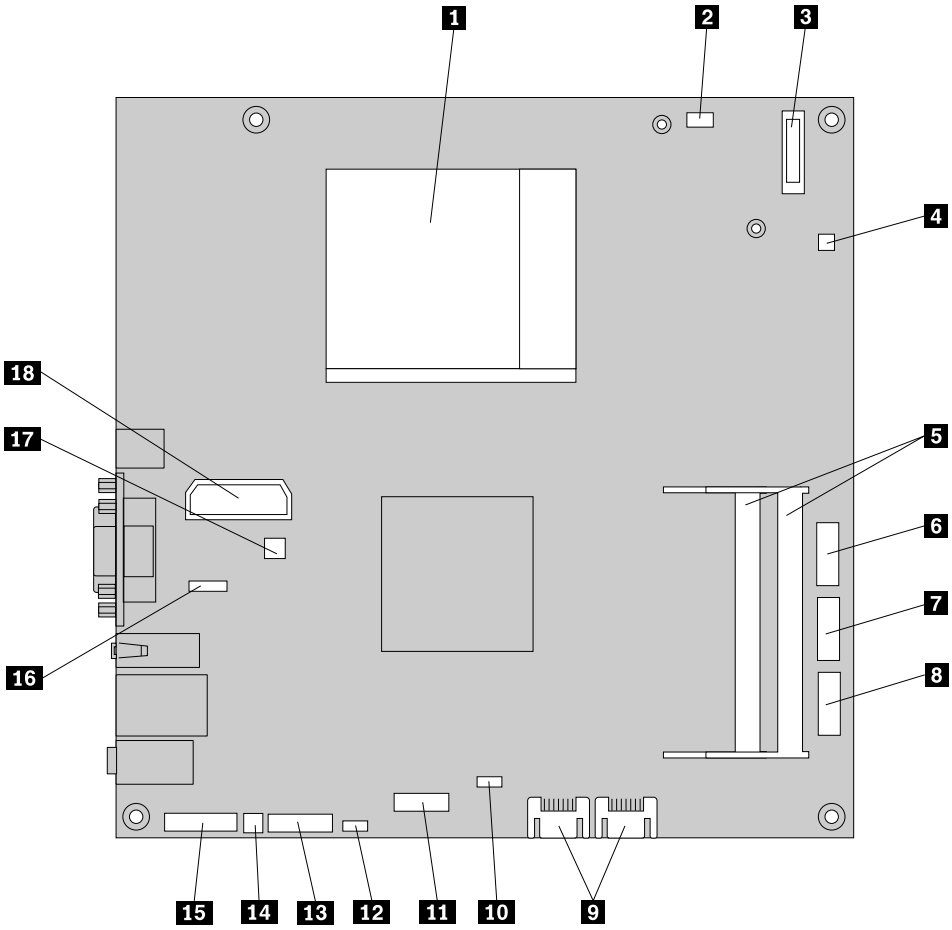

1	Microprocessor and heat sink	10	ExpressCard USB connector
2	Modem daughter card (MDC) connector	11	ExpressCard PCIe connector
3	Battery	12	Clear CMOS/Recovery jumper
4	Thermal sense cable connector	13	Media card reader connector
5	Memory connectors (2)	14	Internal speaker connector
6	Serial (COM) connector	15	Front audio connector
7	Front panel connector	16	Rear USB connector
8	Front USB connector	17	Fan connector
9	SATA IDE connectors (2)	18	Internal power distribution connector

Opening the cover

Important

Turn off the computer and wait 3 to 5 minutes to let the computer cool before opening the computer cover.

This section provides instructions on how to open the computer cover.

1. Remove any media (diskettes, CDs, or tapes) from the drives, shut down your operating system, and turn off all attached devices and the computer.
2. Unplug all power cords from electrical outlets.
3. Disconnect the cables attached to the computer. This includes power cords, input/output (I/O) cables, and any other cables that are connected to the computer. See “Connectors on the front of the computer” on page 65 and “Connectors on the rear of the computer” on page 66.
4. Remove any locking devices, such as a cable lock that secures the computer cover.
5. Press the cover-release button on the side of the cover and pivot the computer cover outward.

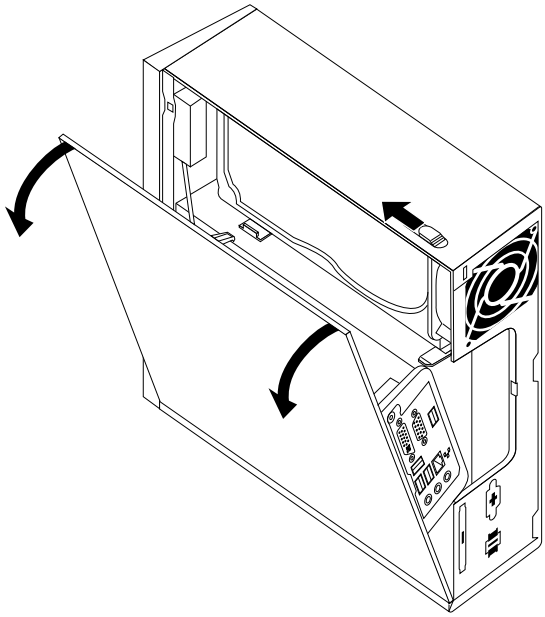

6. If the computer cover is to be removed, disconnect all the cables from the system board.

Replacing the CMOS battery

This procedure describes how to remove and replace the CMOS battery.

If the CMOS battery fails, the date, time, and configuration information (including passwords) are lost. An error message is displayed when you turn on the computer.

Important

Refer to “Safety notices (multi-lingual translations)” on page 6 for information about replacing and disposing of the battery.

CAUTION:
When replacing the lithium battery, use only Part Number 33F8354 or an equivalent type battery recommended by the manufacturer.

1. Open the computer cover. See “Opening the cover” on page 68.
2. Locate the battery. See “System board locations” on page 68.
3. Remove the old battery.

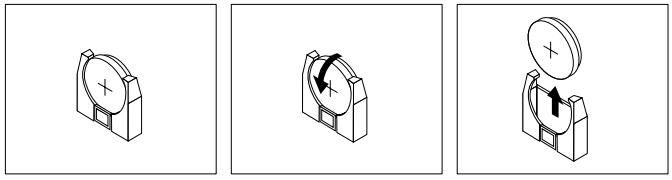

4. Install the new battery.

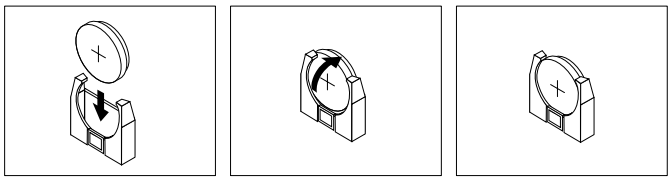

5. Close the computer cover, and connect all the cables. See “Completing the FRU replacement” on page 81.

   Note: When the computer is turned on for the first time after battery replacement, an error message might be displayed. This is normal after replacing the battery.
6. Turn on the computer and all attached devices.
7. Use the Setup Utility program to set the date and time and any passwords. See Chapter 6 “Diagnostics, Test and Recovery Information” on page 39.

Replacing the microprocessor

This section provides instructions on how to replace the microprocessor.

1. Open the computer cover. See “Opening the cover” on page 68.
2. Locate the microprocessor. See “System board locations” on page 68.
3. Remove the four screws securing the heat sink to the retention module on the system board and lift the heat sink off the system board.

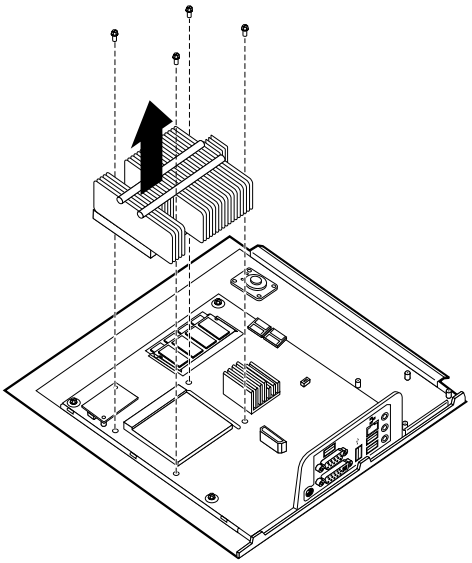

4. Disengage the microprocessor from the system board socket by pivoting the small handle upward until it is in the vertical position.
5. Lift the microprocessor straight up and out of the socket.

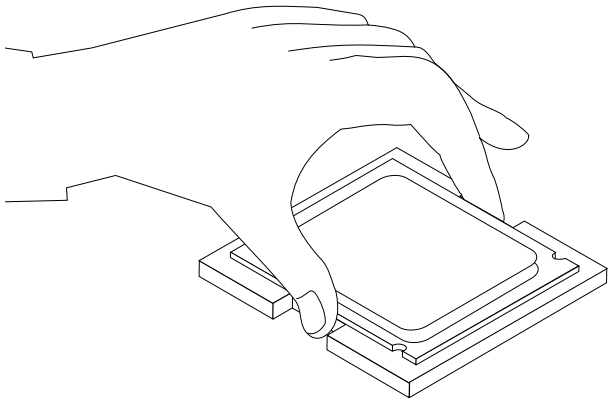

Notes:

a. Your microprocessor and socket might look different than the one illustrated.

b. Note the orientation of the microprocessor in the socket. Look for the small triangle on one corner of the microprocessor. This is important when reinstalling the microprocessor on the system board.

c. Do not drop anything onto the microprocessor socket while it is exposed. The socket pins must be kept as clean as possible.

6. When installing the microprocessor make sure that the small handle is in the vertical position.
7. Holding the new microprocessor **1** with your fingers, remove the protective cover **2** that protects the microprocessor contacts.

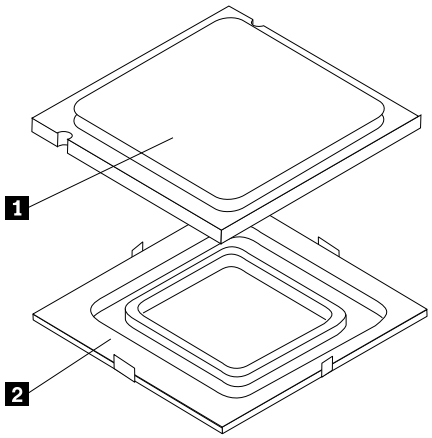

8. Holding the microprocessor with your fingers, position the microprocessor so that the triangle **1** is properly aligned with the socket.

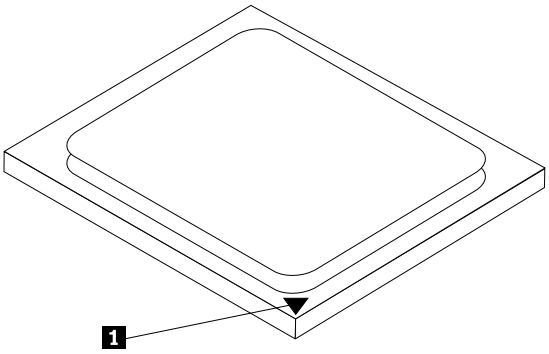

9. Lower the microprocessor straight down into the socket.

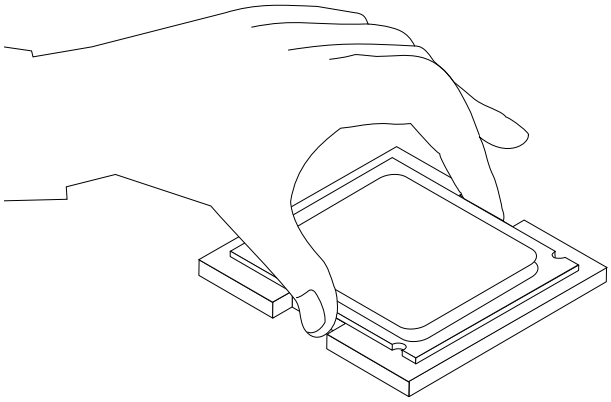

Note: Install the black protective cover that was removed from the new microprocessor onto the defective microprocessor after the installation is complete.

10. Secure the microprocessor in the socket by pivoting the small handle downward. Be sure to lock it into position.
11. Position the heat sink on the retention module so that the four screws are aligned with the posts on the system board. Tighten the four screws to secure the heat sink to the system board.

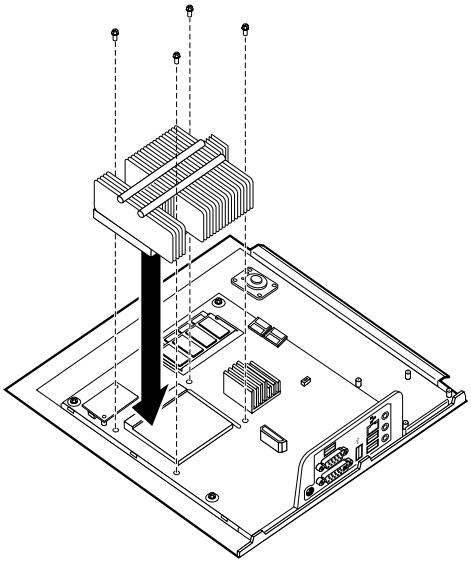

12. Go to “Completing the FRU replacement” on page 81.

Replacing the system board

This section provides instructions on how to replace the system board.

1. Open the computer cover. See “Opening the cover” on page 68.
2. Take note of the location of all cable connections on the system board and disconnect all cables. See “System board locations” on page 68.
3. Remove the screws that secure the system board to the cover.
4. Lift the system board off of the cover.
5. Remove the memory modules from the failing system board and install them in the same location on the new system board.

6. If the system board has a modem daughter card installed, remove it from the failing system board and install it on the new system board. See “Replacing the modem” on page 76.
7. Remove the heat sink and microprocessor from the failing system board and install them on the new system board. See “Replacing the microprocessor” on page 70.

   Note: You might have to install a new retention module on the new system board.
8. Position the new system board in the chassis so that the screw holes are aligned with the mounting studs.
9. Install and tighten the screws that secure the system board to the chassis.
10. Reconnect all cables to the system board. See “System board locations” on page 68.
11. Go to “Completing the FRU replacement” on page 81

Replacing a hard disk drive

This section provides instructions on how to replace the hard disk drive.

Important

When a new hard disk drive is installed, a set of *Product Recovery* discs might be required. The set of *Product Recovery* discs enable the contents of the hard disk to be restored to the same state as when the computer was originally shipped from the factory. For more information on recovering factory-installed software, refer to "Recovering Software" in the *User Guide*.

To replace the hard disk drive:

1. Open the computer cover. See “Opening the cover” on page 68.
2. Disconnect the power cable from the optical drive.
3. Place your finger on the tab located on the front of the hard disk drive and push upward. Then press inward on the side tabs and pivot the hard disk drive upward to remove.

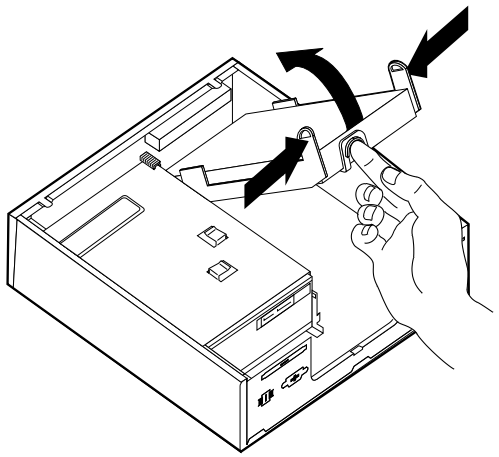

4. Remove the failing hard disk drive from the chassis.
5. Disconnect the signal and power cables from the hard disk drive.
6. Remove the hard disk drive from the plastic bracket by flexing the sides of the bracket enough to slide it free of the hard disk drive.
7. To install the new hard disk drive into the plastic bracket **1**, flex the bracket and align the pins on the bracket with the holes in the hard disk drive. Do not touch the circuit board **2** on the bottom of the hard disk drive.

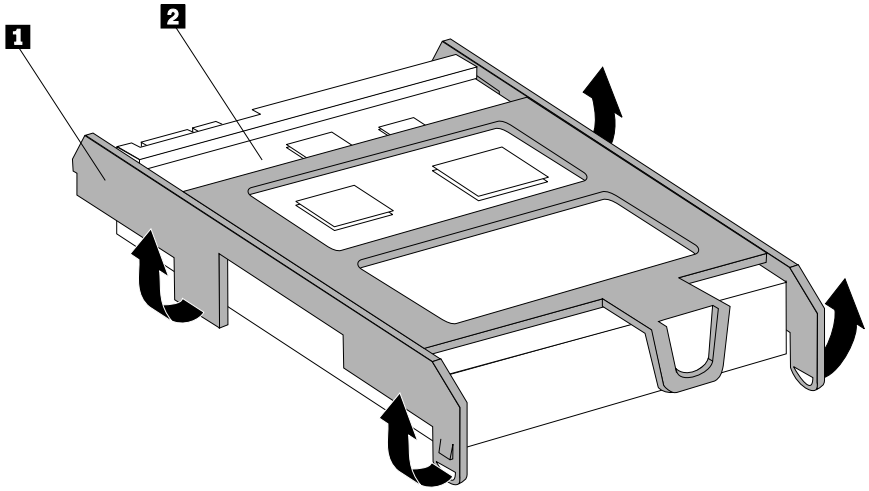

8. Connect the signal and power cables to the rear of the new hard disk drive.
9. Slide the new hard disk drive into the drive bay until it snaps into position.
10. Reconnect the power cable to the optical drive.
11. Go to “Completing the FRU replacement” on page 81.

Replacing an optical drive

This section provides instructions on how to replace an optical drive.

1. Open the computer cover. See “Opening the cover” on page 68.
2. Remove the front bezel by releasing the two tabs and pivoting the bezel forward to remove completely.

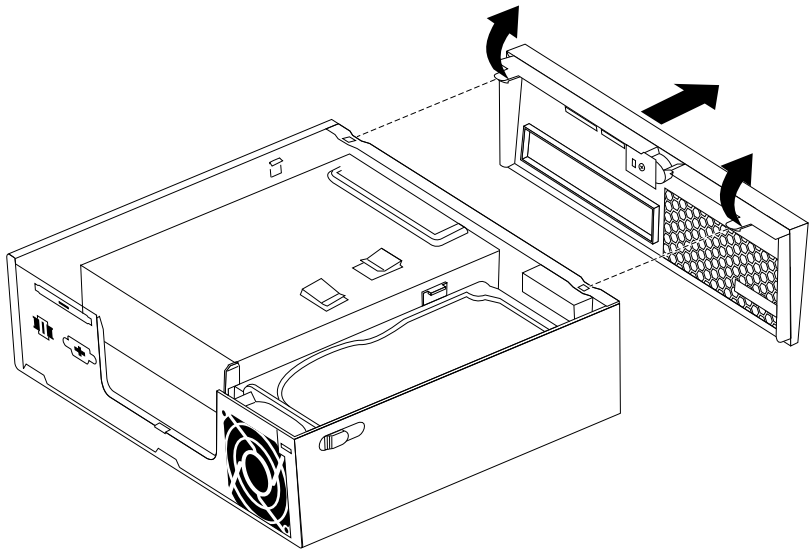

3. Disconnect the signal and power cables from the rear of the optical drive.
4. Press the blue release button and remove the optical drive out the front of the computer.

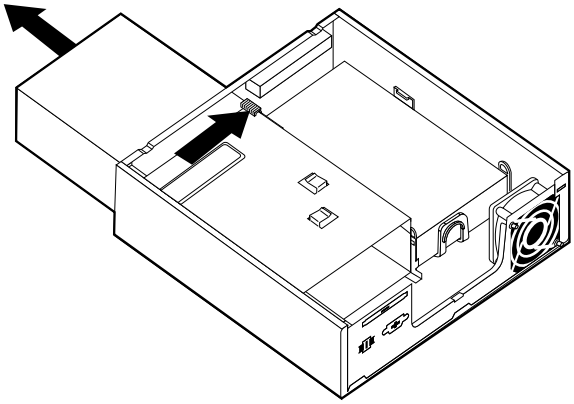

5. Remove the retainer bracket from the failing drive and install it on the new optical drive.

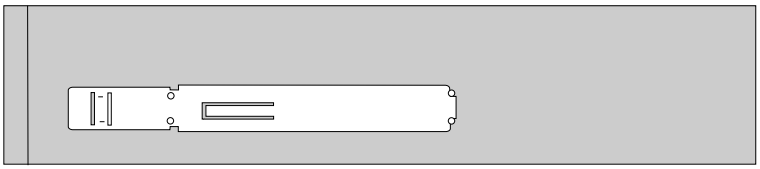

6. Slide the new optical drive into the drive bay until it snaps into position.

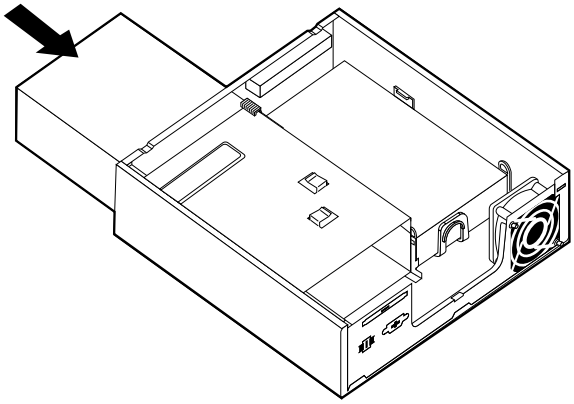

7. Connect the signal and power cables to the drive.
8. Replace the front bezel.
9. Go to “Completing the FRU replacement” on page 81.

Replacing a memory module

This section provides instructions on how to replace a memory module.

1. Open the computer cover. See “Opening the cover” on page 68.
2. Locate the memory connector. See “System board locations” on page 68.
3. Remove the memory module being replaced by opening the retaining clips as shown.

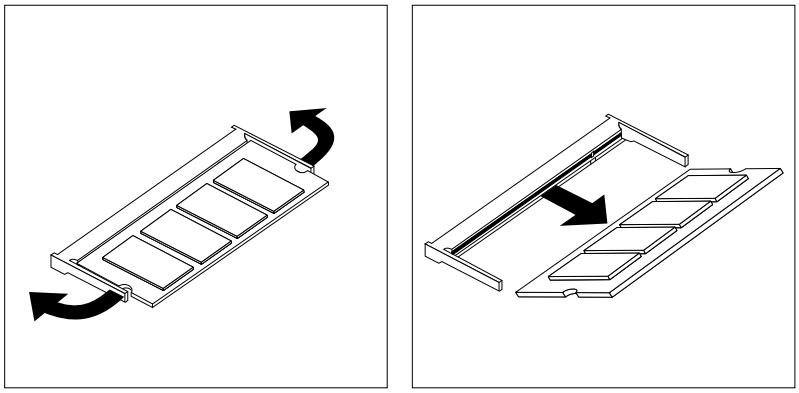

4. Insert the notched end 2 of the memory module into the socket 1. Press the memory module firmly, and pivot the memory module until it snaps into place. Make sure that the memory module is firmly fixed in the connector and does not move easily.

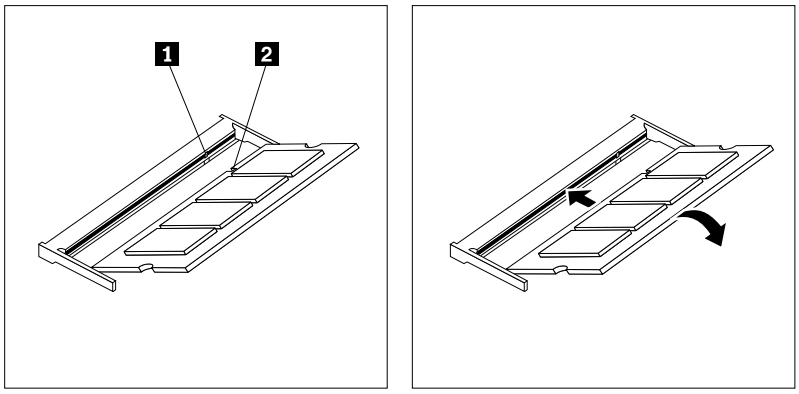

5. Go to “Completing the FRU replacement” on page 81.

Replacing the modem

This section provides instructions on how to replace the modem.

1. Open the computer cover. See “Opening the cover” on page 68.
2. Locate the MDC connector. See “System board locations” on page 68. The modem card 1 will be connected to the MDC connector.

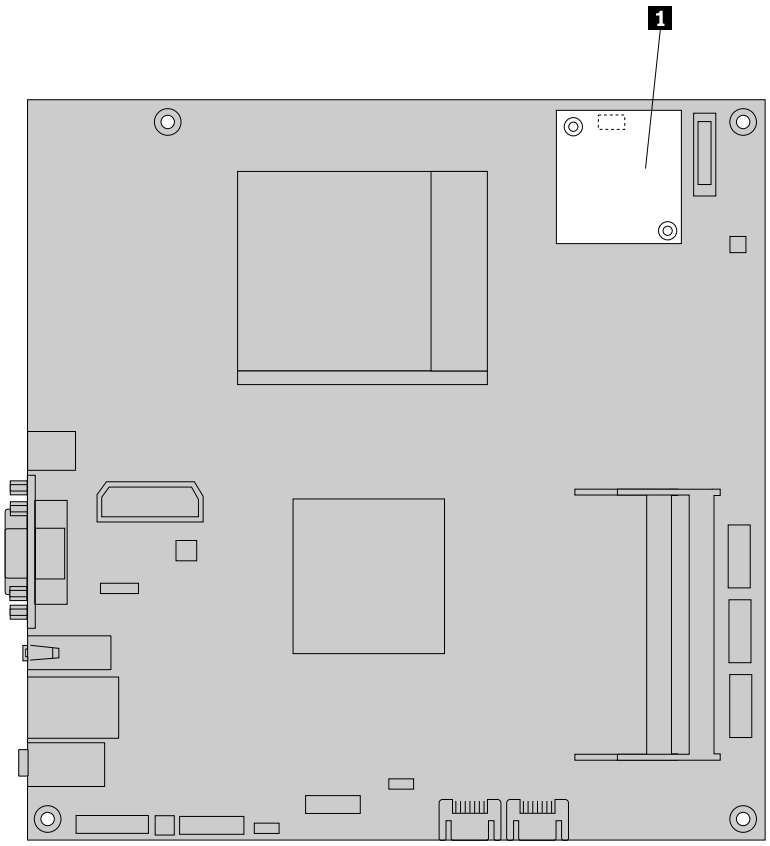

3. Remove the two screws that secure the modem card to the system board.
4. Disconnect the modem card from the system board.

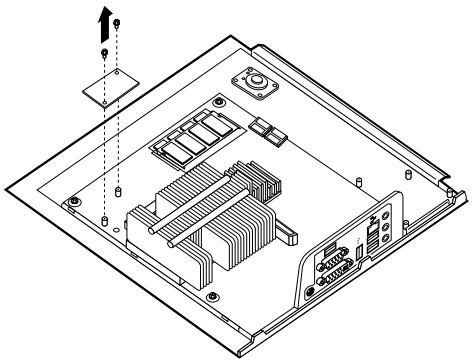

5. Disconnect the RJ11 modem cable from the modem card.
6. Connect the RJ11 modem cable to the new modem card.
7. Install the new modem card to the MDC connector on the system board by aligning the holes in the modem card with the pins in the system board.
8. Install the two screws to secure the modem card to the system board.
9. Go to “Completing the FRU replacement” on page 81.

Replacing the Express card assembly

This section provides instructions on how to replace the Express card assembly.

1. Open the computer cover. See “Opening the cover” on page 68.
2. Locate the Express card assembly. See “Locating components” on page 66

3. Disconnect the cable connected to the Express card.
4. Remove the four screws that secure the Express card assembly to the Chassis.
5. Remove the Express card assembly from the system board.

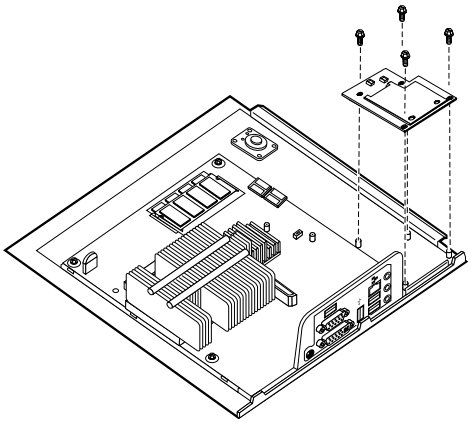

6. Install the new Express card assembly into the chassis by aligning the holes in the Express card assembly with the pins in the chassis.
7. Install the four screws to secure the Express card assembly to the chassis.
8. Reconnect the cable to the Express card assembly.
9. Go to “Completing the FRU replacement” on page 81.

Replacing the Media Card Reader

This section provides instructions on how to replace the Media Card Reader.

1. Open the computer cover. See “Opening the cover” on page 68.
2. Locate the Media Card Reader. See “Locating components” on page 66
3. Disconnect the Media Card Reader cable connected to the system board. See “System board locations” on page 68
4. Remove the screw that secures the Media Card Reader to the Chassis.

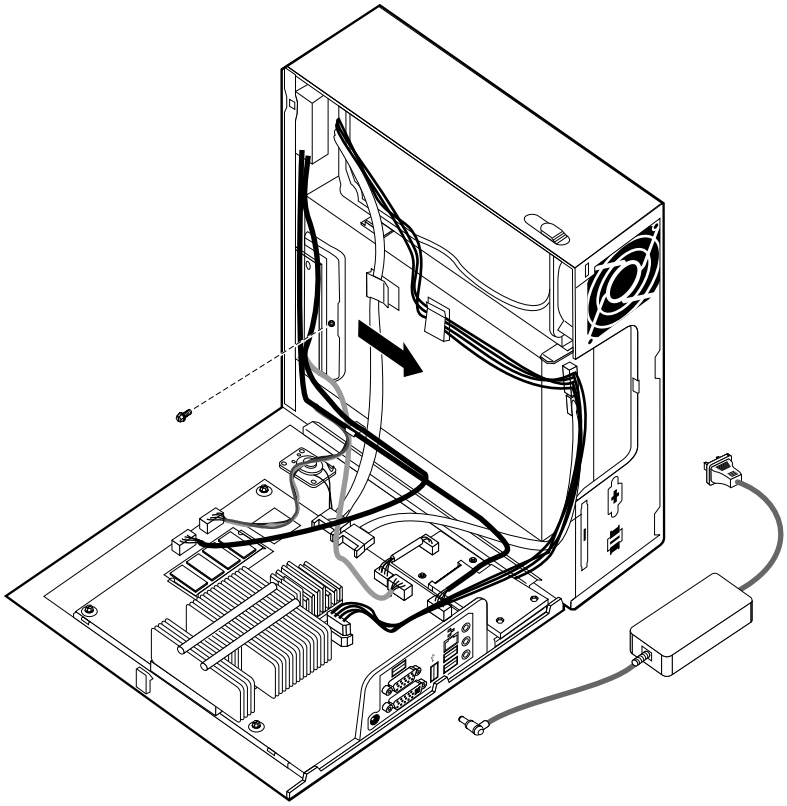

5. Remove the Media Card Reader from the chassis.
6. Install the new Media Card Reader into the chassis and align the screw-hole in the Media Card Reader with the hole in the chassis.
7. Install the screw to secure the Media Card Reader to the chassis.
8. Connect the Media Card Reader cable to the system board.
9. Go to “Completing the FRU replacement” on page 81.

Replacing the system fan assembly

This section provides instructions on how to replace the system fan assembly.

Note: When you receive your new system fan assembly, you will receive new rubber mounts.

1. Open the computer cover. See “Opening the cover” on page 68.
2. Locate the system fan connector. See “System board locations” on page 68.
3. Disconnect the system fan assembly cable from the system board. See “System board locations” on page 68.
4. You might have to remove the hard disk drive to gain access to the system fan. See “Replacing a hard disk drive” on page 73.
5. Remove the two rubber mounts from the system fan assembly that connect to the chassis by breaking them or cutting them with a pair of scissors. Once this has been done, remove the rubber mounts from the rear of the chassis.
6. Pull the system fan assembly outward from the chassis. Then lift the system fan assembly out of the chassis.

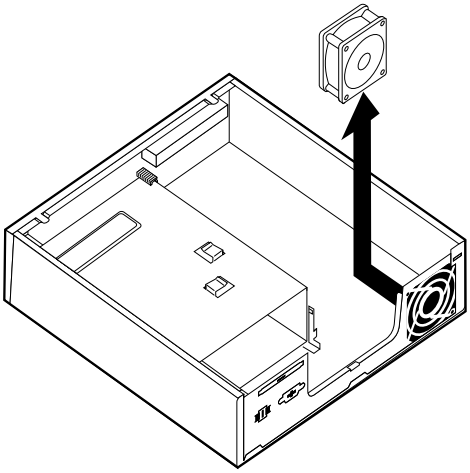

7. When installing your new system fan assembly, use the new rubber mounts that come with the new system fan.
8. Install the two short rubber mounts in the new system fan assembly as shown.

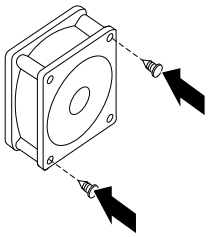

9. Install the two long rubber mounts into the rear of the chassis as shown. Push the mounts through the holes of the chassis. If necessary, pull the mounts through the holes from inside the chassis.
10. To install the new system fan assembly into the chassis, align the open holes in the system fan assembly with the long rubber mounts in the chassis. Pull the rubber mounts through the holes in the system fan assembly until the system fan is in place.

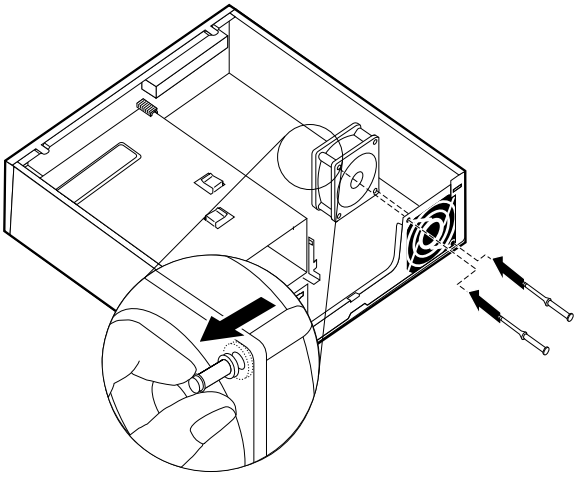

11. Once the system fan assembly is secure, you should remove the extra rubber for the mounts.
12. Connect the system fan assembly cable to the system fan connector on the system board.
13. Replace the hard disk drive, if it was removed.
14. Go to “Completing the FRU replacement” on page 81.

Completing the FRU replacement

After replacing the parts, you need to close the cover and reconnect cables, including telephone lines and power cords. Also, depending on the part that was replaced, you might need to confirm the updated information in the Setup Utility program. See Chapter 6 “Diagnostics, Test and Recovery Information” on page 39.

This section provides instructions on how to complete the parts replacement.

1. Ensure that all components have been reassembled correctly and that no tools or loose screws are left inside the computer. See “Locating components” on page 66 for the location of various components.
2. Make sure that the cables are routed correctly before closing the computer cover.

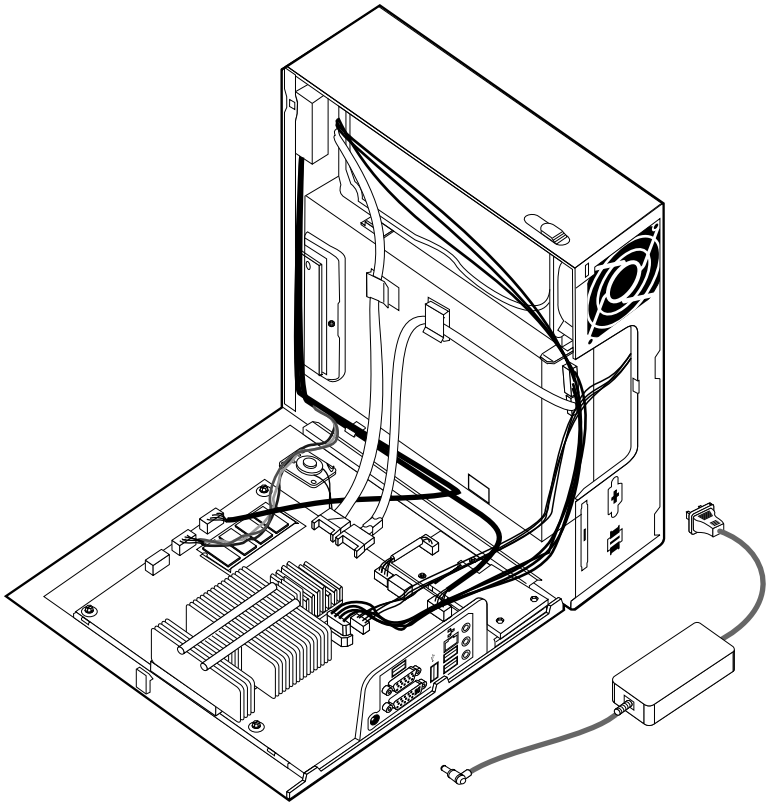

Important: Correctly route all power supply cables to avoid interference when closing the computer cover. Keep cables clear of the hinges and sides of the computer chassis.

3. Position the computer cover on the chassis so that the rail guide on the bottom of the cover engages the rail. Then, push the computer cover closed until it snaps into position.

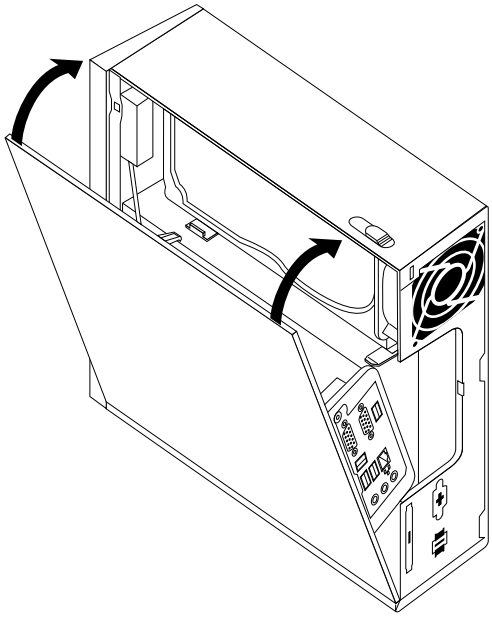

4. If a cover lock is installed, lock the cover.
5. Reconnect the external cables and power cords to the computer. See “Connectors on the rear of the computer” on page 66.
6. To update your configuration, see Chapter 6 “Diagnostics, Test and Recovery Information” on page 39.

Chapter 9. FRU lists

Attention: Read “Important information about replacing RoHS compliant FRUs” on page 1 before replacing any FRUs.

Note: In the following tables, a CRU (Customer Replaceable Unit) is identified as either "1", "2", or "N" in the CRU column. "N" means that the part is not a CRU, "1" means that the part is a Self-service CRU, and "2" means that the part is an Optional-service CRU.

Machine Type 6393

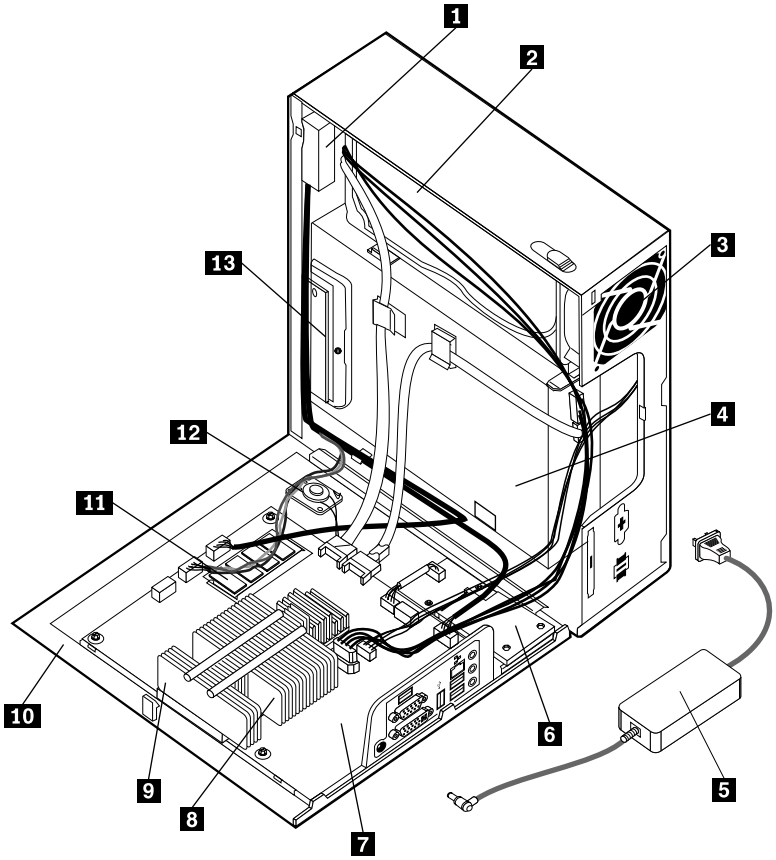

Item #	6393 FRUs	FRU#	CRU
1	Front audio/USB card and cable (included in Cables kit 41R8510) (all models)	41R8510	N
2	Hard disk drive, 80 GB 7200rpm SATA (models 12Q 14C 14V 11S 11D 11Y)	40Y9034	2
2	Hard disk drive, 160 GB 7200rpm SATA (models 15S 15D 15Y 15Q 15C 16Q 17S 17Y 18S 18Y)	40Y9035	2
2	Hard disk drive, 25 GB 7200rpm SATA (models 13B 13H)	40Y9036	2
2	Hard disk drive, 320 GB 7200rpm SATA (models)	87H4891	2
2	Hard disk drive, 500 GB 7200rpm SATA (models)	41X5582	2
2	Hard disk drive, 750 GB 7200rpm SATA (models)	43C3671	2

© Copyright Lenovo 2005, 2010

Item #	6393 FRUs	FRU#	CRU
2	Hard disk drive, 1TB 7200rpm SATA (models CTO)	45C5973	2
3	System fan (all models)	41R8511	2
4	DVD-ROM Drive - 16x/48x - SATA (models 12Q 14C 14V 11S 11D 11Y 15S 15D 15Y 15Q 15C 16Q 17S 17Y)	41N3325	2
4	DVD-ROM Drive - DVD-RW/CD-RW Rambo 8 (SATA) Matrix (models)	43C1042	2
4	DVD-ROM Drive - DVD-ROM/CD-RW Combo Drive - 48x/32x/48x/16x - SATA Matrix (models 13B 13H 18S 18Y)	42Y9353	2
5	Power Adapter, 120W AC/DC (models 12Q 14C 14V 11S 11D 11Y 13B 13H 15S 15D 15Y 15Q 15C 16Q 17S 17Y 18S 18Y)	41A9732	1
5	Power Adapter, 120W power adapter (models 12Q 14C 14V 11S 11D 11Y 13B 13H 15S 15D 15Y 15Q 15C 16Q 17S 17Y 18S 18Y)	41A9747	1
6	Express Card Assembly (all models)	41R8570	N
7	System board, Mini-ITX Intel (Q35, ICH9DO) (models)	46R3849	N
7	System board, non-AMT Mini-ITX Intel (Q35, ICH9DO) (models 12Q 14C 14V 11S 11D 11Y 13B 13H 15S 15D 15Y 15Q 15C 16Q 17S 17Y 18S 18Y)	46R3848	N
8	Microprocessor, Intel Conroe E6750 (Core2 Duo) 2.66GHz, G-0 Stepping, 65nm, 1333MHZ FSB, 4MB L2 (models)	45C6898	N
8	Microprocessor, Intel Conroe E6550 (Core2 Duo) 2.33GHz, G-0 Stepping, 65nm, 1333MHz FSB, 4MB L2 (models)	45C6899	N
8	Microprocessor, Intel Conroe E4500 (Core2 Duo) 2.20GHz, M-0 Stepping, 65nm, 800MHz FSB, 2MB L2 (models 15S 15D 15Y 15Q 15C)	45C6900	N
8	Microprocessor, Intel Conroe E2160 (Pentium D) 1.8GHz, M-0 Stepping, 65nm, 800MHz FSB, 1MB L2 (models 14C 14V)	45C6901	N
8	Microprocessor, Intel Conroe-L 440 (Celeron) 2.0GHz, A-1 Stepping, 65nm, 800MHz FSB, 512KB L2 (models 11S 11D 11Y 12Q 13B 13H)	45C6902	N
8	Microprocessor, Intel Wolfdale E8400 (Core2 Duo) 3.0GHz, C-0 Stepping, 45nm, 1333MHz FSB, 6MB L2 (models)	45C8499	N
8	Microprocessor, Intel Wolfdale E8200 (Core2 Duo) 2.66GHz, C-0 Stepping, 45nm, 1333MHz FSB, 6MB L2 (models)	45C8531	N
8	Microprocessor, E7200, 2.53GHz, 1066MHz FSB, 3MB L2 (models 18S 18Y)	46R4261	N
8	Microprocessor, E2200, 2.20GHz, 800MHz FSB, 1MB L2 (models 16Q 17S 17Y)	46R4260	N
9	Heat sink Intel (all models)	41R8545	2
10	Kit, Shell (all models)	41R8563	N
11	Memory module, 512MB DDR2 PC2-5300 (667MHz) SoDIMM (models 12Q 14C 14V 17S 17Y)	43C3814	2
11	Memory module, 1GB DDR2 PC2-5300 (667MHz) SoDIMM (models 11S 11D 11Y 13B 13H 15S 15D 15Y 15Q 15C 16Q 18S 18Y)	43C3815	2
11	Memory module, 2GB DDR2 PC2-5300 (667MHz) SoDIMM (models)	43C6489	2
12	Internal speaker (all models)	41R8517	2
13	Media card reader (all models)	41R8568	N

The FRUs listed in the following tables are not illustrated.

6393 FRUs	FRU#	CRU
Hard Disk Drive tray (all models)	41R8518	2
Shield Kit (all models)	41R8543	N
Cable, C2 Swtich/Housing assembly (all models)	41R8544	N
Cable, Serial (all models)	41R8548	N
USB Cable (all models)	41R8560	N
PWR/LED Cable Assembly (all models)	41R8555	N

6393 Keyboards (USB Preferred Pro)	FRU#	CRU
US English (models 12Q 15Q 16Q)	41A5289	1
Arabic(models)	41A5290	1
Arabic/French (models)	41A5291	1
Belgian/French (models)	41A5292	1
Belgian/UK (models)	41A5293	1
Brazilian (models)	41A5294	1
Bulgarian (models)	41A5295	1
Hong Kong/Taiwan (models)	41A5296	1
Czech (models)	41A5297	1
Danish (models)	41A5298	1
Dutch (models)	41A5299	1
French (models)	41A5300	1
French Canadian 445 (models)	41A5301	1
French Canadian 58 (models)	41A5302	1
German (models)	41A5303	1
Greek (models)	41A5304	1
Greek/US (models)	41A5305	1
Hebrew (models)	41A5306	1
Hungarian (models)	41A5307	1
Iceland (models)	41A5308	1
Italian (models)	41A5309	1
Japanese (models)	41A5310	1
Korean (models)	41A5311	1
LA Spanish (models)	41A5312	1
Norwegian (models)	41A5313	1
Polish (models)	41A5314	1
Portuguese (models)	41A5315	1
Romanian 446 (models)	41A5316	1
Romanian 096 (models)	41A5317	1
Russian/Cyrillic(models)	41A5318	1
Serbian/Cyrillic (models)	41A5319	1

6393 Keyboards (USB Preferred Pro)	FRU#	CRU
Slovak (models)	41A5320	1
Spanish (models 11S 11D 11Y 15S 15D 15Y 17S 17Y 18S 18Y)	41A5321	1
Swedish/Finn (models)	41A5322	1
Swiss (models)	41A5323	1
Thailand (models)	41A5324	1
Turkish 440 (models)	41A5325	1
Turkish 179 (models)	41A5326	1
UK English (models)	41A5327	1
US Euro (models)	41A5328	1
Slovenian (models)	41A5329	1

6393 Keyboard (USB Preferred Pro Fingerprint Keyboard)	FRU#	CRU
US (models)	41A5248	1
Arabic (models)	41A5249	1
Arabic/French (models)	41A5250	1
Belgian/French (models)	41A5251	1
Belgian/UK (models)	41A5252	1
Brazil/Portuguese (models)	41A5253	1
Bulgarian (models)	41A5254	1
Chinese/US (models)	41A5255	1
Czech (models)	41A5256	1
Danish (models)	41A5257	1
Dutch (models)	41A5258	1
French (models)	41A5259	1
French Canadian 445 (models)	41A5260	1
French Canadian 58 (models)	41A5261	1
German (models)	41A5262	1
Greek (models)	41A5263	1
Greek/US (models)	41A5264	1
Hebrew (models)	41A5265	1
Hungarian (models)	41A5266	1
Iceland (models)	41A5267	1
Italian (models)	41A5268	1
Japanese (models)	41A5269	1
Korean (models)	41A5270	1
LA Spanish (models)	41A5271	
Norwegian (models)	41A5272	1
Polish (models)	41A5273	1
Portugese (models)	41A5274	1

6393 Keyboard (USB Preferred Pro Fingerprint Keyboard)	FRU#	CRU
Romanian 446 (models)	41A5276	1
Romanian 96 (models)	41A5275	1
Russian/Cyrilic (models)	41A5277	1
Serbian/Cyrilic (models)	41A5278	1
Slovak (models)	41A5279	1
Spanish (models)	41A5280	1
Swedish/Finn (models)	41A5281	1
Swiss, F/G (models)	41A5282	1
Thailand (models)	41A5283	1
Turkish 179 (models)	41A5284	1
Turkish 440 (models)	41A5285	1
UK (models)	41A5286	1
US Euro(models)	41A5287	1
Slovenian (models)	41A5288	1

6393 mice	FRU#	CRU
Optical Wheel Mouse (400DPI, USB) (models 12Q 14C 14V 11S 11D 11Y 13B 13H 15S 15D 15Y 15Q 15C 16Q 17S 17Y 18S 18Y)	41U3013	1
Optical Wheel Mouse (400DPI, USB) (models 12Q 14C 14V 11S 11D 11Y 13B 13H 15S 15D 15Y 15Q 15C 16Q 17S 17Y 18S 18Y)	41U3030	1
ScrollPoint Optical Mouse (800DPI, USB) (models)	41U3019	1

6393 Adapters and miscellaneous FRUs	FRU#	CRU
Modem Daughter Card (MDC 1.5) Kit (models)	39T0495	2
Modem Daughter Card (MDC 1.5) Kit Internal cable/RJ11 (models)	41R8522	2
Lenovo Branded speakers - 2 piece--primary (models)	41A5331	1
Lenovo Branded speakers - 2 piece--secondary (models)	41A5334	1
Speaker power brick (models)	89P8571	1
Thermal Grease Syringe (models)	91P8835	N
Vertical PC stand (VPC) for Blue 4.5L chassis (models)	41R4770	2

6393 Power Cords	FRU#	CRU
Power cord - US/Canada (models 11S 11D 15S 15D 18S 17S)	42T5004	1
Power cord - Japan (models)	42T5011	1
Power cord - Argentina (models 11Y 15Y 17Y 18Y)	42T5017	1
Power cord - Brazil (models)	42T5174	1
Power cord - Europe (Germany) (models)	42T5029	1
Power cord - UK (models)	42T5035	1
Power cord - Denmark (models)	42T5041	1
Power cord - Switzerland (models)	42T5044	1

6393 Power Cords	FRU#	CRU
Power cord - Italy (models)	42T5047	1
Power cord - Australia / New Zealand (models)	42T5050	1
Power cord - South Africa (models)	42T5056	1
Power cord - Israel (models)	42T5062	1
Power cord - China (PRC) (models 14C 15C)	42T5065	1
Power cord - Taiwan (models)	42T5071	1
Power cord - Korea (models)	42T5077	1
Power cord - India (models 12Q 15Q 16Q)	42T5083	1
Power cord - Thailand (models)	42T4406	1
Power cord - US/Canada--optional second source (models 11S 11D 15S 15D 18S 17S)	42T5089	1
Power cord - Japan-optional second source (models)	42T5096	1
Power cord - Argentina -optional second source (models 11Y 15Y 17Y 18Y)	42T5102	1
Power cord - Brazil (new type) -optional second source (models)	42T5177	1
Power cord - Europe (Germany) -optional second source (models)	42T5114	1
Power cord - UK -optional second source (models)	42T5120	1
Power cord - Denmark -optional second source (models)	42T5126	1
Power cord - Switzerland -optional second source (models)	42T5129	1
Power cord - Italy -optional second source (models)	42T5132	1
Power cord - Australia/New Zealand -optional second source (models)	42T5135	1
Power cord - South Africa -optional second source (models)	42T5141	1
Power cord - Israel -optional second source (models)	42T5147	1
Power cord - China (PRC) -optional second source (models 14C 15C)	42T5150	1
Power cord - Taiwan-optional second source (models)	42T5156	1
Power cord - Korea-optional second source (models)	42T5162	1
Power cord - India-optional second source (models 12Q 15Q 16Q)	42T5168	1
Power cord - Thailand-optional second source (models)	42T4400	1

6393 Windows XP Home Recovery CDs	FRU#	CRU
US/UK/AP/TH (models)	45R6005	1
FR/CF (models)	45R6006	1
GR (models)	45R6007	1
IT (models)	45R6010	1
BR (models)	45R6009	1
SP/LA (models)	45R6008	1
DK (models)	45R6014	1
NL (models)	45R6015	1
AE (models)	45R6020	1
SV (models)	45R6013	1
HE (models)	45R6018	1

6393 Windows XP Home Recovery CDs	FRU#	CRU
FI (models)	45R6017	1
NO (models)	45R6012	1
PL (models)	45R6019	1
PO (models)	45R6030	1
RU (models)	45R6021	1
RE (models)	45R6029	1
HU (models)	45R6023	1
CZ (models)	45R6016	1
TR (models)	45R6022	1
GK (models)	45R6024	1
Japanese (models)	45R6011	1
Simplified Chinese (models)	45R6025	1
Taiwan-TC (models)	45R6026	1
Hong Kong-TC (models)	45R6027	1
Korea (models)	45R6028	1

6393 Windows XP Pro Recovery CDs	FRU#	CRU
US/UK/AP/TH (models)	45R5979	1
FR/CF (models)	45R5980	1
GR (models)	45R5981	1
IT (models)	45R5984	1
BR (models)	45R5983	1
SP/LA (models)	45R5982	1
DK (models)	45R5988	1
NL (models)	45R5989	1
AE (models)	45R5994	1
SV (Swedish) (models)	45R5987	1
HE (models)	45R5992	1
FI (models)	45R5991	1
NO (models)	45R5986	1
PL (models)	45R5993	1
PO (models)	45R6004	1
RU (models)	45R5995	1
RE (models)	45R6003	1
HU (models)	45R5997	1
CZ (models)	45R5990	1
TR (models)	45R5996	1
GK (models)	45R5998	1
Japanese (models)	45R5985	1

6393 Windows XP Pro Recovery CDs	FRU#	CRU
Simplified Chinese (models)	45R5999	1
Taiwan-TC (models)	45R6000	1
Hong Kong-TC (models)	45R6001	1
Korea (models)	45R6002	1
Multilingual 1 XP-P -- EN, NL, FR, GR, IT (models)	45R5977	1
Multilingual 2 XP-P -- EN, DK, FI, NO, SV (models)	45R5978	1

6393 Vista Home Basic 32 Recovery DVDs	FRU#	CRU
English (models 13H)	46R7098	1
Russian English (models)	46R7099	1
French (models)	46R7100	1
German (models)	46R7101	1
Spanish (models)	46R7102	1
Brazilian (models)	46R7103	1
Italian (models)	46R7104	1
Japanese (models)	46R7105	1
Norwegian (models)	46R7106	1
Swedish (models)	46R1086	1
Danish (models)	46R7107	1
Dutch (models)	46R1088	1
Czech (models)	46R1089	1
Finnish (models)	46R1090	1
Polish (models)	46R1091	1
Russian (models)	46R7108	1
Turkish (models)	46R1093	1
Hungarian (models)	46R1094	1
Greek (models)	46R1095	1
Simplified Chinese (models)	46R7109	1
Taiwan (models)	46R7110	1
HongKong (models)	46R7111	1
Korea (models)	46R1099	1
Slovenian (models)	46R1100	1
Hebrew (models)	46R1101	1
Portuguese (models)	46R1102	1
Arabic Localized (models)	46R1103	1
Slovakia (models)	46R1104	1

6393 Vista Business 32 Recovery DVDs	FRU#	CRU
English (models 15Q)	46R7070	1
Russian (models)	46R7071	1
French (models)	46R7072	1
German (models)	46R7073	1
Spanish (models 15S 15D 15Y 17S 17Y 18S 18Y)	46R7074	1
Brazilian (models)	46R7075	1
Italian (models)	46R7076	1
Japanese (models)	46R7077	1
Norwegian (models)	46R7078	1
Swedish (models)	46R1028	1
Danish (models)	46R7079	1
Dutch (models)	46R1030	1
Czech (models)	46R1031	1
Finnish (models)	46R1032	1
Polish (models)	46R1033	1
Russian (models)	46R7080	1
Turkish (models)	46R1035	1
Hungarian (models)	46R1036	1
Greek (models)	46R1037	1
Simplified Chinese (models 15C)	46R7081	1
Trad Chinese (models)	46R7082	1
Trad Chinese (models)	46R7083	1
Korean (models)	46R1041	1
Slovenian (models)	46R1042	1
Romanian (models)	46R1043	1
Portuguese (models)	46R1044	1
Serbian - Latin (models)	46R1045	1
Slovakian (models)	46R1046	1
Arabic Localized (models)	46R1047	1
Hebrew (models)	46R1048	1

6393 Vista Ultimate 32 Recovery DVDs	FRU#	CRU
English (models)	46R7112	1
Russian (models)	46R7113	1
French (models)	46R7114	1
German (models)	46R7115	1
Spanish (models)	46R7116	1
Brazilian (models)	46R7117	1
Italian (models)	46R7118	1

6393 Vista Ultimate 32 Recovery DVDs	FRU#	CRU
Japanese (models)	46R7119	1
Norwegian (models)	46R7120	1
Swedish (models)	46R1114	1
Danish (models)	46R7121	1
Dutch (models)	46R1116	1
Czech (models)	46R1117	1
Finnish (models)	46R1118	1
Polish (models)	46R1119	1
Russian (models)	46R7122	1
Turkish (models)	46R1121	1
Hungarian (models)	46R1122	1
Greek (models)	46R1123	1
Simplified Chinese (models)	46R7123	1
Traditional Chinese (models)	46R7124	1
Traditional Chinese (models)	46R7125	1
Korean (models)	46R1127	1
Slovenian (models)	46R1128	1
Hebrew (models)	46R1129	1
Portuguese (models)	46R1130	1
Slovakian (models)	46R1131	1
Arabic Localized (models)	46R1132	1

6393 Vista Business 64 Recovery DVDs	FRU#	CRU
English (models)	46R7084	1
Russian English (models)	46R7085	1
French (models)	46R7086	1
German (models)	46R7087	1
Spanish (models)	46R7088	1
Brazilian (models)	46R7089	1
Italian (models)	46R7090	1
Japanese (models)	46R7091	1
Norwegian (models)	46R7092	1
Swedish (models)	46R1058	1
Danish (models)	46R7093	1
Dutch (models)	46R1060	1
Czech (models)	46R1061	1
Finnish (models)	46R1062	1
Polish (models)	46R1063	1
Russian (models)	46R7094	1

6393 Vista Business 64 Recovery DVDs	FRU#	CRU
Turkish (models)	46R1065	1
Hungarian (models)	46R1066	1
Greek (models)	46R1067	1
Simplified Chinese (models)	46R7095	1
Taiwan (models)	46R7096	1
Hong Kong (models)	46R7097	1
Korea (models)	46R1071	1
Slovenian (models)	46R1072	1
Arabic Localized (models)	46R1073	1
Hebrew (models)	46R1074	1
Portuguese (models)	46R1075	1
Slovakian (models)	46R1076	1

Machine Type 6394

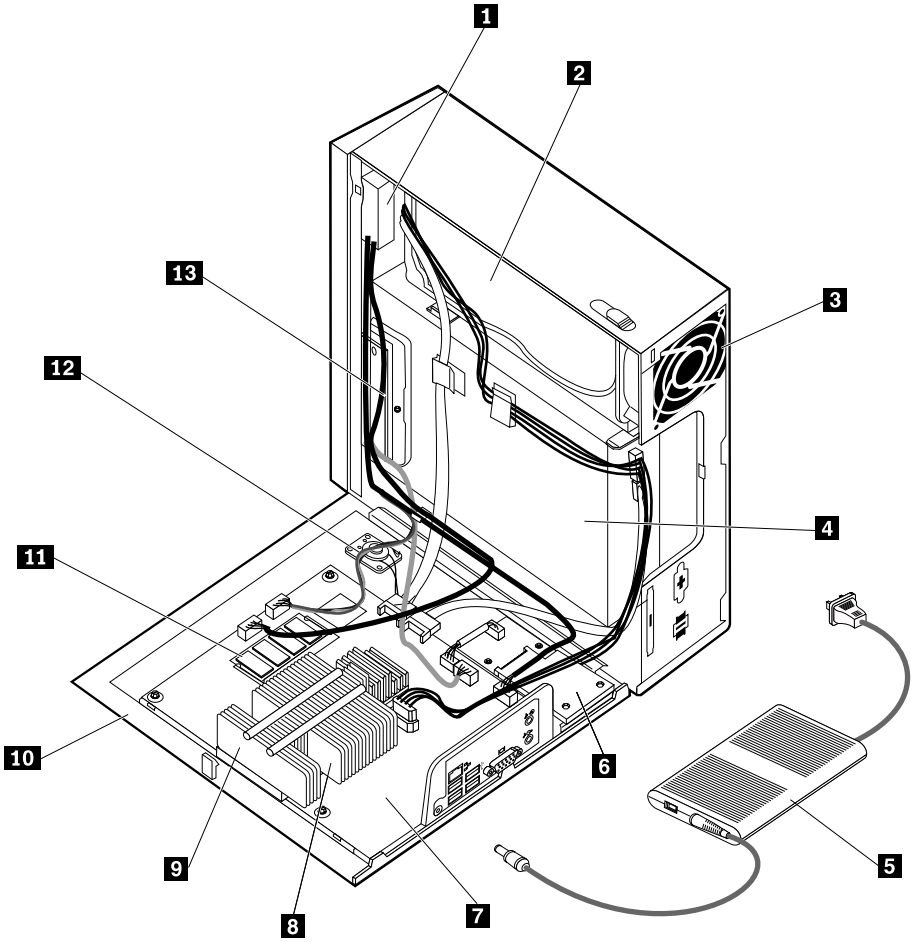

Item #	6394 FRUs	FRU#	CRU
1	Front audio/USB card and cable (included in Cables kit 41R8510) (models)	41R8510	N
2	Hard disk drive, 80 GB 7200rpm SATA (models)	40Y9034	2
2	Hard disk drive, 160 GB 7200rpm SATA (models)	40Y9035	2
2	Hard disk drive, 25 GB 7200rpm SATA (models)	40Y9036	2
2	Hard disk drive, 320 GB 7200rpm SATA (models)	87H4891	2
2	Hard disk drive, 500 GB 7200rpm SATA (models)	41X5582	2
2	Hard disk drive, 750 GB 7200rpm SATA (models)	43C3671	2
2	Hard disk drive, 1TB 7200rpm SATA (models CTO)	45C5973	2
3	System fan (models)	41R8511	2
4	DVD-ROM Drive - 16x/48x - SATA (models)	41N3325	2
4	DVD-ROM Drive - DVD-RW/CD-RW Rambo 8 (SATA) Matrix (models)	43C1042	2
4	DVD-ROM Drive - DVD-ROM/CD-RW Combo Drive - 48x/32x/48x/16x - SATA Matrix (models)	42Y9353	2
5	Power Adapter, 120W AC/DC (models)	41A9732	1
5	Power Adapter, 120W power adapter (models)	41A9747	1
6	Express Card Assembly (models)	41R8570	N
7	System board, Mini-ITX Intel (Q35, ICH9DO) (models)	46R3849	N
7	System board, non-AMT Mini-ITX Intel (Q35, ICH9DO) (models)	46R3848	N
8	Microprocessor, Intel Conroe E6750 (Core2 Duo) 2.66GHz, G-0 Stepping, 65nm, 1333MHZ FSB, 4MB L2 (models)	45C6898	N
8	Microprocessor, Intel Conroe E6550 (Core2 Duo) 2.33GHz, G-0 Stepping, 65nm, 1333MHz FSB, 4MB L2 (models)	45C6899	N
8	Microprocessor, Intel Conroe E4500 (Core2 Duo) 2.20GHz, M-0 Stepping, 65nm, 800MHz FSB, 2MB L2 (models)	45C6900	N
8	Microprocessor, Intel Conroe E2160 (Pentium D) 1.8GHz, M-0 Stepping, 65nm, 800MHz FSB, 1MB L2 (models)	45C6901	N
8	Microprocessor, Intel Conroe-L 440 (Celeron) 2.0GHz, A-1 Stepping, 65nm, 800MHz FSB, 512KB L2 (models)	45C6902	N
8	Microprocessor, Intel Wolfdale E8400 (Core2 Duo) 3.0GHz, C-0 Stepping, 45nm, 1333MHz FSB, 6MB L2 (models)	45C8499	N
8	Microprocessor, Intel Wolfdale E8200 (Core2 Duo) 2.66GHz, C-0 Stepping, 45nm, 1333MHz FSB, 6MB L2 (models)	45C8531	N
8	Microprocessor, E7200, 2.53GHz, 1066MHz FSB, 3MB L2 (models)	46R4261	N
8	Microprocessor, E2200, 2.20GHz, 800MHz FSB, 1MB L2 (models)	46R4260	N
9	Heat sink Intel (models)	41R8545	2
10	Kit, shell (models)	41R8563	N
11	Memory module, 512MB DDR2 PC2-5300 (667MHz) SoDIMM (models)	43C3814	2
11	Memory module, 1GB DDR2 PC2-5300 (667MHz) SoDIMM (models)	43C3815	2
11	Memory module, 2GB DDR2 PC2-5300 (667MHz) SoDIMM (models)	43C6489	2
12	Internal speaker (models)	41R8517	2
13	Media card reader (models)	41R8568	N

The FRUs listed in the following tables are not illustrated.

6394 FRUs	FRU#	CRU
Hard disk drive tray (models)	41R8518	2
Shield Kit (all models)	41R8543	N
Cable, C2 Swtich/Housing assembly (models)	41R8544	N
Cable, Serial (models)	41R8548	N
USB cable (models)	41R8560	N
PWR/LED cable assembly (models)	41R8555	N

6394 Keyboards (USB Preferred Pro)	FRU#	CRU
US English (models)	41A5289	1
Arabic (models)	41A5290	1
Arabic/French (models)	41A5291	1
Belgian/French (models)	41A5292	1
Belgian/UK (models)	41A5293	1
Brazilian (models)	41A5294	1
Bulgarian (models)	41A5295	1
Hong Kong/Taiwan (models)	41A5296	1
Czech (models)	41A5297	1
Danish (models)	41A5298	1
Dutch (models)	41A5299	1
French (models)	41A5300	1
French Canadian 445 (models)	41A5301	1
French Canadian 58 (models)	41A5302	1
German (models)	41A5303	1
Greek (models)	41A5304	1
Greek/US (models)	41A5305	1
Hebrew (models)	41A5306	1
Hungarian (models)	41A5307	1
Iceland (models)	41A5308	1
Italian (models)	41A5309	1
Japanese (models)	41A5310	1
Korean (models)	41A5311	1
LA Spanish (models)	41A5312	1
Norwegian (models)	41A5313	1
Polish (models)	41A5314	1
Portuguese (models)	41A5315	1
Romanian 446 (models)	41A5316	1
Romanian 096 (models)	41A5317	1
Russian/Cyrillic (models)	41A5318	1

6394 Keyboards (USB Preferred Pro)	FRU#	CRU
Serbian/Cyrillic (models)	41A5319	1
Slovak (models)	41A5320	1
Spanish (models)	41A5321	1
Swedish/Finn (models)	41A5322	1
Swiss (models)	41A5323	1
Thailand (models)	41A5324	1
Turkish 440 (models)	41A5325	1
Turkish 179 (models)	41A5326	1
UK English (models)	41A5327	1
US European (models)	41A5328	1
Slovenian (models)	41A5329	1

6394 Keyboard (USB Preferred Pro Fingerprint Keyboard)	FRU#	CRU
US (models)	41A5248	1
Arabic (models)	41A5249	1
Arabic/French (models)	41A5250	1
Belgian/French (models)	41A5251	1
Belgian/UK (models)	41A5252	1
Brazil/Portuguese (models)	41A5253	1
Bulgarian (models)	41A5254	1
Chinese/US (models)	41A5255	1
Czech (models)	41A5256	1
Danish (models)	41A5257	1
Dutch (models)	41A5258	1
French (models)	41A5259	1
French Canadian 445 (models)	41A5260	1
French Canadian 58 (models)	41A5261	1
German (models)	41A5262	1
Greek (models)	41A5263	1
Greek/US (models)	41A5264	1
Hebrew (models)	41A5265	1
Hungarian (models)	41A5266	1
Iceland (models)	41A5267	1
Italian (models)	41A5268	1
Japanese (models)	41A5269	1
Korean (models)	41A5270	1
LA Spanish (models)	41A5271	
Norwegian (models)	41A5272	1
Polish (models)	41A5273	1

6394 Keyboard (USB Preferred Pro Fingerprint Keyboard)	FRU#	CRU
Portuguese (models)	41A5274	1
Romanian 446 (models)	41A5276	1
Romanian 96 (models)	41A5275	1
Russian/Cyrillic (models)	41A5277	1
Serbian/Cyrillic (models)	41A5278	1
Slovak (models)	41A5279	1
Spanish (models)	41A5280	1
Swedish/Finn (models)	41A5281	1
Swiss, F/G (models)	41A5282	1
Thailand (models)	41A5283	1
Turkish 179 (models)	41A5284	1
Turkish 440 (models)	41A5285	1
UK (models)	41A5286	1
US European (models)	41A5287	1
Slovenian (models)	41A5288	1

6394 mice	FRU#	CRU
Optical wheel mouse (400DPI, USB) (models)	41U3013	1
Optical wheel mouse (400DPI, USB) (models)	41U3030	1
Scroll point optical mouse (800DPI, USB) (models)	41U3019	1

6394 Adapters and miscellaneous FRUs	FRU#	CRU
Modem daughter card (MDC 1.5) kit (models)	39T0495	2
Modem daughter card (MDC 1.5) kit internal cable /RJ11 (models)	41R8522	2
Lenovo branded speakers - 2 piece--primary (models)	41A5331	1
Lenovo branded speakers - 2 piece--secondary (models)	41A5334	1
Speaker power brick (models)	89P8571	1
Thermal grease syringe (models)	91P8835	N
Vertical PC stand (VPC) for blue 4.5L chassis (models)	41R4770	2

6394 Power Cords	FRU#	CRU
Power cord - US/Canada (models)	42T5004	1
Power cord - Japan (models)	42T5011	1
Power cord - Argentina (models)	42T5017	1
Power cord - Brazil (models)	42T5174	1
Power cord - Europe (Germany) (models)	42T5029	1
Power cord - UK (models)	42T5035	1
Power cord - Denmark (models)	42T5041	1
Power cord - Switzerland (models)	42T5044	1

6394 Power Cords	FRU#	CRU
Power cord - Italy (models)	42T5047	1
Power cord - Australia / New Zealand (models)	42T5050	1
Power cord - South Africa (models)	42T5056	1
Power cord - Israel (models)	42T5062	1
Power cord - China (PRC) (models)	42T5065	1
Power cord - Taiwan (models)	42T5071	1
Power cord - Korea (models)	42T5077	1
Power cord - India (models)	42T5083	1
Power cord - Thailand (models)	42T4406	1
Power cord - US/Canada--optional second source (models)	42T5089	1
Power cord - Japan-optional second source (models)	42T5096	1
Power cord - Argentina - optional second source (models)	42T5102	1
Power cord - Brazil (new type) - optional second source (models)	42T5177	1
Power cord - Europe (Germany) - optional second source (models)	42T5114	1
Power cord - UK - optional second source (models)	42T5120	1
Power cord - Denmark - optional second source (models)	42T5126	1
Power cord - Switzerland - optional second source (models)	42T5129	1
Power cord - Italy - optional second source (models)	42T5132	1
Power cord - Australia/New Zealand - optional second source (models)	42T5135	1
Power cord - South Africa - optional second source (models)	42T5141	1
Power cord - Israel - optional second source (models)	42T5147	1
Power cord - China (PRC) - optional second source (models)	42T5150	1
Power cord - Taiwan-optional second source (models)	42T5156	1
Power cord - Korea-optional second source (models)	42T5162	1
Power cord - India-optional second source (models)	42T5168	1
Power cord - Thailand-optional second source (models)	42T4400	1

6394 Windows XP Home Recovery CDs	FRU#	CRU
US/UK/AP/TH (models)	45R6005	1
FR/CF (models)	45R6006	1
GR (models)	45R6007	1
IT (models)	45R6010	1
BR (models)	45R6009	1
SP/LA (models)	45R6008	1
DK (models)	45R6014	1
NL (models)	45R6015	1
AE (models)	45R6020	1
SV (models)	45R6013	1
HE (models)	45R6018	1

6394 Windows XP Home Recovery CDs	FRU#	CRU
FI (models)	45R6017	1
NO (models)	45R6012	1
PL (models)	45R6019	1
PO (models)	45R6030	1
RU (models)	45R6021	1
RE (models)	45R6029	1
HU (models)	45R6023	1
CZ (models)	45R6016	1
TR (models)	45R6022	1
GK (models)	45R6024	1
Japanese (models)	45R6011	1
Simplified Chinese (models)	45R6025	1
Taiwan-TC (models)	45R6026	1
Hong Kong-TC (models)	45R6027	1
Korea (models)	45R6028	1

6394 Windows XP Pro Recovery CDs	FRU#	CRU
US/UK/AP/TH (models)	45R5979	1
FR/CF (models)	45R5980	1
GR (models)	45R5981	1
IT (models)	45R5984	1
BR (models)	45R5983	1
SP/LA (models)	45R5982	1
DK (models)	45R5988	1
NL (models)	45R5989	1
AE (models)	45R5994	1
SV (Swedish) (models)	45R5987	1
HE (models)	45R5992	1
FI (models)	45R5991	1
NO (models)	45R5986	1
PL (models)	45R5993	1
PO (models)	45R6004	1
RU (models)	45R5995	1
RE (models)	45R6003	1
HU (models)	45R5997	1
CZ (models)	45R5990	1
TR (models)	45R5996	1
GK (models)	45R5998	1
Japanese (models)	45R5985	1

6394 Windows XP Pro Recovery CDs	FRU#	CRU
Simplified Chinese (models)	45R5999	1
Taiwan-TC (models)	45R6000	1
Hong Kong-TC (models)	45R6001	1
Korea (models)	45R6002	1
Multilingual 1 XP-P -- EN, NL, FR, GR, IT (models)	45R5977	1
Multilingual 2 XP-P -- EN, DK, FI, NO, SV (models)	45R5978	1

6394 Vista Home Basic 32 Recovery DVDs	FRU#	CRU
English (models 13H)	46R7098	1
Russian English (models)	46R7099	1
French (models)	46R7100	1
German (models)	46R7101	1
Spanish (models)	46R7102	1
Brazilian (models)	46R7103	1
Italian (models)	46R7104	1
Japanese (models)	46R7105	1
Norwegian (models)	46R7106	1
Swedish (models)	46R1086	1
Danish (models)	46R7107	1
Dutch (models)	46R1088	1
Czech (models)	46R1089	1
Finnish (models)	46R1090	1
Polish (models)	46R1091	1
Russian (models)	46R7108	1
Turkish (models)	46R1093	1
Hungarian (models)	46R1094	1
Greek (models)	46R1095	1
Simplified Chinese (models)	46R7109	1
Taiwan (models)	46R7110	1
Hong Kong (models)	46R7111	1
Korea (models)	46R1099	1
Slovenian (models)	46R1100	1
Hebrew (models)	46R1101	1
Portuguese (models)	46R1102	1
Arabic Localized (models)	46R1103	1
Slovakia (models)	46R1104	1

6394 Vista Business 32 Recovery DVDs	FRU#	CRU
English (models 15Q)	46R7070	1
Russian (models)	46R7071	1
French (models)	46R7072	1
German (models)	46R7073	1
Spanish (models 15S 15D 15Y 17S 17Y 18S 18Y)	46R7074	1
Brazilian (models)	46R7075	1
Italian (models)	46R7076	1
Japanese (models)	46R7077	1
Norwegian (models)	46R7078	1
Swedish (models)	46R1028	1
Danish (models)	46R7079	1
Dutch (models)	46R1030	1
Czech (models)	46R1031	1
Finnish (models)	46R1032	1
Polish (models)	46R1033	1
Russian (models)	46R7080	1
Turkish (models)	46R1035	1
Hungarian (models)	46R1036	1
Greek (models)	46R1037	1
Simplified Chinese (models 15C)	46R7081	1
Traditional Chinese (models)	46R7082	1
Traditional Chinese (models)	46R7083	1
Korean (models)	46R1041	1
Slovenian (models)	46R1042	1
Romanian (models)	46R1043	1
Portuguese (models)	46R1044	1
Serbian - Latin (models)	46R1045	1
Slovakian (models)	46R1046	1
Arabic Localized (models)	46R1047	1
Hebrew (models)	46R1048	1

6394 Vista Ultimate 32 Recovery DVDs	FRU#	CRU
English (models)	46R7112	1
Russian (models)	46R7113	1
French (models)	46R7114	1
German (models)	46R7115	1
Spanish (models)	46R7116	1
Brazilian (models)	46R7117	1
Italian (models)	46R7118	1

6394 Vista Ultimate 32 Recovery DVDs	FRU#	CRU
Japanese (models)	46R7119	1
Norwegian (models)	46R7120	1
Swedish (models)	46R1114	1
Danish (models)	46R7121	1
Dutch (models)	46R1116	1
Czech (models)	46R1117	1
Finnish (models)	46R1118	1
Polish (models)	46R1119	1
Russian (models)	46R7122	1
Turkish (models)	46R1121	1
Hungarian (models)	46R1122	1
Greek (models)	46R1123	1
Simplified Chinese (models)	46R7123	1
Traditional Chinese (models)	46R7124	1
Traditional Chinese (models)	46R7125	1
Korean (models)	46R1127	1
Slovenian (models)	46R1128	1
Hebrew (models)	46R1129	1
Portuguese (models)	46R1130	1
Slovakian (models)	46R1131	1
Arabic Localized (models)	46R1132	1

6394 Vista Business 64 Recovery DVDs	FRU#	CRU
English (models)	46R7084	1
Russian English (models)	46R7085	1
French (models)	46R7086	1
German (models)	46R7087	1
Spanish (models)	46R7088	1
Brazilian (models)	46R7089	1
Italian (models)	46R7090	1
Japanese (models)	46R7091	1
Norwegian (models)	46R7092	1
Swedish (models)	46R1058	1
Danish (models)	46R7093	1
Dutch (models)	46R1060	1
Czech (models)	46R1061	1
Finnish (models)	46R1062	1
Polish (models)	46R1063	1
Russian (models)	46R7094	1

6394 Vista Business 64 Recovery DVDs	FRU#	CRU
Turkish (models)	46R1065	1
Hungarian (models)	46R1066	1
Greek (models)	46R1067	1
Simplified Chinese (models)	46R7095	1
Taiwan (models)	46R7096	1
Hong Kong (models)	46R7097	1
Korea (models)	46R1071	1
Slovenian (models)	46R1072	1
Arabic Localized (models)	46R1073	1
Hebrew (models)	46R1074	1
Portuguese (models)	46R1075	1
Slovakian (models)	46R1076	1

Machine Type 6395

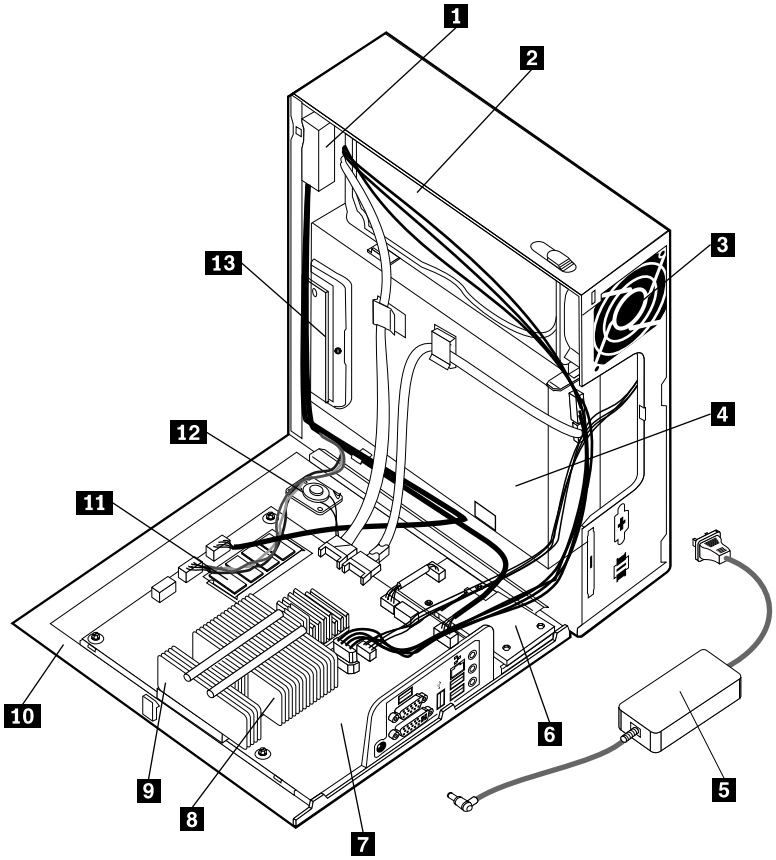

Item #	6395 FRUs	FRU#	CRU
1	Front audio/USB card and cable (included in Cables kit) (all models)	41R8510	N
2	Hard disk drive, 80 GB 7200rpm SATA (models 11S 11D 11Y 11A 11T 12S 12D 12Y 12G 13S 13G 13C 13B 13H 16S 16G)	40Y9034	2

Item #	6395 FRUs	FRU#	CRU
2	Hard disk drive, 160 GB 7200rpm SATA (models 14S 14D 14Y 14M 14A 14T 14K 14J 15M 15A 15Q 17U 17F 17S 17D 17Y 17G 17M 17A 17T 17K 17J 18S 18D 18Y 18A 18Q 18T 18C 18B 18H 19S 19A 19Q 19T 19K 19J 21S 21D 21Y 21A 21Q 21T 21B 21H 21V 21K 21J 23U 23F 23S 23L 23D 23Y 23G 23M 23A 23Q 23T 23C 23B 23H 23V 23K 23R 23E 23J 24U 24F 24G 24M 24A 24T 24K 24J 25S 25D 25Y 27U 27F 28U 28F 29U 29F 29S 29L 29D 29Y 29G 29M 29A 29Q 29T 29C 29B 29H 29V 29K 29R 29E 29J 31U 31F 33S 33K 33J 33A 33Q 33T 34S 34D 34Y 34A 34Q 34T 34B 34H 34V 34K 34J 36U 36F 36S 36L 36D 36Y 36G 36M 36A 36Q 36T 36C 36B 36H 36V 36K 36R 36E 36J 38A 38Q 38T 38K 39M 39A 39Q 39T 39K 39J 41M 41A 41Q 41T 41K 41J 42M 42A 42J 43M 43A 43Q 43T 43K 43J 44A 44Q 44T 24Q 45M 45A 45Q 45T 45K 45J 46M 46A 46Q 46T 46K 46J 33M 34M 61U 61F 61S 62U 63M 63A 63Q 63T 63K 63J 65A 65Q 65T 65K 66G 67S 67Y 67M 67A 67T 67K 67J 68S 68Y 68G 68M 68A 68T 68K 68J 69S 69Y 81S 81Y 81M 81A 81Q 81T 81K 81J 82U 82F 82M 82A 82Q 82T 82K 82J 83U 83F 84U 84F 84M 84A 84Q 84T 84K 84J 86U 86F 87U 87F 88U 88F 89U 89F 54U 54F 57U 57F)	40Y9035	2
2	Hard disk drive, 250 GB 7200rpm SATA (models 22B 22H 22V 32S 32D 32Y 35B 35H 35V 64M 64A 64Q 64T 64K 64J 83U 83F 85U 85F 55U 55F 56U 56F)	40Y9036	2
2	Hard disk drive, 320 GB 7200rpm SATA (models 26U 26F 26M 26A 26Q 26T 26K 26J 47M 47A 47Q 47T 47K 47J 49M 49A 49Q 49T 49K 49J 51M 51A 51Q 51T 51K 51J)	87H4891	2
2	Hard disk drive, 500 GB 7200rpm SATA (models 52M 52A 52Q 52T 52K 52J)	41X5582	2
2	Hard disk drive, 750 GB 7200rpm SATA (models)	43C3671	2
2	Hard disk drive, 1TB 7200rpm SATA (models CTO)	45C5973	2
3	System fan (all models)	41R8511	2
4	DVD-ROM Drive - 16x/48x - SATA (models 11S 11D 11Y 11A 11T 12S 12D 12Y 12G 13S 13G 13C 13B 13H 14S 14D 14Y 14M 14A 14T 14K 16S 16G 17U 17F 17S 17D 17Y 17G 17M 17A 17T 17K 17J 19S 19A 19Q 19T 19K 19J 27U 27F 28U 28F 33S 33K 33J 33A 33Q 33T 38A 38Q 38T 38K 39M 39A 39Q 39T 39K 39J 44A 44Q 44T 33M 61U 61F 61S 62U 65A 65Q 65T 65K 67S 67Y 67M 67A 67T 67K 67J 69S 69Y 82U 82F 82M 82A 82Q 82T 82K 82J 84U 84F 84M 84A 84Q 84T 84K 84J 86U 86F 88U 88F 54U 54F 57U 57F)	41N3325	2
4	DVD-ROM Drive - DVD-RW/CD-RW Rambo 8 (SATA) Matrix (models 15M 15A 15Q 15T 18S 18D 18Y 18A 18Q 18T 18C 18B 18H 21S 21D 21Y 21A 21Q 21T 21B 21H 21V 21K 21J 22B 22H 22V 23U 23F 23S 23L 23D 23Y 23G 23M 23A 23Q 23T 23C 23B 23H 23V 23K 23R 23E 23J 24U 24F 24G 24M 24A 24T 24K 24J 25S 25D 25Y 26U 26F 26M 26A 26Q 26T 26K 26J 29U 29F 29S 29L 29D 29Y 29G 29M 29A 29Q 29T 29C 29B 29H 29V 29K 29R 29E 29J 31U 31F 32S 32D 32Y 34S 34D 34Y 34A 34Q 34T 34B 34H 34V 34K 34J 35B 35H 35V 36U 36F 36S 36L 36D 36Y 36G 36M 36A 36Q 36T 36C 36B 36H 36V 36K 36R 36E 36J 41M 41A 41Q 41T 41K 41J 42M 42A 42J 43M 43A 43Q 43T 43K 43J 24Q 45M 45A 45Q 45T 45K 45J 46M 46A 46Q 46T 46K 46J 47M 47A 47Q 47T 47K 47J 49M 49A 49Q 49T 49K 49J 51M 51A 51Q 51T 51K 51J 52M 52A 52Q 52T 52K 52J 34M 63M 63A 63Q 63T 63K 63J 64M 64A 64Q 64T 64K 64J 66G 68S 68Y 68G 68M 68A 68T 68K 68J 81S 81Y 81M 81A 81Q 81T 81K 81J 83U 83F 85U 85F 87U 87F 89U 89F 55U 55F 56U 56F)	43C1042	2
4	DVD-ROM Drive - DVD-ROM/CD-RW Combo Drive - 48x/32x/48x/16x - SATA Matrix (models)	42Y9353	2

Item #	6395 FRUs	FRU#	CRU
5	Power Adapter, 120W AC/DC (models 11S 11D 11Y 11A 11T 12S 12D 12Y 12G 13S 13G 13C 13B 13H 14S 14D 14Y 14M 14A 14T 14K 14J 15M 15A 15Q 15T 16S 16G 17U 17F 17S 17D 17Y 17G 17M 17A 17T 17K 17J 18S 18D 18Y 18A 18Q 18T 18C 18B 18H 19S 19A 19Q 19T 19K 19J 21S 21D 21Y 21A 21Q 21T 21B 21H 21V 21K 21J 22B 22H 22V 23U 23F 23S 23L 23D 23Y 23G 23M 23A 23Q 23T 23C 23B 23H 23V 23K 23R 23E 23J 24U 24F 24G 24M 24A 24T 24K 24J 25S 25D 25Y 26U 26F 26M 26A 26Q 26T 26K 26J 27U 27F 28U 28F 29U 29F 29S 29L 29D 29Y 29G 29M 29A 29Q 29T 29C 29B 29H 29V 29K 29R 29E 29J 31U 31F 32S 32D 32Y 33S 33K 33J 33A 33Q 33T 34S 34D 34Y 34A 34Q 34T 34B 34H 34V 34K 34J 35B 35H 35V 36U 36F 36S 36L 36D 36Y 36G 36M 36A 36Q 36T 36C 36B 36H 36V 36K 36R 36E 36J 38A 38Q 38T 38K 39M 39A 39Q 39T 39K 39J 41M 41A 41Q 41T 41K 41J 42M 42A 42J 43M 43A 43Q 43T 43K 43J 44A 44Q 44T 24Q 45M 45A 45Q 45T 45K 45J 46M 46A 46Q 46T 46K 46J 47M 47A 47Q 47T 47K 47J 49M 49A 49Q 49T 49K 49J 51M 51A 51Q 51T 51K 51J 52M 52A 52Q 52T 52K 52J 33M 34M 61U 61F 61S 62U 63M 63A 63Q 63T 63K 63J 64M 64A 64Q 64T 64K 64J 65A 65Q 65T 65K 66G 67S 67Y 67M 67A 67T 67K 67J 68S 68Y 68G 68M 68A 68T 68K 68J 69S 69Y 81S 81Y 81M 81A 81Q 81T 81K 81J 82U 82F 82M 82A 82Q 82T 82K 82J 83U 83F 84U 84F 84M 84A 84Q 84T 84K 84J 85U 85F 86U 86F 87U 87F 88U 88F 89U 89F 54U 54F 55U 55F 56U 56F 57U 57F)	41A9732	1
5	Power Adapter, 120W power adapter (models 11S 11D 11Y 11A 11T 12S 12D 12Y 12G 13S 13G 13C 13B 13H 14S 14D 14Y 14M 14A 14T 14K 14J 15M 15A 15Q 15T 16S 16G 17U 17F 17S 17D 17Y 17G 17M 17A 17T 17K 17J 18S 18D 18Y 18A 18Q 18T 18C 18B 18H 19S 19A 19Q 19T 19K 19J 21S 21D 21Y 21A 21Q 21T 21B 21H 21V 21K 21J 22B 22H 22V 23U 23F 23S 23L 23D 23Y 23G 23M 23A 23Q 23T 23C 23B 23H 23V 23K 23R 23E 23J 24U 24F 24G 24M 24A 24T 24K 24J 25S 25D 25Y 26U 26F 26M 26A 26Q 26T 26K 26J 27U 27F 28U 28F 29U 29F 29S 29L 29D 29Y 29G 29M 29A 29Q 29T 29C 29B 29H 29V 29K 29R 29E 29J 31U 31F 32S 32D 32Y 33S 33K 33J 33A 33Q 33T 34S 34D 34Y 34A 34Q 34T 34B 34H 34V 34K 34J 35B 35H 35V 36U 36F 36S 36L 36D 36Y 36G 36M 36A 36Q 36T 36C 36B 36H 36V 36K 36R 36E 36J 38A 38Q 38T 38K 39M 39A 39Q 39T 39K 39J 41M 41A 41Q 41T 41K 41J 42M 42A 42J 43M 43A 43Q 43T 43K 43J 44A 44Q 44T 24Q 45M 45A 45Q 45T 45K 45J 46M 46A 46Q 46T 46K 46J 47M 47A 47Q 47T 47K 47J 49M 49A 49Q 49T 49K 49J 51M 51A 51Q 51T 51K 51J 52M 52A 52Q 52T 52K 52J 33M 34M 61U 61F 61S 62U 63M 63A 63Q 63T 63K 63J 64M 64A 64Q 64T 64K 64J 65A 65Q 65T 65K 66G 67S 67Y 67M 67A 67T 67K 67J 68S 68Y 68G 68M 68A 68T 68K 68J 69S 69Y 81S 81Y 81M 81A 81Q 81T 81K 81J 82U 82F 82M 82A 82Q 82T 82K 82J 83U 83F 84U 84F 84M 84A 84Q 84T 84K 84J 85U 85F 86U 86F 87U 87F 88U 88F 89U 89F 54U 54F 55U 55F 56U 56F 57U 57F)	41A9747	1
6	Express Card Assembly (all models)	41R8570	N
7	System board, Mini-ITX Intel (Q35, ICH9DO) (models 25S 25D 25Y 26U 26F 26M 26A 26Q 26T 26K 26J 27U 27F 28U 28F 29U 29F 29S 29L 29D 29Y 29G 29M 29A 29Q 29T 29C 29B 29H 29V 29K 29R 29E 29J 31U 31F 32S 32D 32Y 33S 33K 33J 33A 33Q 33T 34S 34D 34Y 34A 34Q 34T 34B 34H 34V 34K 34J 35B 35H 35V 36U 36F 36S 36L 36D 36Y 36G 36M 36A 36Q 36T 36C 36B 36H 36V 36K 36R 36E 36J 37U 37F 37G 51M 51A 51Q 51T 51K 51J 52M 52A 52Q 52T 52K 52J 33M 34M 54U 54F 55U 55F 56U 56F 57U 57F)	46R3849	N

Item #	6395 FRUs	FRU#	CRU
7	System board, non-AMT Mini-ITX Intel (Q35, ICH9DO) (models 11S 11D 11Y 11A 11T 12S 12D 12Y 12G 13S 13G 13C 13B 13H 14S 14D 14Y 14M 14A 14T 14K 14J 15M 15A 15Q 15T 16S 16G 17U 17F 17S 17D 17Y 17G 17M 17A 17T 17K 17J 18S 18D 18Y 18A 18Q 18T 18C 18B 18H 19S 19A 19Q 19T 19K 19J 21S 21D 21Y 21A 21Q 21T 21B 21H 21V 21K 21J 22B 22H 22V 23U 23F 23S 23L 23D 23Y 23G 23M 23A 23Q 23T 23C 23B 23H 23V 23K 23R 23E 23J 24U 24F 24G 24M 24A 24T 24K 24J 38A 38Q 38T 38K 39M 39A 39Q 39T 39K 39J 41M 41A 41Q 41T 41K 41J 42M 42A 42J 43M 43A 43Q 43T 43K 43J 44A 44Q 44T 24Q 45M 45A 45Q 45T 45K 45J 46M 46A 46Q 46T 46K 46J 47M 47A 47Q 47T 47K 47J 49M 49A 49Q 49T 49K 49J 61U 61F 61S 62U 63M 63A 63Q 63T 63K 63J 64M 64A 64Q 64T 64K 64J 65A 65Q 65T 65K 66G 67S 67Y 67M 67A 67T 67K 67J 68S 68Y 68G 68M 68A 68T 68K 68J 69S 69Y 81S 81Y 81M 81A 81Q 81T 81K 81J 82U 82F 82M 82A 82Q 82T 82K 82J 83U 83F 84U 84F 84M 84A 84Q 84T 84K 84J 85U 85F 86U 86F 87U 87F 88U 88F 89U 89F)	46R3848	N
8	Microprocessor, Intel Conroe E6750 (Core2 Duo) 2.66GHz, G-0 Stepping, 65nm, 1333MHZ FSB, 4MB L2 (models)	45C6898	N
8	Microprocessor, Intel Conroe E6550 (Core2 Duo) 2.33GHz, G-0 Stepping, 65nm, 1333MHz FSB, 4MB L2 (models)	45C6899	N
8	Microprocessor, Intel Conroe E4500 (Core2 Duo) 2.20GHz, M-0 Stepping, 65nm, 800MHz FSB, 2MB L2 (models 16S 16G 17U 17F 17S 17D 17Y 17G 17M 17A 17T 17K 17J 18S 18D 18Y 18A 18Q 18T 18C 18B 18H 43M 43A 43Q 43T 43K 43J 44A 44Q 44T)	45C6900	N
8	Microprocessor, Intel Conroe E2160 (Pentium D) 1.8GHz, M-0 Stepping, 65nm, 800MHz FSB, 1MB L2 (models 38A 38Q 38T 38K 39M 39A 39Q 39T 39K 39J 41M 41A 41Q 41T 41K 41J 42M 42A)	45C6901	N
8	Microprocessor, Intel Conroe-L 440 (Celeron) 2.0GHz, A-1 Stepping, 65nm, 800MHz FSB, 512KB L2 (models)	45C6902	N
8	Microprocessor, Intel Wolfdale E8400 (Core2 Duo) 3.0GHz, C-0 Stepping, 45nm, 1333MHz FSB, 6MB L2 (models 25S 25D 25Y 26U 26F 26M 26A 26Q 26T 26K 26J 27U 27F 28U 28F 29U 29F 29S 29L 29D 29Y 29G 29M 29A 29Q 29T 29C 29B 29H 29V 29K 29R 29E 29J 31U 31F 32S 32D 32Y 49M 49A 49Q 49T 49K 49J 51M 51A 51Q 51T 51K 51J 52M 52A 52Q 52T 52K 52J 86U 86F 87U 87F 54U 54F 55U 55F)	45C8499	N
8	Microprocessor, Intel Wolfdale E8200 (Core2 Duo) 2.66GHz, C-0 Stepping, 45nm, 1333MHz FSB, 6MB L2 (models 19S 19A 19Q 19T 19K 19J 21S 21D 21Y 21A 21Q 21T 21B 21H 21V 21K 21J 22B 22H 22V 23U 23F 23S 23L 23D 23Y 23G 23M 23A 23Q 23T 23C 23B 23H 23V 23K 23R 23E 23J 24U 24F 24G 24M 24A 24T 24K 24J 33S 33K 33J 33A 33Q 33T 34S 34D 34Y 34A 34Q 34T 34B 34H 34V 34K 34J 35B 35H 35V 36U 36F 36S 36L 36D 36Y 36G 36M 36A 36Q 36T 36C 36B 36H 36V 36K 36R 36E 36J 24Q 45M 45A 45Q 45T 45K 45J 46M 46A 46Q 46T 46K 46J 47M 47A 47Q 47T 47K 47J 33M 34M 88U 88F 89U 89F 56U 56F 57U 57F)	45C8531	N
8	Microprocessor, E7200, 2.53GHz, 1066MHz FSB, 3MB L2 (models 19S 19A 19Q 19T 19K 19J 21S 21D 21Y 21A 21Q 21T 21B 21H 21V 21K 21J 22B 22H 22V 23U 23F 23S 23L 23D 23Y 23G 23M 23A 23Q 23T 23C 23B 23H 23V 23K 23R 23E 23J 24U 24F 24G 24M 24A 24T 24K 24J 33S 33K 33J 33A 33Q 33T 34S 34D 34Y 34A 34Q 34T 34B 34H 34V 34K 34J 35B 35H 35V 36U 36F 36S 36L 36D 36Y 36G 36M 36A 36Q 36T 36C 36B 36H 36V 36K 36R 36E 36J 24Q 45M 45A 45Q 45T 45K 45J 46M 46A 46Q 46T 46K 46J 47M 47A 47Q 47T 47K 47J 33M 34M 88U 88F 89U 89F 56U 56F 57U 57F)	46R4261	N
8	Microprocessor, E2200, 2.20GHz, 800MHz FSB, 1MB L2 (models 63M 63A 63Q 63T 63K 63J 65A 65Q 65T 65K 67S 67Y 67M 67A 67T 67K 67J 68S 68Y 68G 68M 68A 68T 68K 68J 84U 84F 84M 84A 84Q 84T 84K 84J 85U 85F)	46R4260	N
9	Heat sink Intel (all models)	41R8545	2
11	Memory module, 512MB DDR2 PC2-5300 (667MHz) SoDIMM (models 1S 11D 11Y 11A 11T 12S)	43C3814	2

Item #	6395 FRUs	FRU#	CRU
11	Memory module, 1GB DDR2 PC2-5300 (667MHz) SoDIMM (models 12S 12D 12Y 12G 13S 13G 13C 13B 13H 14S 14D 14Y 14M 14A 14T 14K 14J 15M 15A 15Q 15T 16S 16G 17U 17F 17S 17D 17Y 17G 17M 17A 17T 17K 17J 18S 18D 18Y 18A 18Q 18T 18C 18B 18H 19S 19A 19Q 19T 19K 19J 21S 21D 21Y 21A 21Q 21T 21B 21H 21V 21K 21J 22B 22H 22V 33S 33K 33J 33A 33Q 33T 34S 34D 34Y 34A 34Q 34T 34B 34H 34V 34K 34J 35B 35H 35V 38A 38Q 38T 38K 39M 39A 39Q 39T 39K 39J 41M 41A 41Q 41T 41K 41J 42M 42A 42J 43M 43A 43Q 43T 43K 43J 44A 44Q 44T 46M 46A 46Q 46T 46K 46J 33M 34M 61U 61F 61S)	43C3815	2
11	Memory module, 2GB DDR2 PC2-5300 (667MHz) SoDIMM (models 27U 27F 28U 28F 29U 29F 29S 29L 29D 29Y 29G 29M 29A 29Q 29T 29C 29B 29H 29V 29K 29R 29E 29J 31U 31F 32S 32D 32Y 36U 36F 36S 36L 36D 36Y 36G 36M 36A 36Q 36T 36C 36B 36H 36V 36K 36R 36E 36J 47M 47A 47Q 47T 47K 47J 49M 49A 49Q 49T 49K 49J 24Q 45M 45A 45Q 45T 45K 45J 51M 51A 51Q 51T 51K 51J 52M 52A 52Q 52T 52K 52J)	43C6489	2
12	Internal speaker (all models)	41R8517	2
13	Media card reader (all models)	41R8568	N

The FRUs listed in the following tables are not illustrated.

6395 FRUs	FRU#	CRU
Hard Disk Drive tray (all models)	41R8518	2
Shield Kit (all models)	41R8543	N
Cable, C2 Swtich/Housing assembly (all models)	41R8544	N
Cable, Serial (all models)	41R8548	N
USB Cable (all models)	41R8560	N
Kit, Shell (all models)	41R8563	N
PWR/LED Cable Asm (all models)	41R8555	N

6395 Keyboards (USB Preferred Pro)	FRU#	CRU
US English (models 11A 12G 13G 13H 14M 14A 15M 15A 15Q 16G 17U 17G 17M 17A 18A 18Q 18H 19A 19Q 21A 21Q 21H 22H 23U 23L 23G 23M 23A 23Q 23H 24U 24G 24M 24A 26U 26M 26A 26Q 27U 28U 29L 29G 29M 29A 29Q 29H 29R 29E 31U 36U 37U 36L 36G 33A 33Q 34A 34Q 36M 36A 36Q 34H 35H 36H 36E 36R 38A 38Q 39M 39A 39Q 41M 41A 41Q 42M 42A 43M 43A 43Q 44A 44Q 24Q 45M 45A 45Q 46M 46Q 46A 47M 47Q 47A 49M 49A 49Q 51M 51A 51Q 52M 52A 52Q 33M 34M 61U 62U 63M 63A 63Q 64M 64A 64Q 65A 65Q 66G 67M 67A 68G 68M 68A 81M 81A 81Q 83U 84U 84M 84A 84Q 85U 86U 87U 88U 89U 54U 55U 56U 57U)	41A5289	1
Arabic(models)	41A5290	1
Arabic/French (models 12G 13G 16G 17G 23G 24G 29G 36G 37G 66G 68G)	41A5291	1
Belgian/French (models 12G 13G 16G 17G 23G 24G 29G 36G 37G 66G 68G)	41A5292	1
Belgian/UK (models 12G 13G 16G 17G 23G 24G 29G 36G 37G 66G 68G)	41A5293	1
Brazilian (models)	41A5294	1
Bulgarian (models 12G 13G 16G 17G 23G 24G 29G 36G 37G 66G 68G)	41A5295	1
Hong Kong/Taiwan (models 34B 35B 36B 34V 35V 36V)	41A5296	1
Czech (models 12G 13G 16G 17G 23G 24G 29G 36G 37G 66G 68G)	41A5297	1
Danish (models 12G 13G 16G 17G 23G 24G 29G 36G 37G 66G 68G)	41A5298	1

6395 Keyboards (USB Preferred Pro)	FRU#	CRU
Dutch (models 12G 13G 16G 17G 23G 24G 29G 36G 37G 66G 68G)	41A5299	1
French (models 12G 13G 16G 17G 23G 24G 29G 36G 37G 66G 68G)	41A5300	1
French Canadian 445 (models 17F 23F 24F 26F 27F 28F 31F 36F 37F 61F 83F 84F 85F 86F 87F 88U 89F 54F 55F 56F 57F)	41A5301	1
French Canadian 58 (models 17F 23F 24F 26F 27F 28F 31F 36F 37F 61F 83F 84F 85F 86F 87F 88U 89F 54F 55F 56F 57F)	41A5302	1
German (models 12G 13G 16G 17G 23G 24G 29G 36G 37G 66G 68G)	41A5303	1
Greek (models 12G 13G 16G 17G 23G 24G 29G 36G 37G 66G 68G)	41A5304	1
Greek/US (models 12G 13G 16G 17G 23G 24G 29G 66G 68G)	41A5305	1
Hebrew (models 12G 13G 16G 17G 23G 24G 29G 36G 37G 66G 68G)	41A5306	1
Hungarian (models 12G 13G 16G 17G 23G 24G 29G 36G 37G 66G 68G)	41A5307	1
Iceland (models 112G 13G 16G 17G 23G 24G 29G 36G 37G 66G 68G)	41A5308	1
Italian (models 12G 13G 16G 17G 23G 24G 29G 36G 37G 66G 68G)	41A5309	1
Japanese (models 14J 17J 19J 21J 23J 24J 26J 29J 33J 34J 36J 39J 41J 42J 43J 45J 46J 47J 49J 51J 52J 63J 64J 67J 68J 81J 84J)	41A5310	1
Korean (models 11K14K 17K 19K 21K 23K 24K 26K 29K 33K 34K 36K 38K 39K 41K 43K 45K 46K 47K 49K 51K 52K 63K 64K 65K 67K 68K 81K 84K)	41A5311	1
LA Spanish (models 11S 11D 11Y 12S 12D 12Y 13S 14S 14D 14Y 16S 17S 17D 17Y 18S 18D 18Y 19S 21S 21D 21Y 23S 23D 23Y 25S 25D 25Y 29S 29D 29Y 32S 32D 32Y 33S 34S 36S 34D 36D 34Y 36Y 67S 67Y 68S 68Y 69S 69Y 81S 81Y)	41A5312	1
Norwegian (models 12G 13G 16G 17G 23G 24G 29G 36G 37G 66G 68G)	41A5313	1
Polish (models 12G 13G 16G 17G 23G 24G 29G 36G 37G 66G 68G)	41A5314	1
Portuguese (models 12G 13G 16G 17G 23G 24G 29G 36G 37G 66G 68G)	41A5315	1
Romanian 446 (models 12G 13G 16G 17G 23G 24G 29G 36G 37G 66G 68G)	41A5316	1
Romanian 096 (models 12G 13G 16G 17G 23G 24G 29G 36G 37G 66G 68G)	41A5317	1
Russian/Cyrillic(models 12G 13G 16G 17G 23G 24G 29G 36G 37G 66G 68G)	41A5318	1
Serbian/Cyrillic (models 12G 13G 16G 17G 23G 24G 29G 36G 37G 66G 68G)	41A5319	1
Slovak (models 12G 13G 16G 17G 23G 24G 29G 36G 37G 66G 68G)	41A5320	1
Spanish (models 12G 13G 16G 17G 23G 24G 29G 36G 37G 66G 68G)	41A5321	1
Swedish/Finn (models 12G 13G 16G 17G 23G 24G 29G 36G 37G 66G 68G)	41A5322	1
Swiss (models 12G 13G 16G 17G 23G 24G 29G 36G 37G 66G 68G)	41A5323	1
Thailand (models 11T 14T 15T 18T 19T 21T 33T 34T 36T 38T 39T 41T 43T 44T 45T 46T 47T 49T 51T 52T 63T 64T 65T 67T 68T 81T 84T)	41A5324	1
Turkish 440 (models 12G 13G 16G 17G 23G 24G 29G 36G 37G 66G 68G)	41A5325	1
Turkish 179 (models 12G 13G 16G 17G 23G 24G 29G 36G 37G 66G 68G)	41A5326	1
UK English (models 12G 13G 16G 17G 23G 24G 29G 36G 37G 66G 68G)	41A5327	1
US Euro (models 12G 13G 16G 17G 23G 24G 29G 36G 37G 66G 68G)	41A5328	1
Slovenian (models 12G 13G 16G 17G 23G 24G 29G 36G 37G 66G 68G)	41A5329	1

6395 Keyboard (USB Preferred Pro Fingerprint Keyboard)	FRU#	CRU
US (models)	41A5248	1
Arabic (models)	41A5249	1

6395 Keyboard (USB Preferred Pro Fingerprint Keyboard)	FRU#	CRU
Arabic/French (models)	41A5250	1
Belgian/French (models)	41A5251	1
Belgian/UK (models)	41A5252	1
Brazil/Portuguese (models)	41A5253	1
Bulgarian (models)	41A5254	1
Chinese/US (models)	41A5255	1
Czech (models)	41A5256	1
Danish (models)	41A5257	1
Dutch (models)	41A5258	1
French (models)	41A5259	1
French Canadian 445 (models)	41A5260	1
French Canadian 58 (models)	41A5261	1
German (models)	41A5262	1
Greek (models)	41A5263	1
Greek/US (models)	41A5264	1
Hebrew (models)	41A5265	1
Hungarian (models)	41A5266	1
Iceland (models)	41A5267	1
Italian (models)	41A5268	1
Japanese (models)	41A5269	1
Korean (models)	41A5270	1
LA Spanish (models)	41A5271	1
Norwegian (models)	41A5272	1
Polish (models)	41A5273	1
Portuguese (models)	41A5274	1
Romanian 446 (models)	41A5276	1
Romanian 96 (models)	41A5275	1
Russian/Cyrillic (models)	41A5277	1
Serbian/Cyrillic (models)	41A5278	1
Slovak (models)	41A5279	1
Spanish (models)	41A5280	1
Swedish/Finn (models)	41A5281	1
Swiss, F/G (models)	41A5282	1
Thailand (models)	41A5283	1
Turkish 179 (models)	41A5284	1
Turkish 440 (models)	41A5285	1
UK (models)	41A5286	1
US European (models)	41A5287	1
Slovenian (models)	41A5288	1

6395 mice	FRU#	CRU
Optical wheel mouse (400DPI, USB) (models 11S 11D 11Y 11A 11T 12S 12D 12Y 12G 13S 13G 13C 13B 13H 14S 14D 14Y 14M 14A 14T 14K 14J 15M 15A 15Q 15T 16S 16G 17U 17F 17S 17D 17Y 17G 17M 17A 17T 17K 17J 18S 18D 18Y 18A 18Q 18T 18C 18B 18H 19S 19A 19Q 19T 19K 19J 21S 21D 21Y 21A 21Q 21T 21B 21H 21V 21K 21J 22B 22H 22V 23U 23F 23S 23L 23D 23Y 23G 23M 23A 23Q 23T 23C 23B 23H 23V 23K 23R 23E 23J 24U 24F 24G 24M 24A 24T 24K 24J 25S 25D 25Y 26U 26F 26M 26A 26Q 26T 26K 26J 27U 27F 28U 28F 29U 29F 29S 29L 29D 29Y 29G 29M 29A 29Q 29T 29C 29B 29H 29V 29K 29R 29E 29J 31U 31F 32S 32D 32Y 33S 33K 33J 33A 33Q 33T 34S 34D 34Y 34A 34Q 34T 34B 34H 34V 34K 34J 35B 35H 35V 36U 36F 36S 36L 36D 36Y 36G 36M 36A 36Q 36T 36C 36B 36H 36V 36K 36R 36E 36J 38A 38Q 38T 38K 39M 39A 39Q 39T 39K 39J 41M 41A 41Q 41T 41K 41J 42M 42A 42J 43M 43A 43Q 43T 43K 43J 44A 44Q 44T 24Q 45M 45A 45Q 45T 45K 45J 46M 46A 46Q 46T 46K 46J 47M 47A 47Q 47T 47K 47J 49M 49A 49Q 49T 49K 49J 51M 51A 51Q 51T 51K 51J 52M 52A 52Q 52T 52K 52J 33M 34M 61U 61F 61S 62U 63M 63A 63Q 63T 63K 63J 64M 64A 64Q 64T 64K 64J 65A 65Q 65T 65K 66G 67S 67Y 67M 67A 67T 67K 67J 68S 68Y 68G 68M 68A 68T 68K 68J 69S 69Y 81S 81Y 81M 81A 81Q 81T 81K 81J 82U 82F 82M 82A 82Q 82T 82K 82J 83U 83F 84U 84F 84M 84A 84Q 84T 84K 84J 85U 85F 86U 86F 87U 87F 88U 88F 89U 89F 54U 54F 55U 55F 56U 56F 57U 57F)	41U3013	1
Optical wheel mouse (400DPI, USB) (models 11S 11D 11Y 11A 11T 12S 12D 12Y 12G 13S 13G 13C 13B 13H 14S 14D 14Y 14M 14A 14T 14K 14J 15M 15A 15Q 15T 16S 16G 17U 17F 17S 17D 17Y 17G 17M 17A 17T 17K 17J 18S 18D 18Y 18A 18Q 18T 18C 18B 18H 19S 19A 19Q 19T 19K 19J 21S 21D 21Y 21A 21Q 21T 21B 21H 21V 21K 21J 22B 22H 22V 23U 23F 23S 23L 23D 23Y 23G 23M 23A 23Q 23T 23C 23B 23H 23V 23K 23R 23E 23J 24U 24F 24G 24M 24A 24T 24K 24J 25S 25D 25Y 26U 26F 26M 26A 26Q 26T 26K 26J 27U 27F 28U 28F 29U 29F 29S 29L 29D 29Y 29G 29M 29A 29Q 29T 29C 29B 29H 29V 29K 29R 29E 29J 31U 31F 32S 32D 32Y 33S 33K 33J 33A 33Q 33T 34S 34D 34Y 34A 34Q 34T 34B 34H 34V 34K 34J 35B 35H 35V 36U 36F 36S 36L 36D 36Y 36G 36M 36A 36Q 36T 36C 36B 36H 36V 36K 36R 36E 36J 38A 38Q 38T 38K 39M 39A 39Q 39T 39K 39J 41M 41A 41Q 41T 41K 41J 42M 42A 42J 43M 43A 43Q 43T 43K 43J 44A 44Q 44T 24Q 45M 45A 45Q 45T 45K 45J 46M 46A 46Q 46T 46K 46J 47M 47A 47Q 47T 47K 47J 49M 49A 49Q 49T 49K 49J 51M 51A 51Q 51T 51K 51J 52M 52A 52Q 52T 52K 52J 33M 34M 61U 61F 61S 62U 63M 63A 63Q 63T 63K 63J 64M 64A 64Q 64T 64K 64J 65A 65Q 65T 65K 66G 67S 67Y 67M 67A 67T 67K 67J 68S 68Y 68G 68M 68A 68T 68K 68J 69S 69Y 81S 81Y 81M 81A 81Q 81T 81K 81J 82U 82F 82M 82A 82Q 82T 82K 82J 83U 83F 84U 84F 84M 84A 84Q 84T 84K 84J 85U 85F 86U 86F 87U 87F 88U 88F 89U 89F 54U 54F 55U 55F 56U 56F 57U 57F)	41U3030	1
Scroll point optical mouse (800DPI, USB) (models)	41U3019	1

6395 Adapters and miscellaneous FRUs	FRU#	CRU
Modem daughter card (MDC 1.5) kit (models)	39T0495	2
Modem daughter card (MDC 1.5) kit internal cable /RJ11 (models)	41R8522	2
Lenovo branded speakers - 2 piece--primary (models)	41A5331	1
Lenovo branded speakers - 2 piece--secondary (models)	41A5334	1
Speaker power brick (models)	89P8571	1
Thermal grease syringe (models)	91P8835	N
Vertical PC stand (VPC) for blue 4.5L chassis (models)	41R4770	2

6395 Power Cords	FRU#	CRU
Power cord - US/Canada (models 11S 11D 12S 12D 13S 14S 14D 16S 17S 17D 18S 18D 19S 21S 21D 23S 23D 25S 25D 29S 29D 32S 32D 23L 29L 11A 11T 14A 14T 15A 15T 17A 17T 18A 18T 19A 19T 21A 21T 23A 23T 24A 24T 26A 26T 29A 29T 17U 17F 23U 23F 26U 26F 27U 27F 28U 28F 29U 29F 31U 31F 36U 37U 36F 37F 33S 34S 36S 34D 36D 33A 34A 36A 33T 34T 36T 38A 39A 41A 42A 43A 44A 45A 46A 47A 49A 51A 52A 38T 39T 41T 43T 44T 45T 46T 47T 49T 51T 52T 61U 61F 61S 62U 63A 64A 65A 67S 67A 68S 69S 82U 82F 83U 83F 84U 84F 84A 85U 85F 86U 86F 87U 87F 88U 88F 89U 89F 54U 54F 55U 55F 56U 56F 57U 57F)	42T5004	1
Power cord - Japan (models 14J 15J 17J 19J 21J 23J 24J 26J 36E 34J 33J 36J 39J 41J 42J 43J 45J 46J 47J 49J 51J 52J 63J 64J 67J 68J 82J 84J)	42T5011	1
Power cord - Argentina (models 23L 29L 11Y 12Y 14Y 17Y 18Y 21Y 23Y 25Y 29Y 32Y 36L 34Y 36Y)	42T5017	1
Power cord - Brazil (models)	42T5174	1
Power cord - Europe (Germany) (models 11A 14A 15A 17A 18A 19A 21A 23A 24A 26A 29A 33A 34A 36A 38A 39A 41A 42A 43A 44A 45A 46A 47A 49A 51A 52A 63A 64A 65A 67A 68A 81A 84A)	42T5029	1
Power cord - UK (models 11A 14A 15A 17A 18A 19A 21A 23A 24A 26A 29A 12G 13G 16G 17G 23G 24G 29G 33A 34A 36A 38A 39A 41A 42A 43A 44A 45A 46A 47A 49A 51A 52A 63A 64A 65A 67A 68A 81A 84A)	42T5035	1
Power cord - Denmark (models 12G 13G 16G 17G 23G 24G 29G 36G 37G)	42T5041	1
Power cord - Switzerland (models 12G 13G 16G 17G 23G 24G 29G 36G 37G 66G 68G)	42T5044	1
Power cord - Italy (models 23L 29L 11Y 12Y 14Y 17Y 18Y 21Y 23Y 25Y 29Y 32Y 11S 12S 13S 14S 16S 17S 18S 19S 21S 23S 25S 29S 32S 33S 34S 36S 34Y 36Y 67S 67Y 68S 68Y 69S 69Y 81S 81Y)	42T5047	1
Power cord - Australia / New Zealand (models 14M 15M 17M 23M 24M 26M 29M 36M 39M 41M 42M 43M 45M 46M 47M 49M 51M 52M 33M 34M 63M 64M 67M 68M 81M 82M 84M)	42T5050	1
Power cord - South Africa (models 14M 15M 17M 23M 24M 26M 29M 11A 14A 15A 17A 18A 19A 21A 23A 24A 26A 29A 12G 13G 16G 17G 23G 24G 29G 36G 37G 36M 39M 41M 42M 43M 45M 46M 47M 49M 51M 52M 33M 34M 38A 39A 41A 42A 43A 44A 45A 46A 47A 49A 51A 52A 63M 63A 64M 64A 65A 66G 67M 67A 68M 81M 81A 82M 84M)	42T5056	1
Power cord - Israel (models 12G 13G 16G 17G 23G 24G 29G 36G 37G)	42T5062	1
Power cord - China (PRC) (models 13C 18C 23C 29C 36C)	42T5065	1
Power cord - Taiwan (models 21V 22V 23V 29V 34V 35V 36V)	42T5071	1
Power cord - Korea (models 14K 17K 19K 21K 23K 24K 26K 29K 33K 34K 36K 36R 38K 39K 41K 43K 45K 46K 47K 49K 51K 52K 63K 64K 65K 67K 68K 82K 84K)	42T5077	1
Power cord - India (models 33Q 34Q 36Q 19Q 21Q 23Q 26Q 29Q 63Q 64Q 65Q 81Q 82Q 84Q)	42T5083	1
Power cord - Thailand (models 63T 64T 65T 67T 68T 81T 82T 84T)	42T4406	1
Power cord - US/Canada--optional second source (models 11S 11D 12S 12D 13S 14S 14D 16S 17S 17D 18S 18D 19S 21S 21D 23S 23D 25S 25D 29S 29D 32S 32D 23L 29L 11A 11T 14A 14T 15A 15T 17A 17T 18A 18T 19A 19T 21A 21T 23A 23T 24A 24T 26A 26T 29A 29T 17U 17F 23U 23F 26U 26F 27U 27F 28U 28F 29U 29F 31U 31F 36U 37U 36F 37F 33S 34S 36S 34D 36D 33A 34A 36A 33T 34T 36T 38A 39A 41A 42A 43A 44A 45A 46A 47A 49A 51A 52A 38T 39T 41T 43T 44T 45T 46T 47T 49T 51T 52T 61U 61F 61S 62U 63A 64A 65A 67S 67A 68S 69S 82U 82F 83U 83F 84U 84F 84A 85U 85F 86U 86F 87U 87F 88U 88F 89U 89F 54U 54F 55U 55F 56U 56F 57U 57F)	42T5089	1
Power cord - Japan-optional second source (models 14J 15J 17J 19J 21J 23J 24J 26J 36E 34J 33J 36J 39J 41J 42J 43J 45J 46J 47J 49J 51J 52J 63J 64J 67J 68J 82J 84J)	42T5096	1
Power cord - Argentina - optional second source (models 23L 29L 11Y 12Y 14Y 17Y 18Y 21Y 23Y 25Y 29Y 32Y 36L 34Y 36Y)	42T5102	1

6395 Power Cords	FRU#	CRU
Power cord - Brazil (new type) - optional second source (models)	42T5177	1
Power cord - Europe (Germany) - optional second source (models 11A 14A 15A 17A 18A 19A 21A 23A 24A 26A 29A 33A 34A 36A 38A 39A 41A 42A 43A 44A 45A 46A 47A 49A 51A 52A 63A 64A 65A 67A 68A 81A 84A)	42T5114	1
Power cord - UK - optional second source (models 11A 14A 15A 17A 18A 19A 21A 23A 24A 26A 29A 12G 13G 16G 17G 23G 24G 29G 33A 34A 36A 38A 39A 41A 42A 43A 44A 45A 46A 47A 49A 51A 52A 63A 64A 65A 67A 68A 81A 84A)	42T5120	1
Power cord - Denmark - optional second source (models 12G 13G 16G 17G 23G 24G 29G 36G 37G)	42T5126	1
Power cord - Switzerland - optional second source (models 12G 13G 16G 17G 23G 24G 29G 36G 37G 66G 68G)	42T5129	1
Power cord - Italy - optional second source (models 23L 29L 11Y 12Y 14Y 17Y 18Y 21Y 23Y 25Y 29Y 32Y 11S 12S 13S 14S 16S 17S 18S 19S 21S 23S 25S 29S 32S 33S 34S 36S 34Y 36Y 67S 67Y 68S 68Y 69S 69Y 81S 81Y)	42T5132	1
Power cord - Australia/New Zealand - optional second source (models 14M 15M 17M 23M 24M 26M 29M 36M 39M 41M 42M 43M 45M 46M 47M 49M 51M 52M 33M 34M 63M 64M 67M 68M 81M 82M 84M)	42T5135	1
Power cord - South Africa - optional second source (models 14M 15M 17M 23M 24M 26M 29M 11A 14A 15A 17A 18A 19A 21A 23A 24A 26A 29A 12G 13G 16G 17G 23G 24G 29G 36G 37G 36M 39M 41M 42M 43M 45M 46M 47M 49M 51M 52M 33M 34M 38A 39A 41A 42A 43A 44A 45A 46A 47A 49A 51A 52A 63M 63A 64M 64A 65A 66G 67M 67A 68M 81M 81A 82M 84M)	42T5141	1
Power cord - Israel - optional second source (models 12G 13G 16G 17G 23G 24G 29G 36G 37G)	42T5147	1
Power cord - China (PRC) - optional second source (models 13C 18C 23C 29C 36C)	42T5150	1
Power cord - Taiwan-optional second source (models 21V 22V 23V 29V 34V 35V 36V)	42T5156	1
Power cord - Korea-optional second source (models 14K 17K 19K 21K 23K 24K 26K 29K 33K 34K 36K 36R 38K 39K 41K 43K 45K 46K 47K 49K 51K 52K 63K 64K 65K 67K 68K 82K 84K)	42T5162	1
Power cord - India-optional second source (models 33Q 34Q 36Q 19Q 21Q 23Q 26Q 29Q 63Q 64Q 65Q 81Q 82Q 84Q)	42T5168	1
Power cord - Thailand-optional second source (models 63T 64T 65T 67T 68T 81T 82T 84T)	42T4400	1

6395 Windows XP Home Recovery CDs	FRU#	CRU
US/UK/AP/TH (models)	45R6005	1
FR/CF (models)	45R6006	1
GR (models)	45R6007	1
IT (models)	45R6010	1
BR (models)	45R6009	1
SP/LA (models)	45R6008	1
DK (models)	45R6014	1
NL (models)	45R6015	1
AE (models)	45R6020	1
SV (models)	45R6013	1
HE (models)	45R6018	1
FI (models)	45R6017	1

6395 Windows XP Home Recovery CDs	FRU#	CRU
NO (models)	45R6012	1
PL (models)	45R6019	1
PO (models)	45R6030	1
RU (models)	45R6021	1
RE (models)	45R6029	1
HU (models)	45R6023	1
CZ (models)	45R6016	1
TR (models)	45R6022	1
GK (models)	45R6024	1
Japanese (models)	45R6011	1
Simplified Chinese (models)	45R6025	1
Taiwan- TC (models)	45R6026	1
Hong Kong- TC (models)	45R6027	1
Korea (models)	45R6028	1

6395 Windows XP Pro Recovery CDs	FRU#	CRU
US/UK/AP/TH (models 39M 39A 39Q 41M 41A 41Q 43M 43A 43Q 45M 45A 45Q 63M 63A 63Q 82U 82M 82A 82Q 83U 84U 84M 84A 84Q 85U 86U 87U 88U 89U 54U 55U 56U 57U)	45R5979	1
FR/CF (models 82F 83F 84F 85F 86F 87F 88F 89F 54F 55F 57F 56F)	45R5980	1
GR (models)	45R5981	1
IT (models)	45R5984	1
BR (models)	45R5983	1
SP/LA (models)	45R5982	1
DK (models)	45R5988	1
NL (models)	45R5989	1
AE (models)	45R5994	1
SV (Swedish) (models)	45R5987	1
HE (models)	45R5992	1
FI (models)	45R5991	1
NO (models)	45R5986	1
PL (models)	45R5993	1
PO (models)	45R6004	1
RU (models)	45R5995	1
RE (models)	45R6003	1
HU (models)	45R5997	1
CZ (models)	45R5990	1
TR (models)	45R5996	1
GK (models)	45R5998	1
Japanese (models 39J 41J 43J 45J 63J 82J 84J)	45R5985	1

6395 Windows XP Pro Recovery CDs	FRU#	CRU
Simplified Chinese (models)	45R5999	1
Taiwan-TC (models)	45R6000	1
Hong Kong-TC (models)	45R6001	1
Korea (models 39K 41K 43K 45K 63K 82K 84K)	45R6002	1
Multilingual 1 XP-P -- EN, NL, FR, GR, IT (models)	45R5977	1
Multilingual 2 XP-P -- EN, DK, FI, NO, SV (models)	45R5978	1

6395 Vista Home Basic 32 Recovery DVDs	FRU#	CRU
English (models 13H)	46R7098	1
Russian English (models)	46R7099	1
French (models)	46R7100	1
German (models)	46R7101	1
Spanish (models)	46R7102	1
Brazilian (models)	46R7103	1
Italian (models)	46R7104	1
Japanese (models)	46R7105	1
Norwegian (models)	46R7106	1
Swedish (models)	46R1086	1
Danish (models)	46R7107	1
Dutch (models)	46R1088	1
Czech (models)	46R1089	1
Finnish (models)	46R1090	1
Polish (models)	46R1091	1
Russian (models)	46R7108	1
Turkish (models)	46R1093	1
Hungarian (models)	46R1094	1
Greek (models)	46R1095	1
Simplified Chinese (models)	46R7109	1
Taiwan (models)	46R7110	1
Hong Kong (models)	46R7111	1
Korea (models)	46R1099	1
Slovenian (models)	46R1100	1
Hebrew (models)	46R1101	1
Portuguese (models)	46R1102	1
Arabic Localized (models)	46R1103	1
Slovakia (models)	46R1104	1

6395 Vista Business 32 Recovery DVDs	FRU#	CRU
English (models 15Q)	46R7070	1
Russian (models)	46R7071	1
French (models)	46R7072	1
German (models)	46R7073	1
Spanish (models 15S 15D 15Y 17S 17Y 18S 18Y)	46R7074	1
Brazilian (models)	46R7075	1
Italian (models)	46R7076	1
Japanese (models)	46R7077	1
Norwegian (models)	46R7078	1
Swedish (models)	46R1028	1
Danish (models)	46R7079	1
Dutch (models)	46R1030	1
Czech (models)	46R1031	1
Finnish (models)	46R1032	1
Polish (models)	46R1033	1
Russian (models)	46R7080	1
Turkish (models)	46R1035	1
Hungarian (models)	46R1036	1
Greek (models)	46R1037	1
Simplified Chinese (models 15C)	46R7081	1
Traditional Chinese (models)	46R7082	1
Traditional Chinese (models)	46R7083	1
Korean (models)	46R1041	1
Slovenian (models)	46R1042	1
Romanian (models)	46R1043	1
Portuguese (models)	46R1044	1
Serbian - Latin (models)	46R1045	1
Slovakian (models)	46R1046	1
Arabic Localized (models)	46R1047	1
Hebrew (models)	46R1048	1

6395 Vista Ultimate 32 Recovery DVDs	FRU#	CRU
English (models)	46R7112	1
Russian (models)	46R7113	1
French (models)	46R7114	1
German (models)	46R7115	1
Spanish (models)	46R7116	1
Brazilian (models)	46R7117	1
Italian (models)	46R7118	1

6395 Vista Ultimate 32 Recovery DVDs	FRU#	CRU
Japanese (models)	46R7119	1
Norwegian (models)	46R7120	1
Swedish (models)	46R1114	1
Danish (models)	46R7121	1
Dutch (models)	46R1116	1
Czech (models)	46R1117	1
Finnish (models)	46R1118	1
Polish (models)	46R1119	1
Russian (models)	46R7122	1
Turkish (models)	46R1121	1
Hungarian (models)	46R1122	1
Greek (models)	46R1123	1
Simplified Chinese (models)	46R7123	1
Traditional Chinese (models)	46R7124	1
Traditional Chinese (models)	46R7125	1
Korean (models)	46R1127	1
Slovenian (models)	46R1128	1
Hebrew (models)	46R1129	1
Portuguese (models)	46R1130	1
Slovakian (models)	46R1131	1
Arabic Localized (models)	46R1132	1

6395 Vista Business 64 Recovery DVDs	FRU#	CRU
English (models)	46R7084	1
Russian English (models)	46R7085	1
French (models)	46R7086	1
German (models)	46R7087	1
Spanish (models)	46R7088	1
Brazilian (models)	46R7089	1
Italian (models)	46R7090	1
Japanese (models)	46R7091	1
Norwegian (models)	46R7092	1
Swedish (models)	46R1058	1
Danish (models)	46R7093	1
Dutch (models)	46R1060	1
Czech (models)	46R1061	1
Finnish (models)	46R1062	1
Polish (models)	46R1063	1
Russian (models)	46R7094	1

6395 Vista Business 64 Recovery DVDs	FRU#	CRU
Turkish (models)	46R1065	1
Hungarian (models)	46R1066	1
Greek (models)	46R1067	1
Simplified Chinese (models)	46R7095	1
Taiwan (models)	46R7096	1
Hong Kong (models)	46R7097	1
Korea (models)	46R1071	1
Slovenian (models)	46R1072	1
Arabic Localized (models)	46R1073	1
Hebrew (models)	46R1074	1
Portuguese (models)	46R1075	1
Slovakian (models)	46R1076	1

Machine Type 6396

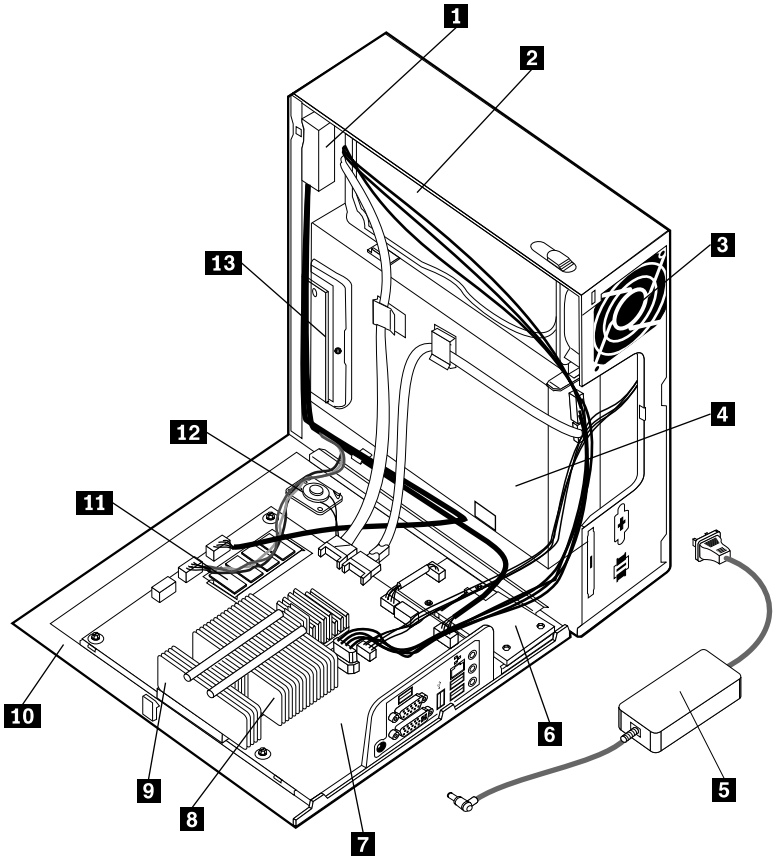

Item #	6396 FRUs	FRU#	CRU
1	Front audio/USB card and cable (included in Cables kit 41R8510) (models)	41R8510	N
2	Hard disk drive, 80 GB 7200rpm SATA (models)	40Y9034	2

Item #	6396 FRUs	FRU#	CRU
2	Hard disk drive, 160 GB 7200rpm SATA (models)	40Y9035	2
2	Hard disk drive, 25 GB 7200rpm SATA (models)	40Y9036	2
2	Hard disk drive, 320 GB 7200rpm SATA (models)	87H4891	2
2	Hard disk drive, 500 GB 7200rpm SATA (models)	41X5582	2
2	Hard disk drive, 750 GB 7200rpm SATA (models)	43C3671	2
2	Hard disk drive, 1TB 7200rpm SATA (models CTO)	45C5973	2
3	System fan (models)	41R8511	2
4	DVD-ROM Drive - 16x/48x - SATA (models)	41N3325	2
4	DVD-ROM Drive - DVD-RW/CD-RW Rambo 8 (SATA) Matrix (models)	43C1042	2
4	DVD-ROM Drive - DVD-ROM/CD-RW Combo Drive - 48x/32x/48x/16x - SATA Matrix (models)	42Y9353	2
5	Power Adapter, 120W AC/DC (models)	41A9732	1
5	Power Adapter, 120W power adapter (models)	41A9747	1
6	Express Card Assembly (models)	41R8570	N
7	System board, Mini-ITX Intel (Q35, ICH9DO) (models)	46R3849	N
7	System board, non-AMT Mini-ITX Intel (Q35, ICH9DO) (models)	46R3848	N
8	Microprocessor, Intel Conroe E6750 (Core2 Duo) 2.66GHz, G-0 Stepping, 65nm, 1333MHZ FSB, 4MB L2 (models)	45C6898	N
8	Microprocessor, Intel Conroe E6550 (Core2 Duo) 2.33GHz, G-0 Stepping, 65nm, 1333MHz FSB, 4MB L2 (models)	45C6899	N
8	Microprocessor, Intel Conroe E4500 (Core2 Duo) 2.20GHz, M-0 Stepping, 65nm, 800MHz FSB, 2MB L2 (models)	45C6900	N
8	Microprocessor, Intel Conroe E2160 (Pentium D) 1.8GHz, M-0 Stepping, 65nm, 800MHz FSB, 1MB L2 (models)	45C6901	N
8	Microprocessor, Intel Conroe-L 440 (Celeron) 2.0GHz, A-1 Stepping, 65nm, 800MHz FSB, 512KB L2 (models)	45C6902	N
8	Microprocessor, Intel Wolfdale E8400 (Core2 Duo) 3.0GHz, C-0 Stepping, 45nm, 1333MHz FSB, 6MB L2 (models)	45C8499	N
8	Microprocessor, Intel Wolfdale E8200 (Core2 Duo) 2.66GHz, C-0 Stepping, 45nm, 1333MHz FSB, 6MB L2 (models)	45C8531	N
8	Microprocessor, E7200, 2.53GHz, 1066MHz FSB, 3MB L2 (models)	46R4261	N
8	Microprocessor, E2200, 2.20GHz, 800MHz FSB, 1MB L2 (models)	46R4260	N
9	Heat sink Intel (models)	41R8545	2
11	Memory module, 512MB DDR2 PC2-5300 (667MHz) SoDIMM (models)	43C3814	2
11	Memory module, 1GB DDR2 PC2-5300 (667MHz) SoDIMM (models)	43C3815	2
11	Memory module, 2GB DDR2 PC2-5300 (667MHz) SoDIMM (models)	43C6489	2
12	Internal speaker (models)	41R8517	2
13	Media card reader (models)	41R8568	N

The FRUs listed in the following tables are not illustrated.

6396 FRUs	FRU#	CRU
Hard disk drive tray (models)	41R8518	2
Shield kit (models)	41R8543	N
Cable, C2 swtich/housing assembly (models)	41R8544	N
Cable, serial (models)	41R8548	N
USB cable (models)	41R8560	N
Kit, shell (models)	41R8563	N

6396 Keyboards (USB Preferred Pro)	FRU#	CRU
US English (models)	41A5289	1
Arabic (models)	41A5290	1
Arabic/French (models)	41A5291	1
Belgian/French (models)	41A5292	1
Belgian/UK (models)	41A5293	1
Brazilian (models)	41A5294	1
Bulgarian (models)	41A5295	1
Hong Kong/Taiwan (models)	41A5296	1
Czech (models)	41A5297	1
Danish (models)	41A5298	1
Dutch (models)	41A5299	1
French (models)	41A5300	1
French Canadian 445 (models)	41A5301	1
French Canadian 58 (models)	41A5302	1
German (models)	41A5303	1
Greek (models)	41A5304	1
Greek/US (models)	41A5305	1
Hebrew (models)	41A5306	1
Hungarian (models)	41A5307	1
Iceland (models)	41A5308	1
Italian (models)	41A5309	1
Japanese (models)	41A5310	1
Korean (models)	41A5311	1
LA Spanish (models)	41A5312	1
Norwegian (models)	41A5313	1
Polish (models)	41A5314	1
Portuguese (models)	41A5315	1
Romanian 446 (models)	41A5316	1
Romanian 096 (models)	41A5317	1
Russian/Cyrillic (models)	41A5318	1
Serbian/Cyrillic (models)	41A5319	1

6396 Keyboards (USB Preferred Pro)	FRU#	CRU
Slovak (models)	41A5320	1
Spanish (models)	41A5321	1
Swedish/Finn (models)	41A5322	1
Swiss (models)	41A5323	1
Thailand (models)	41A5324	1
Turkish 440 (models)	41A5325	1
Turkish 179 (models)	41A5326	1
UK English (models)	41A5327	1
US European (models)	41A5328	1
Slovenian (models)	41A5329	1

6396 Keyboard (USB Preferred Pro Fingerprint Keyboard)	FRU#	CRU
US (models)	41A5248	1
Arabic (models)	41A5249	1
Arabic/French (models)	41A5250	1
Belgian/French (models)	41A5251	1
Belgian/UK (models)	41A5252	1
Brazil/Portuguese (models)	41A5253	1
Bulgarian (models)	41A5254	1
Chinese/US (models)	41A5255	1
Czech (models)	41A5256	1
Danish (models)	41A5257	1
Dutch (models)	41A5258	1
French (models)	41A5259	1
French Canadian 445 (models)	41A5260	1
French Canadian 58 (models)	41A5261	1
German (models)	41A5262	1
Greek (models)	41A5263	1
Greek/US (models)	41A5264	1
Hebrew (models)	41A5265	1
Hungarian (models)	41A5266	1
Iceland (models)	41A5267	1
Italian (models)	41A5268	1
Japanese (models)	41A5269	1
Korean (models)	41A5270	1
LA Spanish (models)	41A5271	
Norwegian (models)	41A5272	1
Polish (models)	41A5273	1
Portuguese (models)	41A5274	1

6396 Keyboard (USB Preferred Pro Fingerprint Keyboard)	FRU#	CRU
Romanian 446 (models)	41A5276	1
Romanian 96 (models)	41A5275	1
Russian/Cyrillic (models)	41A5277	1
Serbian/Cyrillic (models)	41A5278	1
Slovak (models)	41A5279	1
Spanish (models)	41A5280	1
Swedish/Finn (models)	41A5281	1
Swiss, F/G (models)	41A5282	1
Thailand (models)	41A5283	1
Turkish 179 (models)	41A5284	1
Turkish 440 (models)	41A5285	1
UK (models)	41A5286	1
US European (models)	41A5287	1
Slovenian (models)	41A5288	1

6396 mice	FRU#	CRU
Optical wheel mouse (400DPI, USB) (models)	41U3013	1
Optical wheel mouse (400DPI, USB) (models)	41U3030	1
Scroll point optical mouse (800DPI, USB) (models)	41U3019	1

6396 Adapters and miscellaneous FRUs	FRU#	CRU
Modem daughter card (MDC 1.5) kit (models)	39T0495	2
Modem daughter card (MDC 1.5) kit Internal cable /RJ11 (models)	41R8522	2
Lenovo branded speakers - 2 piece--primary (models)	41A5331	1
Lenovo branded speakers - 2 piece--secondary (models)	41A5334	1
Speaker power brick (models)	89P8571	1
Thermal grease syringe (models)	91P8835	N
Vertical PC stand (VPC) for blue 4.5L chassis (models)	41R4770	2
PWR/LED cable sssembly (models)	41R8555	N

6396 Power Cords	FRU#	CRU
Power cord - US/Canada (models)	42T5004	1
Power cord - Japan (models)	42T5011	1
Power cord - Argentina (models)	42T5017	1
Power cord - Brazil (models)	42T5174	1
Power cord - Europe (Germany) (models)	42T5029	1
Power cord - UK (models)	42T5035	1
Power cord - Denmark (models)	42T5041	1
Power cord - Switzerland (models)	42T5044	1

6396 Power Cords	FRU#	CRU
Power cord - Italy (models)	42T5047	1
Power cord - Australia / New Zealand (models)	42T5050	1
Power cord - South Africa (models)	42T5056	1
Power cord - Israel (models)	42T5062	1
Power cord - China (PRC) (models)	42T5065	1
Power cord - Taiwan (models)	42T5071	1
Power cord - Korea (models)	42T5077	1
Power cord - India (models)	42T5083	1
Power cord - Thailand (models)	42T4406	1
Power cord - US/Canada--optional second source (models)	42T5089	1
Power cord - Japan-optional second source (models)	42T5096	1
Power cord - Argentina - optional second source (models)	42T5102	1
Power cord - Brazil (new type) - optional second source (models)	42T5177	1
Power cord - Europe (Germany) - optional second source (models)	42T5114	1
Power cord - UK - optional second source (models)	42T5120	1
Power cord - Denmark - optional second source (models	42T5126	1
Power cord - Switzerland - optional second source (models)	42T5129	1
Power cord - Italy - optional second source (models)	42T5132	1
Power cord - Australia/New Zealand - optional second source (models)	42T5135	1
Power cord - South Africa - optional second source (models)	42T5141	1
Power cord - Israel - optional second source (models)	42T5147	1
Power cord - China (PRC) - optional second source (models)	42T5150	1
Power cord - Taiwan-optional second source (models)	42T5156	1
Power cord - Korea-optional second source (models)	42T5162	1
Power cord - India-optional second source (models)	42T5168	1
Power cord - Thailand-optional second source (models)	42T4400	1

6396 Windows XP Home Recovery CDs	FRU#	CRU
US/UK/AP/TH (models)	45R6005	1
FR/CF (models)	45R6006	1
GR (models)	45R6007	1
IT (models)	45R6010	1
BR (models)	45R6009	1
SP/LA (models)	45R6008	1
DK (models)	45R6014	1
NL (models)	45R6015	1
AE (models)	45R6020	1
SV (models)	45R6013	1
HE (models)	45R6018	1

6396 Windows XP Home Recovery CDs	FRU#	CRU
FI (models)	45R6017	1
NO (models)	45R6012	1
PL (models)	45R6019	1
PO (models)	45R6030	1
RU (models)	45R6021	1
RE (models)	45R6029	1
HU (models)	45R6023	1
CZ (models)	45R6016	1
TR (models)	45R6022	1
GK (models)	45R6024	1
Japanese (models)	45R6011	1
Simplified Chinese (models)	45R6025	1
Taiwan-TC (models)	45R6026	1
Hong Kong-TC (models)	45R6027	1
Korea (models)	45R6028	1

6396 Windows XP Pro Recovery CDs	FRU#	CRU
US/UK/AP/TH (models)	45R5979	1
FR/CF (models)	45R5980	1
GR (models)	45R5981	1
IT (models)	45R5984	1
BR (models)	45R5983	1
SP/LA (models)	45R5982	1
DK (models)	45R5988	1
NL (models)	45R5989	1
AE (models)	45R5994	1
SV (Swedish) (models)	45R5987	1
HE (models)	45R5992	1
FI (models)	45R5991	1
NO (models)	45R5986	1
PL (models)	45R5993	1
PO (models)	45R6004	1
RU (models)	45R5995	1
RE (models)	45R6003	1
HU (models)	45R5997	1
CZ (models)	45R5990	1
TR (models)	45R5996	1
GK (models)	45R5998	1
Japanese (models)	45R5985	1

6396 Windows XP Pro Recovery CDs	FRU#	CRU
Simplified Chinese (models)	45R5999	1
Taiwan-TC (models)	45R6000	1
Hong Kong-TC (models)	45R6001	1
Korea (models)	45R6002	1
Multilingual 1 XP-P -- EN, NL, FR, GR, IT (models)	45R5977	1
Multilingual 2 XP-P -- EN, DK, FI, NO, SV (models)	45R5978	1

6396 Vista Home Basic 32 Recovery DVDs	FRU#	CRU
English (models 13H)	46R7098	1
Russian English (models)	46R7099	1
French (models)	46R7100	1
German (models)	46R7101	1
Spanish (models)	46R7102	1
Brazilian (models)	46R7103	1
Italian (models)	46R7104	1
Japanese (models)	46R7105	1
Norwegian (models)	46R7106	1
Swedish (models)	46R1086	1
Danish (models)	46R7107	1
Dutch (models)	46R1088	1
Czech (models)	46R1089	1
Finnish (models)	46R1090	1
Polish (models)	46R1091	1
Russian (models)	46R7108	1
Turkish (models)	46R1093	1
Hungarian (models)	46R1094	1
Greek (models)	46R1095	1
Simplified Chinese (models)	46R7109	1
Taiwan (models)	46R7110	1
Hong Kong (models)	46R7111	1
Korea (models)	46R1099	1
Slovenian (models)	46R1100	1
Hebrew (models)	46R1101	1
Portuguese (models)	46R1102	1
Arabic Localized (models)	46R1103	1
Slovakia (models)	46R1104	1

6396 Vista Business 32 Recovery DVDs	FRU#	CRU
English (models 15Q)	46R7070	1
Russian (models)	46R7071	1
French (models)	46R7072	1
German (models)	46R7073	1
Spanish (models 15S 15D 15Y 17S 17Y 18S 18Y)	46R7074	1
Brazilian (models)	46R7075	1
Italian (models)	46R7076	1
Japanese (models)	46R7077	1
Norwegian (models)	46R7078	1
Swedish (models)	46R1028	1
Danish (models)	46R7079	1
Dutch (models)	46R1030	1
Czech (models)	46R1031	1
Finnish (models)	46R1032	1
Polish (models)	46R1033	1
Russian (models)	46R7080	1
Turkish (models)	46R1035	1
Hungarian (models)	46R1036	1
Greek (models)	46R1037	1
Simplified Chinese (models 15C)	46R7081	1
Traditional Chinese (models)	46R7082	1
Traditional Chinese (models)	46R7083	1
Korean (models)	46R1041	1
Slovenian (models)	46R1042	1
Romanian (models)	46R1043	1
Portuguese (models)	46R1044	1
Serbian - Latin (models)	46R1045	1
Slovakian (models)	46R1046	1
Arabic Localized (models)	46R1047	1
Hebrew (models)	46R1048	1

6396 Vista Ultimate 32 Recovery DVDs	FRU#	CRU
English (models)	46R7112	1
Russian (models)	46R7113	1
French (models)	46R7114	1
German (models)	46R7115	1
Spanish (models)	46R7116	1
Brazilian (models)	46R7117	1
Italian (models)	46R7118	1

6396 Vista Ultimate 32 Recovery DVDs	FRU#	CRU
Japanese (models)	46R7119	1
Norwegian (models)	46R7120	1
Swedish (models)	46R1114	1
Danish (models)	46R7121	1
Dutch (models)	46R1116	1
Czech (models)	46R1117	1
Finnish (models)	46R1118	1
Polish (models)	46R1119	1
Russian (models)	46R7122	1
Turkish (models)	46R1121	1
Hungarian (models)	46R1122	1
Greek (models)	46R1123	1
Simplified Chinese (models)	46R7123	1
Traditional Chinese (models)	46R7124	1
Traditional Chinese (models)	46R7125	1
Korean (models)	46R1127	1
Slovenian (models)	46R1128	1
Hebrew (models)	46R1129	1
Portuguese (models)	46R1130	1
Slovakian (models)	46R1131	1
Arabic Localized (models)	46R1132	1

6396 Vista Business 64 Recovery DVDs	FRU#	CRU
English (models)	46R7084	1
Russian English (models)	46R7085	1
French (models)	46R7086	1
German (models)	46R7087	1
Spanish (models)	46R7088	1
Brazilian (models)	46R7089	1
Italian (models)	46R7090	1
Japanese (models)	46R7091	1
Norwegian (models)	46R7092	1
Swedish (models)	46R1058	1
Danish (models)	46R7093	1
Dutch (models)	46R1060	1
Czech (models)	46R1061	1
Finnish (models)	46R1062	1
Polish (models)	46R1063	1
Russian (models)	46R7094	1

6396 Vista Business 64 Recovery DVDs	FRU#	CRU
Turkish (models)	46R1065	1
Hungarian (models)	46R1066	1
Greek (models)	46R1067	1
Simplified Chinese (models)	46R7095	1
Taiwan (models)	46R7096	1
Hong Kong (models)	46R7097	1
Korea (models)	46R1071	1
Slovenian (models)	46R1072	1
Arabic Localized (models)	46R1073	1
Hebrew (models)	46R1074	1
Portuguese (models)	46R1075	1
Slovakian (models)	46R1076	1

Machine Type 6397

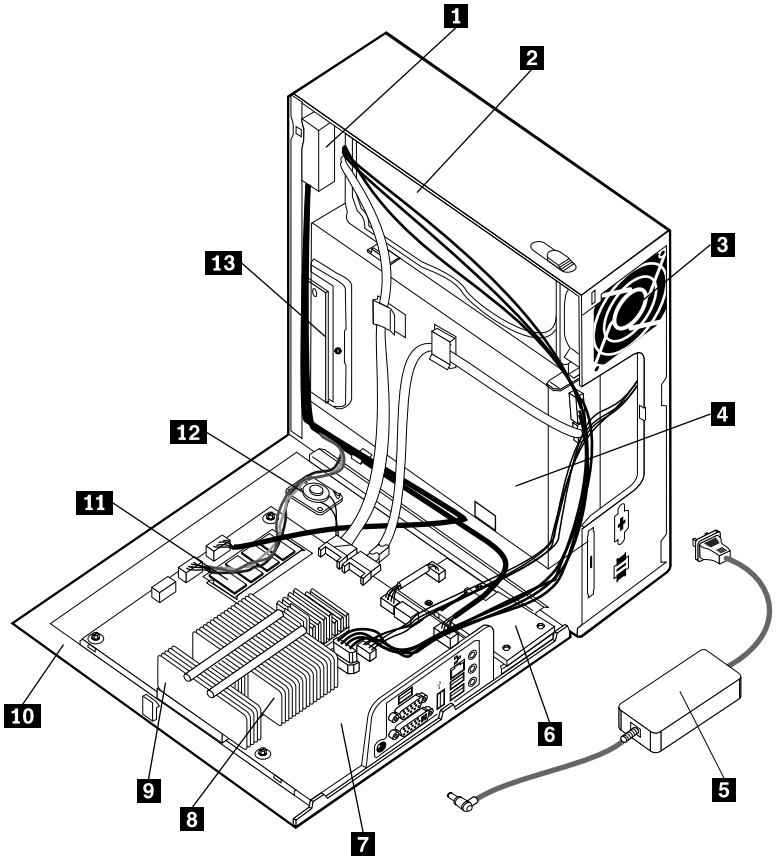

Item #	6397 FRUs	FRU#	CRU
1	Front audio/USB card and cable (included in Cables kit 41R8510) (all models)	41R8510	N
2	Hard disk drive, 80 GB 7200rpm SATA (models)	40Y9034	2

Item #	6397 FRUs	FRU#	CRU
2	Hard disk drive, 160 GB 7200rpm SATA (models 11U 11F 11S 11L 11D 11Y 11G 11M 11A 11Q 11T 11C 11B 11H 11V 11K 11R 11E 11J)	40Y9035	2
2	Hard disk drive, 25 GB 7200rpm SATA (models)	40Y9036	2
2	Hard disk drive, 320 GB 7200rpm SATA (models)	87H4891	2
2	Hard disk drive, 500 GB 7200rpm SATA (models)	41X5582	2
2	Hard disk drive, 750 GB 7200rpm SATA (models)	43C3671	2
2	Hard disk drive, 1TB 7200rpm SATA (models CTO)	45C5973	2
3	System fan (all models)	41R8511	2
4	DVD-ROM Drive - 16x/48x - SATA (models 11U 11F 11S 11L 11D 11Y 11G 11M 11A 11Q 11T 11C 11B 11H 11V 11K 11R 11E 11J)	41N3325	2
4	DVD-ROM Drive - DVD-RW/CD-RW Rambo 8 (SATA) Matrix (models)	43C1042	2
4	DVD-ROM Drive - DVD-ROM/CD-RW Combo Drive - 48x/32x/48x/16x - SATA Matrix (models)	42Y9353	2
5	Power adapter, 120W AC/DC (models 11U 11F 11S 11L 11D 11Y 11G 11M 11A 11Q 11T 11C 11B 11H 11V 11K 11R 11E 11J)	41A9732	1
5	Power adapter, 120W power adapter (models)	41A9747	1
6	Express card assembly (all models)	41R8570	N
7	System board, Mini-ITX Intel (Q35, ICH9DO) (models 11U 11F 11S 11L 11D 11Y 11G 11M 11A 11Q 11T 11C 11B 11H 11V 11K 11R 11E 11J)	46R3849	N
7	System board, non-AMT Mini-ITX Intel (Q35, ICH9DO) (models)	46R3848	N
8	Microprocessor, Intel Conroe E6750 (Core2 Duo) 2.66GHz, G-0 Stepping, 65nm, 1333MHZ FSB, 4MB L2 (models)	45C6898	N
8	Microprocessor, Intel Conroe E6550 (Core2 Duo) 2.33GHz, G-0 Stepping, 65nm, 1333MHz FSB, 4MB L2 (models)	45C6899	N
8	Microprocessor, Intel Conroe E4500 (Core2 Duo) 2.20GHz, M-0 Stepping, 65nm, 800MHz FSB, 2MB L2 (models)	45C6900	N
8	Microprocessor, Intel Conroe E2160 (Pentium D) 1.8GHz, M-0 Stepping, 65nm, 800MHz FSB, 1MB L2 (models)	45C6901	N
8	Microprocessor, Intel Conroe-L 440 (Celeron) 2.0GHz, A-1 Stepping, 65nm, 800MHz FSB, 512KB L2 (models)	45C6902	N
8	Microprocessor, Intel Wolfdale E8400 (Core2 Duo) 3.0GHz, C-0 Stepping, 45nm, 1333MHz FSB, 6MB L2 (models)	45C8499	N
8	Microprocessor, Intel Wolfdale E8200 (Core2 Duo) 2.66GHz, C-0 Stepping, 45nm, 1333MHz FSB, 6MB L2 (models 11U 11F 11S 11L 11D 11Y 11G 11M 11A 11Q 11T 11C 11B 11H 11V 11K 11R 11E 11J)	45C8531	N
8	Microprocessor, E7200, 2.53GHz, 1066MHz FSB, 3MB L2 (models)	46R4261	N
8	Microprocessor, E2200, 2.20GHz, 800MHz FSB, 1MB L2 (models)	46R4260	N
9	Heat sink Intel (all models)	41R8545	2
11	Memory module, 512MB DDR2 PC2-5300 (667MHz) SoDIMM (all models)	43C3814	2
11	Memory module, 1GB DDR2 PC2-5300 (667MHz) SoDIMM (models)	43C3815	2
11	Memory module, 2GB DDR2 PC2-5300 (667MHz) SoDIMM (models 11U 11F 11S 11L 11D 11Y 11G 11M 11A 11Q 11T 11C 11B 11H 11V 11K 11R 11E 11J)	43C6489	2

Item #	6397 FRUs	FRU#	CRU
12	Internal speaker (all models)	41R8517	2
13	Media card reader (all models)	41R8568	N

The FRUs listed in the following tables are not illustrated.

6397 FRUs	FRU#	CRU
Hard disk drive tray (all models)	41R8518	2
Shield kit (all models)	41R8543	N
Cable, C2 swtich/housing assembly (all models)	41R8544	N
Cable, serial (all models)	41R8548	N
USB cable (all models)	41R8560	N
Kit, shell (all models)	41R8563	N
PWR/LED cable assembly (all models)	41R8555	N

6397 Keyboards (USB Preferred Pro)	FRU#	CRU
US English (models 11U 11G 11M 11A 11Q 11H 11R 11E)	41A5289	1
Arabic (models)	41A5290	1
Arabic/French (models 11G)	41A5291	1
Belgian/French (models 11G)	41A5292	1
Belgian/UK (models 11G)	41A5293	1
Brazilian (models)	41A5294	1
Bulgarian (models 11G)	41A5295	1
Hong Kong/Taiwan (models 11B 11V)	41A5296	1
Czech (models 11G)	41A5297	1
Danish (models 11G)	41A5298	1
Dutch (models 11G)	41A5299	1
French (models 11G)	41A5300	1
French Canadian 445 (models 11F)	41A5301	1
French Canadian 58 (models 11F)	41A5302	1
German (models 11G)	41A5303	1
Greek (models 11G)	41A5304	1
Greek/US (models 11G)	41A5305	1
Hebrew (models 11G)	41A5306	1
Hungarian (models 11G)	41A5307	1
Iceland (models 11G)	41A5308	1
Italian (models 11G)	41A5309	1
Japanese (models 11K)	41A5310	1
Korean (models 11J)	41A5311	1
LA Spanish (models 11S 11D 11Y)	41A5312	1

6397 Keyboards (USB Preferred Pro)	FRU#	CRU
Norwegian (models 11G)	41A5313	1
Polish (models 11G)	41A5314	1
Portuguese (models 11G)	41A5315	1
Romanian 446 (models 11G)	41A5316	1
Romanian 096 (models 11G)	41A5317	1
Russian/Cyrillic (models 11G)	41A5318	1
Serbian/Cyrillic (models 11G)	41A5319	1
Slovak (models 11G)	41A5320	1
Spanish (models 11G)	41A5321	1
Swedish/Finn (models 11G)	41A5322	1
Swiss (models 11G)	41A5323	1
Thailand (models 11T)	41A5324	1
Turkish 440 (models 11G)	41A5325	1
Turkish 179 (models 11G)	41A5326	1
UK English (models 11G)	41A5327	1
US European (models 11G)	41A5328	1
Slovenian (models 11G)	41A5329	1

6397 Keyboard (USB Preferred Pro Fingerprint Keyboard)	FRU#	CRU
US (models)	41A5248	1
Arabic (models)	41A5249	1
Arabic/French (models)	41A5250	1
Belgian/French (models)	41A5251	1
Belgian/UK (models)	41A5252	1
Brazil/Portuguese (models)	41A5253	1
Bulgarian (models)	41A5254	1
Chinese/US (models)	41A5255	1
Czech (models)	41A5256	1
Danish (models)	41A5257	1
Dutch (models)	41A5258	1
French (models)	41A5259	1
French Canadian 445 (models)	41A5260	1
French Canadian 58 (models)	41A5261	1
German (models)	41A5262	1
Greek (models)	41A5263	1
Greek/US (models)	41A5264	1
Hebrew (models)	41A5265	1
Hungarian (models)	41A5266	1
Iceland (models)	41A5267	1

6397 Keyboard (USB Preferred Pro Fingerprint Keyboard)	FRU#	CRU
Italian (models)	41A5268	1
Japanese (models)	41A5269	1
Korean (models)	41A5270	1
LA Spanish (models)	41A5271	
Norwegian (models)	41A5272	1
Polish (models)	41A5273	1
Portuguese (models)	41A5274	1
Romanian 446 (models)	41A5276	1
Romanian 96 (models)	41A5275	1
Russian/Cyrillic (models)	41A5277	1
Serbian/Cyrillic (models)	41A5278	1
Slovak (models)	41A5279	1
Spanish (models)	41A5280	1
Swedish/Finn (models)	41A5281	1
Swiss, F/G (models)	41A5282	1
Thailand (models)	41A5283	1
Turkish 179 (models)	41A5284	1
Turkish 440 (models)	41A5285	1
UK (models)	41A5286	1
US European (models)	41A5287	1
Slovenian (models)	41A5288	1

6397 mice	FRU#	CRU
Optical wheel mouse (400DPI, USB) (models 11U 11F 11S 11L 11D 11Y 11G 11M 11A 11Q 11T 11C 11B 11H 11V 11K 11R 11E 11J)	41U3013	1
Optical wheel mouse (400DPI, USB) (models 11U 11F 11S 11L 11D 11Y 11G 11M 11A 11Q 11T 11C 11B 11H 11V 11K 11R 11E 11J)	41U3030	1
Scroll point optical mouse (800DPI, USB) (models)	41U3019	1

6397 Adapters and miscellaneous FRUs	FRU#	CRU
Modem daughter card (MDC 1.5) kit (models)	39T0495	2
Modem daughter card (MDC 1.5) kit internal cable/RJ11 (models)	41R8522	2
Lenovo branded speakers - 2 piece--primary (models)	41A5331	1
Lenovo branded speakers - 2 piece--secondary (models)	41A5334	1
Speaker power brick (models)	89P8571	1
Thermal grease syringe (models)	91P8835	N
Vertical PC stand (VPC) for blue 4.5L chassis (models)	41R4770	2

6397 Power Cords	FRU#	CRU
Power cord - US/Canada (models 11U 11F 11S 11D 11L 11A 11T)	42T5004	1
Power cord - Japan (models 11J)	42T5011	1
Power cord - Argentina (models 11Y 11L)	42T5017	1
Power cord - Brazil (models)	42T5174	1
Power cord - Europe (Germany) (models 11A)	42T5029	1
Power cord - UK (models 11G 11A)	42T5035	1
Power cord - Denmark (models 11G)	42T5041	1
Power cord - Switzerland (models 11G)	42T5044	1
Power cord - Italy (models 11S 11Y 11L 11G)	42T5047	1
Power cord - Australia / New Zealand (models 11M)	42T5050	1
Power cord - South Africa (models 11M)	42T5056	1
Power cord - Israel (models 11G)	42T5062	1
Power cord - China (PRC) (models 11C)	42T5065	1
Power cord - Taiwan (models 11V)	42T5071	1
Power cord - Korea (models 11K)	42T5077	1
Power cord - India (models 11Q)	42T5083	1
Power cord - Thailand (models)	42T4406	1
Power cord - US/Canada--optional second source (models 11U 11F 11S 11D 11L 11A 11T)	42T5089	1
Power cord - Japan-optional second source (models 11J)	42T5096	1
Power cord - Argentina - optional second source (models 11Y 11L)	42T5102	1
Power cord - Brazil (new type) - optional second source (models)	42T5177	1
Power cord - Europe (Germany) - optional second source (models 11A)	42T5114	1
Power cord - UK - optional second source (models 11G 11A)	42T5120	1
Power cord - Denmark - optional second source (models 11G)	42T5126	1
Power cord - Switzerland - optional second source (models 11G)	42T5129	1
Power cord - Italy - optional second source (models 11S 11Y 11L 11G)	42T5132	1
Power cord - Australia/New Zealand - optional second source (models 11M)	42T5135	1
Power cord - South Africa - optional second source (models 11M)	42T5141	1
Power cord - Israel - optional second source (models 11G)	42T5147	1
Power cord - China (PRC) - optional second source (models 11C)	42T5150	1
Power cord - Taiwan-optional second source (models 11V)	42T5156	1
Power cord - Korea-optional second source (models 11K)	42T5162	1
Power cord - India-optional second source (models 11Q)	42T5168	1
Power cord - Thailand-optional second source (models)	42T4400	1

6397 Windows XP Home Recovery CDs	FRU#	CRU
US/UK/AP/TH (models)	45R6005	1
FR/CF (models)	45R6006	1
GR (models)	45R6007	1

6397 Windows XP Home Recovery CDs	FRU#	CRU
IT (models)	45R6010	1
BR (models)	45R6009	1
SP/LA (models)	45R6008	1
DK (models)	45R6014	1
NL (models)	45R6015	1
AE (models)	45R6020	1
SV (models)	45R6013	1
HE (models)	45R6018	1
FI (models)	45R6017	1
NO (models)	45R6012	1
PL (models)	45R6019	1
PO (models)	45R6030	1
RU (models)	45R6021	1
RE (models)	45R6029	1
HU (models)	45R6023	1
CZ (models)	45R6016	1
TR (models)	45R6022	1
GK (models)	45R6024	1
Japanese (models)	45R6011	1
Simplified Chinese (models)	45R6025	1
Taiwan-TC (models)	45R6026	1
Hong Kong-TC (models)	45R6027	1
Korea (models)	45R6028	1

6397 Windows XP Pro Recovery CDs	FRU#	CRU
US/UK/AP/TH (models)	45R5979	1
FR/CF (models)	45R5980	1
GR (models)	45R5981	1
IT (models)	45R5984	1
BR (models)	45R5983	1
SP/LA (models)	45R5982	1
DK (models)	45R5988	1
NL (models)	45R5989	1
AE (models)	45R5994	1
SV (Swedish) (models)	45R5987	1
HE (models)	45R5992	1
FI (models)	45R5991	1
NO (models)	45R5986	1
PL (models)	45R5993	1

6397 Windows XP Pro Recovery CDs	FRU#	CRU
PO (models)	45R6004	1
RU (models)	45R5995	1
RE (models)	45R6003	1
HU (models)	45R5997	1
CZ (models)	45R5990	1
TR (models)	45R5996	1
GK (models)	45R5998	1
Japanese (models)	45R5985	1
Simplified Chinese (models)	45R5999	1
Taiwan-TC (models)	45R6000	1
Hong Kong-TC (models)	45R6001	1
Korea (models)	45R6002	1
Multilingual 1 XP-P -- EN, NL, FR, GR, IT (models)	45R5977	1
Multilingual 2 XP-P -- EN, DK, FI, NO, SV (models)	45R5978	1

6397 Vista Home Basic 32 Recovery DVDs	FRU#	CRU
English (models 13H)	46R7098	1
Russian English (models)	46R7099	1
French (models)	46R7100	1
German (models)	46R7101	1
Spanish (models)	46R7102	1
Brazilian (models)	46R7103	1
Italian (models)	46R7104	1
Japanese (models)	46R7105	1
Norwegian (models)	46R7106	1
Swedish (models)	46R1086	1
Danish (models)	46R7107	1
Dutch (models)	46R1088	1
Czech (models)	46R1089	1
Finnish (models)	46R1090	1
Polish (models)	46R1091	1
Russian (models)	46R7108	1
Turkish (models)	46R1093	1
Hungarian (models)	46R1094	1
Greek (models)	46R1095	1
Simplified Chinese (models)	46R7109	1
Taiwan (models)	46R7110	1
Hong Kong (models)	46R7111	1
Korea (models)	46R1099	1

6397 Vista Home Basic 32 Recovery DVDs	FRU#	CRU
Slovenian (models)	46R1100	1
Hebrew (models)	46R1101	1
Portuguese (models)	46R1102	1
Arabic Localized (models)	46R1103	1
Slovakia (models)	46R1104	1

6397 Vista Business 32 Recovery DVDs	FRU#	CRU
English (models 15Q)	46R7070	1
Russian (models)	46R7071	1
French (models)	46R7072	1
German (models)	46R7073	1
Spanish (models 15S 15D 15Y 17S 17Y 18S 18Y)	46R7074	1
Brazilian (models)	46R7075	1
Italian (models)	46R7076	1
Japanese (models)	46R7077	1
Norwegian (models)	46R7078	1
Swedish (models)	46R1028	1
Danish (models)	46R7079	1
Dutch (models)	46R1030	1
Czech (models)	46R1031	1
Finnish (models)	46R1032	1
Polish (models)	46R1033	1
Russian (models)	46R7080	1
Turkish (models)	46R1035	1
Hungarian (models)	46R1036	1
Greek (models)	46R1037	1
Simplified Chinese (models 15C)	46R7081	1
Traditional Chinese (models)	46R7082	1
Traditional Chinese (models)	46R7083	1
Korean (models)	46R1041	1
Slovenian (models)	46R1042	1
Romanian (models)	46R1043	1
Portuguese (models)	46R1044	1
Serbian - Latin (models)	46R1045	1
Slovakian (models)	46R1046	1
Arabic Localized (models)	46R1047	1
Hebrew (models)	46R1048	1

6397 Vista Ultimate 32 Recovery DVDs	FRU#	CRU
English (models)	46R7112	1
Russian (models)	46R7113	1
French (models)	46R7114	1
German (models)	46R7115	1
Spanish (models)	46R7116	1
Brazilian (models)	46R7117	1
Italian (models)	46R7118	1
Japanese (models)	46R7119	1
Norwegian (models)	46R7120	1
Swedish (models)	46R1114	1
Danish (models)	46R7121	1
Dutch (models)	46R1116	1
Czech (models)	46R1117	1
Finnish (models)	46R1118	1
Polish (models)	46R1119	1
Russian (models)	46R7122	1
Turkish (models)	46R1121	1
Hungarian (models)	46R1122	1
Greek (models)	46R1123	1
Simplified Chinese (models)	46R7123	1
Traditional Chinese (models)	46R7124	1
Traditional Chinese (models)	46R7125	1
Korean (models)	46R1127	1
Slovenian (models)	46R1128	1
Hebrew (models)	46R1129	1
Portuguese (models)	46R1130	1
Slovakian (models)	46R1131	1
Arabic Localized (models)	46R1132	1

6397 Vista Business 64 Recovery DVDs	FRU#	CRU
English (models)	46R7084	1
Russian English (models)	46R7085	1
French (models)	46R7086	1
German (models)	46R7087	1
Spanish (models)	46R7088	1
Brazilian (models)	46R7089	1
Italian (models)	46R7090	1
Japanese (models)	46R7091	1
Norwegian (models)	46R7092	1

6397 Vista Business 64 Recovery DVDs	FRU#	CRU
Swedish (models)	46R1058	1
Danish (models)	46R7093	1
Dutch (models)	46R1060	1
Czech (models)	46R1061	1
Finnish (models)	46R1062	1
Polish (models)	46R1063	1
Russian (models)	46R7094	1
Turkish (models)	46R1065	1
Hungarian (models)	46R1066	1
Greek (models)	46R1067	1
Simplified Chinese (models)	46R7095	1
Taiwan (models)	46R7096	1
Hong Kong (models)	46R7097	1
Korea (models)	46R1071	1
Slovenian (models)	46R1072	1
Arabic Localized (models)	46R1073	1
Hebrew (models)	46R1074	1
Portuguese (models)	46R1075	1
Slovakian (models)	46R1076	1

Chapter 10. Additional Service Information

This chapter provides additional information that the service representative might find helpful.

Security features

Security features in this section include the following:

- Passwords
- Vital Product Data
- Management Information Format (MIF)

Hardware controlled Passwords

Hardware controlled passwords are set using the Setup Utility program. For more information about passwords, see “Using passwords” on page 39.

Operating system password

An operating system password is very similar to a power-on password and denies access to the computer by an unauthorized user when the password is activated. The computer is unusable until the password is entered and recognized by the computer.

Vital product data

Each computer has a unique Vital Product Data (VPD) code stored in the nonvolatile memory on the system board. After you replace the system board, the VPD must be updated. To update the VPD, see “Updating (flashing) BIOS from a CD-ROM or diskette” on page 139.

BIOS levels

An incorrect level of BIOS can cause false errors and unnecessary FRU replacement. Use the following information to determine the current level of BIOS installed in the computer, the latest BIOS available for the computer, and where to obtain the latest level of BIOS.

- To determine the current Level of BIOS:
  - Start the Setup Utility.
  - Select System Information on the Main setup screen.
- Sources for obtaining the latest level BIOS available
  1. Lenovo support web site: `http://www.lenovo.com/support/`
  2. Lenovo Customer Support Center
  3. Levels 1 and 2 Support

To update (flash) the BIOS, see “Updating (flashing) BIOS from a CD-ROM or diskette” on page 139.

Updating (flashing) BIOS from a CD-ROM or diskette

This section describes how to update (flash) the BIOS using a CD-ROM or diskette. system program updates are available athttp://www.lenovo.com/support on the World Wide Web.

1. To update (flash) the BIOS:

© Copyright Lenovo 2005, 2010

- If using a CD-ROM, make sure the computer is turned on. Insert the system program update (flash) CD-ROM into the optical drive. The update begins.
- If using a diskette, make sure the computer is turned off. Insert the system program update (flash) diskette and turn on the computer. The update begins.

2. When you are prompted to select a language, press the number on your keyboard that corresponds to the language and then press **Enter**.
3. When prompted to change the serial number, press **Y**.
4. Type the seven-character serial number of your computer and then press **Enter**.
5. When prompted to change the machine type/model, press **Y**.
6. Type the seven-character machine type/model of your computer and then press **Enter**.
7. Follow the instructions on the screen to complete the update.

Recovering from a POST/BIOS update failure

Attention

If an interruption occurs during a POST/BIOS update (flash update), the computer might not restart correctly. If this occurs, perform the following procedure commonly called Boot-block Recovery.

Note: If your computer has no internal diskette drive, an optional USB diskette drive must be connected to use the BIOS flash diskette.

1. Turn off the computer and any attached devices, such as printers, monitors, and external drives.
2. Unplug all power cords from electrical outlets, and open the computer cover. See “Opening the cover” on page 68.
3. Locate the Clear CMOS/Recovery jumper on the system board. See “System board locations” on page 68.
4. Remove any cables that impede access to the Clear CMOS/Recovery jumper.
5. Move the jumper from the standard position (pins 1 and 2) to pins 2 and 3.
6. Insert the POST/BIOS update (flash) diskette in the diskette drive.
7. Close the computer cover and reconnect any cables that were disconnected.
8. Reconnect the power cords for the computer and monitor to electrical outlets.
9. Turn on the computer and the monitor.
10. The recovery session will take two to three minutes. During this time, you will hear a series of beeps. After the update session is completed, the series of beeps ends. There will be no video, and the system will automatically turn off.
11. Open the computer cover, and move the Clear CMOS/Recovery jumper back to the original positions (pins 1 and 2).
12. Remove the POST/BIOS flash diskette from the diskette drive.
13. Close the computer cover and reconnect any cables that were disconnected.
14. Turn on the computer to restart the operating system.

Power management

Power management reduces the power consumption of certain components of the computer such as the system power supply, processor, hard disk drives, and some monitors.

Automatic configuration and power interface (ACPI) BIOS

Being an ACPI BIOS system, the operating system is allowed to control the power management features of the computer and the setting for Advanced Power Management (APM) BIOS mode is ignored. Not all operating systems support ACPI BIOS mode.

Automatic Power-On features

The Automatic Power-On features within the Power Management menu allow you to enable and disable features that turn on the computer automatically.

- **RTC resume**: You can specify a date and time at which the computer will be turned on automatically. This can be either a single event or a daily event.
- **Wake on LAN**: If the computer has a properly configured token-ring or Ethernet LAN adapter card that is Wake on LAN-enabled and there is remote network management software, you can use the Wake on LAN feature. When you set Wake on LAN to **Enabled**, the computer will turn on when it receives a specific signal from another computer on the local area network (LAN).

Appendix A. Notices

Lenovo may not offer the products, services, or features discussed in this document in all countries. Consult your local Lenovo representative for information on the products and services currently available in your area. Any reference to a Lenovo product, program, or service is not intended to state or imply that only that Lenovo product, program, or service may be used. Any functionally equivalent product, program, or service that does not infringe any Lenovo intellectual property right may be used instead. However, it is the user's responsibility to evaluate and verify the operation of any other product, program, or service.

Lenovo may have patents or pending patent applications covering subject matter described in this document. The furnishing of this document does not give you any license to these patents. You can send license inquiries, in writing, to:

Lenovo (United States), Inc.
1009 Think Place - Building One
Morrisville, NC 27560
U.S.A.
Attention: Lenovo Director of Licensing

LENOVO PROVIDES THIS PUBLICATION “AS IS” WITHOUT WARRANTY OF ANY KIND, EITHER EXPRESS OR IMPLIED, INCLUDING, BUT NOT LIMITED TO, THE IMPLIED WARRANTIES OF NON-INFRINGEMENT, MERCHANTABILITY OR FITNESS FOR A PARTICULAR PURPOSE. Some jurisdictions do not allow disclaimer of express or implied warranties in certain transactions, therefore, this statement may not apply to you.

This information could include technical inaccuracies or typographical errors. Changes are periodically made to the information herein; these changes will be incorporated in new editions of the publication. Lenovo may make improvements and/or changes in the product(s) and/or the program(s) described in this publication at any time without notice.

The products described in this document are not intended for use in implantation or other life support applications where malfunction may result in injury or death to persons. The information contained in this document does not affect or change Lenovo product specifications or warranties. Nothing in this document shall operate as an express or implied license or indemnity under the intellectual property rights of Lenovo or third parties. All information contained in this document was obtained in specific environments and is presented as an illustration. The result obtained in other operating environments may vary.

Lenovo may use or distribute any of the information you supply in any way it believes appropriate without incurring any obligation to you.

Any references in this publication to non-Lenovo Web sites are provided for convenience only and do not in any manner serve as an endorsement of those Web sites. The materials at those Web sites are not part of the materials for this Lenovo product, and use of those Web sites is at your own risk.

Any performance data contained herein was determined in a controlled environment. Therefore, the result obtained in other operating environments may vary significantly. Some measurements may have been made on development-level systems and there is no guarantee that these measurements will be the same on generally available systems. Furthermore, some measurements may have been estimated through extrapolation. Actual results may vary. Users of this document should verify the applicable data for their specific environment.

© Copyright Lenovo 2005, 2010

Television output notice

The following notice applies to models that have the factory-installed television-output feature.

This product incorporates copyright protection technology that is protected by method claims of certain U.S. patents and other intellectual property rights owned by Macrovision Corporation and other rights owners. Use of this copyright protection technology must be authorized by Macrovision Corporation, and is intended for home and other limited viewing uses only unless otherwise authorized by Macrovision Corporation. Reverse engineering or disassembly is prohibited.

Trademarks

The following terms are trademarks of Lenovo in the United States, other countries, or both:

Lenovo
ThinkCentre
Rescue and Recovery

The following terms are trademarks of International Business Machines Corporation in the United States, other countries, or both:

IBM (used under license)
Wake on LAN

Intel, Core, and Pentium are trademarks of Intel Corporation in the United States, other countries, or both.

Microsoft, Windows, and Windows Vista are trademarks of the Microsoft group of companies.

Other company, product, or service names may be trademarks or service marks of others.

Part Number: 43C6257

Printed in USA

(1P) P/N: 43C6257

Free Manuals Download Website

http://myh66.com

http://usermanuals.us

http://www.somanuals.com

http://www.4manuals.cc

http://www.manual-lib.com

http://www.404manual.com

http://www.luxmanual.com

http://aubethermostatmanual.com

Golf course search by state

http://golfingnear.com

Email search by domain

http://emailbydomain.com

Auto manuals search

http://auto.somanuals.com

TV manuals search

http://tv.somanuals.com