TOSHIBA

MULTIFUNCTIONAL DIGITAL SYSTEMS

Operator's Manual for Basic Function

e-STUDIO230/280

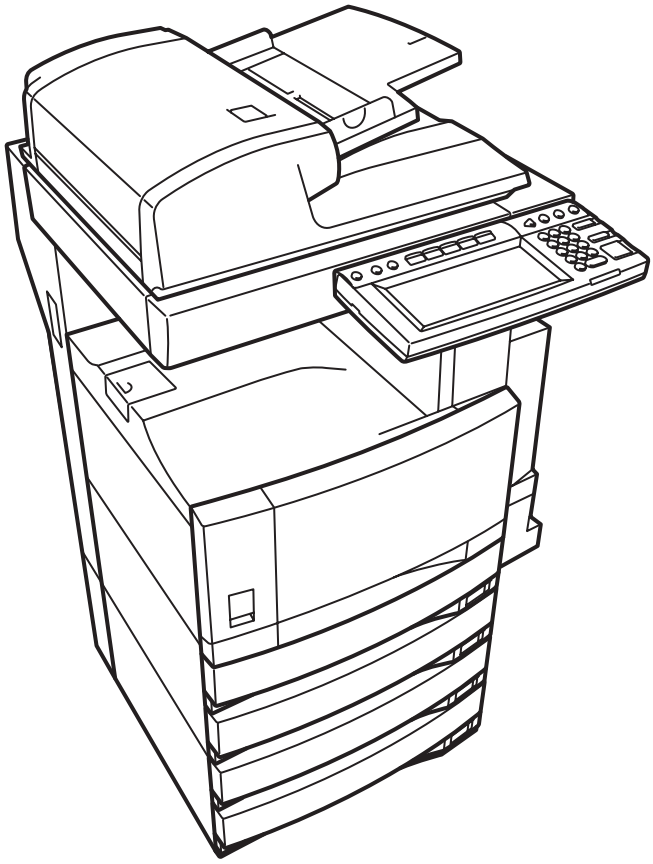

EPA ENERGY STAR ® (MFD)

The United States Environmental Protection Agency (EPA) has introduced a voluntary programme, the ENERGY STAR programme, to encourage the widespread and voluntary use of energy-efficient technologies that enhance the workplace, improve product performance and prevent pollution. As an ENERGY STAR Partner, the TOSHIBA TEC CORPORATION has determined that this copier model meets the ENERGY STAR guidelines for energy efficiency.

ENERGY STAR guidelines for this class of copier require ENERGY STAR copiers to have a 'Sleep Mode' feature that automatically makes the copier enter the sleep mode after a period of inactivity. The copier must also automatically change to a 'Low Power Mode' (Automatic Energy Save) after a period of time since the last usage. Specifically, this copier complies with the following requirements.

◇ **e-STUDIO230/280 Copier model (Base model)**

'Automatic Energy Save'-

The copier consumes less than 93.55 watts (e-STUDIO230)/112.8 watts (e-STUDIO280) during Energy Save.

'Automatic Energy Save' Default Time-

The default time for the 'Automatic Energy Save' is 15 minutes.

'Sleep Mode'

The copier consumes less than 15 watts in the 'Sleep Mode'.

'Sleep Mode' Default Time-

The default time for the 'Sleep Mode' is 40 minutes.

◇ **e-STUDIO230/280 Copier/Printer + Fax model (Multifunction model)**

'Automatic Energy Save'-

The copier consumes less than 138.55 watts (e-STUDIO230)/157.80 watts (e-STUDIO280) during Energy Save.

'Automatic Energy Save' Default Time-

The default time for the 'Automatic Energy Save' is 15 minutes.

'Sleep Mode'

The copier consumes less than 80 watts in the 'Sleep Mode'.

'Sleep Mode' Default Time-

The default time for the 'Sleep Mode' is 40 minutes.

Note1- The default setting for the 'Sleep Mode' and 'Automatic Energy Save' can be changed.

Note2- For Multifunction model, if the Fax or printer data is received in the sleep mode, the copier starts warming itself up and prints out the data when it becomes ready. Also, when the start button or the energy saver button on the control panel is pressed, the copier starts warming itself up.

Note3- If 'Automatic Energy Save' and 'Sleep Mode' have the same setting time, 'Sleep Mode' takes priority.

In accordance with EPA ENERGY STAR programme guidelines, Toshiba recommends the following recycled paper.

Great White MultiUse 20 paper

Great White MultiUse 24 paper

If you have any questions regarding the use of recycled paper or some recommended types of recycled paper, please contact your authorized Toshiba dealer.

ENERGY STAR is a U.S. registered mark.

TABLE OF CONTENTS

NOTICE TO USERS 5
TOSHIBA QUALITY IS SECOND TO NONE 6
PREFACE 8
FEATURES OF THE e-STUDIO230/280 9
GENERAL PRECAUTIONS 10
When Installing or Moving 10
- When Using the Multifunctional Digital Systems 13
- During Maintenance or Inspection 15
- When Handling Supplies 16

DISCLAIMER NOTICE 17

1. BEFORE USING EQUIPMENT 19
1. DESCRIPTION OF EACH COMPONENT 20
   - Main Components 20
   - Optional Equipment 21
   - Control Panel 23
   - Adjustment of the Angle of the Control Panel 25
   - Touch Panel 27
2. TURNING ON THE POWER SWITCH 31
   - Turning on/off the Power 31
   - Controlling the Use of the Copier with Department Codes 33
3. SWITCHING TO THE ENERGY-SAVING MODE 34
4. SETTING COPY PAPER 35
   - Acceptable Copy Paper Types and Sizes 35
   - Toshiba-Recommended Paper/Handling and Storing Paper 37
   - Changing the Paper Size of the Drawer/Setting the Drawer for Special Uses 38

2. HOW TO MAKE COPIES 47
1. GENERAL COPYING PROCEDURES 48
2. SETTING ORIGINALS 51
   - Acceptable Original Types and Sizes/Maximum Number of Sheets that can be Stored 51
   - When Placing an Original on the Glass 52
   - When Using the Reversing Automatic Document Feeder (optional) 54
3. AUTO JOB START (JOB PRESET) 57
4. INTERRUPT COPYING 59
5. STOPPING THE COPY OPERATION 60
6. BYPASS COPYING 61
   - Bypass Copying 61
   - Bypass Copying on Standard Size Paper 62
   - Bypass Copying on Non-Standard-Size Paper 65
   - Storing a Non-Standard Size in MEMORY 67
   - Before copying on an envelope 68
   - Copying on an envelope 69

3. SETTING OF BASIC COPY MODES 73
1. PAPER SELECTION 74
   - Automatic Paper Selection (APS) 74
   - Manual Paper Selection 76
   - Setting the [OTHER SIZE] button 77
   - Setting the [MIXED ORIGINAL SIZE] 78
2. REDUCTION AND ENLARGEMENT COPYING 80
3. SELECTING FINISHING MODES 84
   - Finishing Modes and Finishers (Optional) 84

- Sort/Group Copying 87
- Rotate Sort Mode 88
- Staple Sorting 89
- Magazine Sort & Saddle Stitch Mode (Booklet Mode) 91
- Hole Punch Mode (Optional) 94

4. DUPLEX COPYING 96
   - For Making 1-sided, 2-sided and Book-type Copies 96
5. ORIGINAL MODE 102
6. COPY DENSITY ADJUSTMENT 103

4. IMAGE EDITING AND IMAGE ADJUSTMENT 105

1. BACKGROUND ADJUSTMENT 106
2. SHARPNESS ADJUSTMENT 107

5. USING THE EDITING FUNCTIONS 109

1. IMAGE SHIFT 110
2. EDGE ERASE 113
3. BOOK CENTRE ERASE 114
4. DUAL-PAGE 115
5. 2 IN 1/4 IN 1 117
6. MAGAZINE SORT (FROM THE EDITING MENU) 119
7. IMAGE EDITING 121
   - Trimming/Masking 121
   - Mirror Image 123
   - Negative/Positive Reversal 124
8. X-Y ZOOM 125
9. COVER COPYING 126
10. SHEET INSERTION MODE 129
11. TIME & DATE STAMP 131
12. PAGE NUMBERING 132
13. JOB BUILD 134
14. DIRECTION OF COPY IMAGES IN “1 TO 2” AND “2 TO 1” 138
15. DIRECTION OF DUPLEX COPY IMAGES IN “2 TO 2” 140
16. CONTINUOUS/SINGLE ORIGINAL FEEDING 141

6. STORING ORIGINALS 143

1. STORE TO e-FILING 144
2. COPY & FILE 147

7. SCANNING THE IMAGES 151

1. SCAN SETTING IN THE TOUCH PANEL 152
2. SCAN TO e-FILING 154
3. SCAN TO FILE 158
4. SCAN TO E-MAIL 162

8. INTERNET FAX 167

1. INTERNET FAX 168
2. SENDING INTERNET FAX 170
   - Setting the Transmission Conditions 170
   - Specifying the Recipients 173
   - Advanced Function 184
3. RECEIVING INTERNET FAX 187

9. JOB STATUS 189

1. JOB STATUS 190

2. PRINT JOB LIST....191
3. PROOF PRINT JOB....194
4. PRIVATE PRINT JOB....196
5. WHEN USING THE DEPARTMENT CODES....198
6. CONFIRMING THE STATUS OF FAX/INTERNET FAX JOB....200
7. CONFIRMING THE STATUS OF SCAN....201
8. LOG LIST....202
9. ADDRESS REGISTRATION FROM LOG LISTS....205
10. PRINTING SEND/RECEIVE LOG LIST OF FAX....207
11. STATUS....208
12. ERROR CODE....210

10.e-FILING....221
1. e-FILING FUNCTIONS....222
2. SETTING UP BOX....224
3. CHANGING INPUT DATA....226
4. DELETING BOX....228
5. PRINTING STORED DOCUMENT....229

11.TEMPLATE....233
1. TEMPLATE....234
2. RECALLING TEMPLATE....235
3. REGISTERING TEMPLATE....238
4. CHANGING INPUT DATA....243
5. DELETING TEMPLATE....247

12.WHEN THE GRAPHIC SYMBOLS BLINK ON THE TOUCH PANEL....251
1. DESCRIPTION OF THE BLINKING GRAPHIC SYMBOLS....252
2. REPLACE TONER CARTRIDGE SYMBOL....254
3. CLEAR PAPER SYMBOL....259
4. ADDING STAPLES (OPTIONAL)....274
5. REMOVING JAMMED STAPLES (OPTIONAL)....279
6. DISPOSING OF THE PUNCHED PAPER BITS (OPTIONAL)....283
7. CALL SERVICE SYMBOL/PERIODIC MAINTENANCE MESSAGE....284

13.MAINTENANCE....285
1. DAILY INSPECTION....286
2. SIMPLE TROUBLESHOOTING....288

14.SPECIFICATIONS & OPTIONS....293
1. e-STUDIO230/280 SPECIFICATIONS....294
2. SPECIFICATIONS OF OPTIONS....297
3. PACKING LIST....303
4. COPYING FUNCTION COMBINATION MATRIX....304
   - Combination Matrix 1/2....304
   - Combination Matrix 2/2....305

NOTICE TO USERS

Warning:
This is a Class A product. In a domestic environment this product may cause radio interference in which case the user may be required to take adequate measures.

1 Do not touch the connector terminal when disconnecting the cables of peripheral equipment.
2 Before opening any covers or removing any parts from the copier, discharge the static electricity from your body by touching a metal part of the copier. This product is carrying the CE-Mark in accordance with the related European Directives. Responsible for CE-marking is TOSHIBA TEC GERMANY IMAGING SYSTEMS GmbH, Carl-Schurz-Str. 7, 41460 Neuss, Germany.
E-mail: customerservice@toshibatec-tgis.com

Machine Noise Information
Ordinance3. GSGV, January 18, 1991: The maximum sound pressure level is equal to or less than 70dB(A) according to EN27779.

After a suitable place has been selected for the installation of the e-STUDIO, please do not change it. Avoid excessive heat, dust, vibration and direct sunlight. Also, provide proper ventilation as the copier emits a small amount of ozone.

TOSHIBA QUALITY IS SECOND TO NONE

e-STUDIO230/280 Toner Cartridges.
It is recommended that genuine TOSHIBA supplies and parts be used to obtain optimum results.

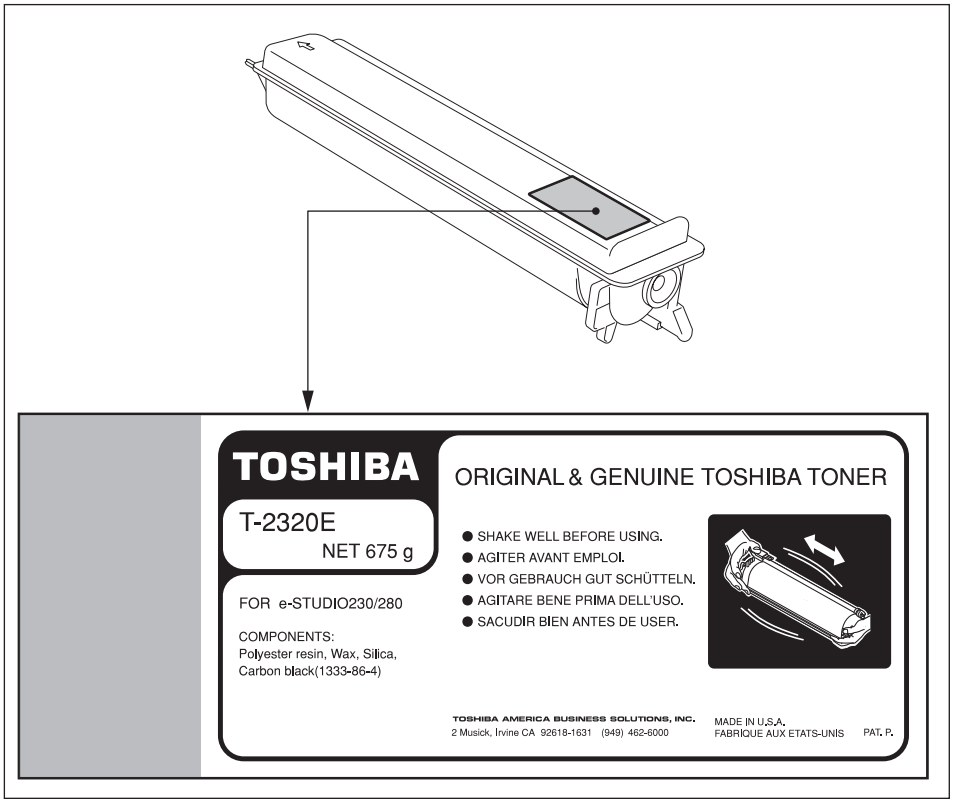

Supplies/Parts

- **Dependability**

  Genuine Toshiba supplies are subjected to the strictest of inspections so that every supply you receive will perform at optimal levels.
- **High Productivity**

  Genuine Toshiba supplies are created to meet the demands of our competitive world and provide high-speed reliable trouble-free copies when you need them.
- **Stable Image Quality**

  Genuine Toshiba supplies are designed to provide consistently stable image output.
- **Copier Kind**

  Genuine Toshiba supplies are designed to keep the copier and all its parts in trouble-free working order. Reduction of machine wear is due to Toshiba's intimate knowledge of the copier's characteristics ensuring the highest standard of care.
- **Machine Balance**

  From the beginning Toshiba supplies and machines were made for each other. Whenever Toshiba designs a new machine, it also designs a new toner that is made just for that machine. By using Genuine Toshiba supplies with Toshiba copiers, you are guaranteed optimum performance.

Toner

- **Optimum image Quality**

  Toshiba toner is manufactured using ultra-fine quality materials under precisely controlled conditions to ensure that your Toshiba copiers will continually generate sharp high-quality images.
- **Cost Advantage**

  Genuine Toshiba toner provides value. Only the proper amount of toner is used during the reproduction process thereby enabling the machine to continue to operate until all the toner has been used. In this way you get the full value from each cartridge used.
- **Environmental Harmony**

  Genuine Toshiba toner is manufactured with the environment in mind. To care for Mother Earth, we use embossed or plastic labels making our toner fully recyclable. In addition, harmful dust and ozone levels have been reduced to improve the working environment.
- **User Friendly**

  Genuine Toshiba toner is people-friendly. Before approving our toners for sale, we test them to be sure that they pass the strictest of health standards. This takes the worry out of handling the toner.

General

- **ISO 9000 and ISO 14000**

  Toshiba TEC toner plants are ISO 9001 and ISO 14001 certified. Our toners are of the highest quality and are environmental friendly.
- **Service and Support Benefits**

  Toshiba's Service engineers are certified to keep your copier performing at optimum levels.To ensure continuous image quality, utilize an authorized Toshiba Service provider to care for and perform periodical maintenance on your copier.

PREFACE

Thank you for purchasing the Toshiba Multifunctional Digital Systems e-STUDIO230/280. This Operator's Manual describes the following:

- How to use the Multifunctional Digital Systems.
- How to inspect and carry out maintenance on the Multifunctional Digital Systems.
- How to remedy mechanical and copying problems.

Before using the Multifunctional Digital Systems, thoroughly read and understand this Operator's Manual. To ensure that clean copies are made at all times and to keep your Multifunctional Digital Systems in optimum working order, this Operator's Manual should be readily available for future reference.

To ensure correct and safe use of the Toshiba Multifunctional Digital Systems e-STUDIO230/280, this Operator's Manual describes safety precautions according to the following three levels of warning:

Before reading this Operator's Manual, you should fully understand the meaning and importance of these signal words.

- **Warning**
  Indicates a potentially hazardous situation which, if not avoided, could result in death, serious injury, or serious damage, or fire in the equipment or surrounding assets.
- **Caution**
  Indicates a potentially hazardous situation which, if not avoided, may result in minor or moderate injury, partial damage of the equipment or surrounding assets, or loss of data.
- **Note**
  Indicates a procedure you should follow to ensure the optimal performance of the Multifunctional Digital Systems and problem-free copying.

- **Tip**
  Describes handy information that is useful to know when operating the Multifunctional Digital Systems.
- **Advice**
  Describes an operation you should follow to keep the Multifunctional Digital Systems in good working order.

FEATURES OF THE e-STUDIO230/280

The e-STUDIO230/280 is a Multifunctional Digital Systems that is capable of using each function via networks. The e-STUDIO230/280 also has various optional paper handling devices to meet the needs of your office.
The e-STUDIO230/280 offers the following convenient features, functions and options.

- The copying speed is 23 copies (A4) per minute for e-STUDIO230, 28 copies (A4) per minute for the e-STUDIO280.
- Considering eco-friendliness and energy saving, the used toner free recycle system is adopted, warm-up time is shortened to approximately 25 seconds and the ozone generation amount in the equipment is reduced by 75% compared with current models.
- Improving the scanning speed allows you to scan, fax and copy with ease.
  You can also make duplex copies at the equivalent speed.
- An all-in-one controller is installed to perform the effective network functions.
  (To use the print, scan and Internet Fax functions, optional printer kit, scanner upgrade kit, printer/scanner kit, etc. are required.)
- The input/output interface is designed for internet connection (access) environment.
- A 1/2 VGA wide panel improves operability and efficiency.
- A universal design is adopted for the control panel whose angle can be changed.
- The e-Filing function allows you to scan, save, reuse, and re-edit the original data via client PCs from the scanning section.
- Received Fax documents can be stored in the e-Filing without printing them.
  (Optional FAX board is required.)
- Scanned originals can be sent via Fax and E-mail simultaneously.
  (To send them via Fax, optional FAX board is required. To send them vial E-mail, optional printer/scanner kit or both printer kit and scanner kit is required.)
- Electric sorting improves copying productivity.
- Comes with rich editing functions such as trimming, masking and mirror.
- Loading the page memory and hard disc as standard equipment enables 2 in 1/4 in 1, Electronic sorting and magazine sorting, etc.
- The job build function enables the copying and storing collectively of up to 1,000 original pages by scanning each page with the optimum original mode or image adjustment and setting the desired finishing mode.
- A fixing system that uses less oil reduces the amount of oil affixed to the paper.
- By simply replacing the cartridge, you can add toner without dirtying your hands.
- A wide variety of media from thick paper (up to 209 g/m^2), sticker labels, OHP films, etc. is acceptable.
- Printing and copying on envelopes are also possible.
- Installing an optional finisher offers quick automatic sorting, stapling and hole punching (optional) of copies.
- Installing a finisher with an optional saddle stitching function attached allows you to select the saddle stitching mode which will automatically staple the centre of the documents just like a book.
- When the optional printer/scanner kit, both printer kit and scanner upgrade kit, or Fax board is installed, the machine will enter a Sleep mode and will re-activate when a job is received.

When Installing or Moving

Warning

- This multifunctional digital systems requires 220-240 V AC, 8 A 50/60 Hz electric power. For Saudi Arabia 100V version, it requires 100-127 V AC, 12 A 50/60 Hz electric power.
  DO NOT use a power supply with a voltage other than that specified.
  Avoid multiple connections in the same outlet. This could cause a fire or give you an electric shock. If you are considering increasing the number of outlets, contact an electrician.
- ALWAYS connect this multifunctional digital systems to an outlet with a ground connection to avoid the danger of fire or electric shock in case of short-circuiting. Contact your service representative for the details. Be sure to use a 3-conductor, grounded wall outlet.
  In areas where a 2-pin plug is used, the multifunctional digital systems must be grounded for safety. Never ground it to a gas pipe, a water pipe, or any other object not suitable for grounding.
- Plug the power cord securely into the outlet. If it is not plugged in properly, it could heat up and cause a fire or give you an electric shock.
- DO NOT damage, break or attempt to repair the power cord.
  The following things should not be done to the power cord.
  - Twisting it - Bending it - Pulling it
  - Placing anything on it - Making it hot - Situating it near radiators or other heat sources
  This could cause a fire or give you an electric shock. If the power cord is damaged, contact your service representative.
- When removing the plug from the outlet, DO NOT PULL the power cord. ALWAYS hold the plug when removing it from the outlet. If the power cord is pulled, the wires may become broken and this could cause a fire or give you an electric shock.
- Make sure that the ventilation holes are not blocked up.
  If the temperature within the multifunctional digital systems becomes too high, a fire could result.
- DO NOT move the multifunctional digital systems to another building, up and down the stairs or for any great distance.
  This could cause an injury or give you and electric shock. When lifting or moving the multifunctional digital systems, contact your service representative.
- DO NOT move the multifunctional digital systems with optional equipment, such as the finisher, attached. This could cause a fire or give you an electric shock. When lifting or moving the multifunctional digital systems, contact your service representative.
- When moving the multifunctional digital systems, be sure to shut down the power prior to pulling out the plug from the outlet. If the power cord is damaged, this could cause a fire or give you an electric shock.
- The socket outlet should be near the equipment and be easily accessible.
- Pull out the plug from the outlet more than once a year to clean around the prongs. Accumulating dust and dirt could cause a fire due to the heat released by electric leakage.

Caution

- DO NOT tilt the multifunctional digital systems more than 10 degrees when moving it. If it falls, this could result in personal injury.
- Avoid placing the multifunctional digital systems in a place unsuitable for its weight and also make sure the surface is level.
  Remember that if the multifunctional digital systems falls over, serious injuries could result.
  Weight of the multifunctional digital systems: approx. 75 kg
- There are 4 adjusters (stoppers) on both sides (2 adjusters each) and 2 safety stoppers in front at the bottom of the paper feed pedestal and the large capacity feeder. After moving and installing the equipment, be sure to turn the adjusters clockwise to fix them firmly on the floor as shown in the illustration. Then fix the safety stoppers in the same way.
  If they are not adjusted correctly and the equipment falls, this could result in personal injury
  To move the equipment, turn the safety stoppers and the adjusters anticlockwise.

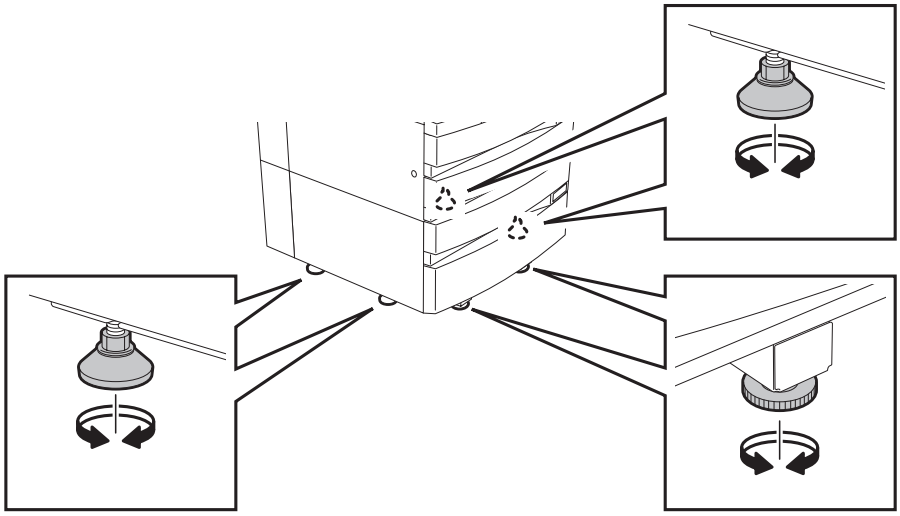

- When connecting the optional equipment and interface cable to the multifunctional digital systems, be sure to turn the power OFF. If the power is not turned off, you could get an electric shock.
  To turn the power OFF, see "Turning off the Power (Shutting down)" 📖 Page 31.

Other Points

- Make sure that there is enough space around the system to facilitate changing of parts and maintenance.
  If there is insufficient space, some operations, such as bypass feeding, will become difficult and the multifunctional digital systems could even break down.
  To insure optimal operation, allow clearances of at least 80 cm on the right, and 10 cm on the left and behind (refer to the illustration below).

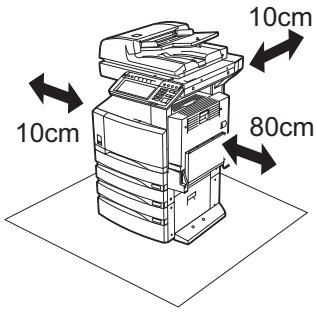

- Adverse environmental conditions may affect the safe operation and performance of the multifunctional digital systems, and the multifunctional digital systems could break down.
  - Avoid locations near windows or with exposure to direct sunlight.
  - Avoid locations with drastic temperature fluctuations.
  - Avoid too much dust.
  - Avoid location that suffer from vibration.
- Allow the air to flow freely and make sure there is a ventilator.
  With inadequate ventilation, the unpleasant odor released by ozone will begin to dominate the atmosphere.

When Using the Multifunctional Digital Systems

Warning

- DO NOT place metallic objects or containers with water (flower vases, coffee cups, etc.) on or near the multifunctional digital systems. And keep paper clips and staples away from the air vent. This could cause a fire or give you an electric shock.
- If the multifunctional digital systems becomes excessively hot, smoke comes out of it or there is an odd smell or noise, proceed as follows.
  Turn the main switch OFF and remove the plug from the outlet, then contact your service representative.
- If the multifunctional digital systems will not be used for more than one month, remove the plug from the outlet for safety purposes during that time.
  This could cause a fire or give you an electric shock if an insulation failure occurs.

Caution

- DO NOT place heavy objects (4 kg or more) on the original glass and do not press on it with force. Breaking the glass could cause personal injury.
- DO NOT place heavy objects (4 kg or more) on the multifunctional digital systems. If the objects fall off, this could cause injury.
- DO NOT remove or connect the plug with wet hands, as this could give you an electric shock.
- DO NOT touch the fuser unit and the metal area around it. Since they are very hot, you could be burned or the shock could cause you to get your hand injured in the machine.
- When changing the angle of the control panel, be careful not to let your hands be caught in the gap between the equipment and the control panel. This could cause personal injury.
- Be careful not to let your fingers be caught when closing the drawer.
  This could injure you.
- Be careful not to let your fingers be caught between the equipment and the finisher (optional).
  This could injure you.
- Be careful not to let your fingers be caught between the equipment and the automatic duplexer.
  This could injure you.
- DO NOT place 3 kg or more of objects on an optional work table. Breaking the work table could cause personal injury.

- DO NOT touch the metal portion of the guide board in the automatic duplexer as it could burn you.

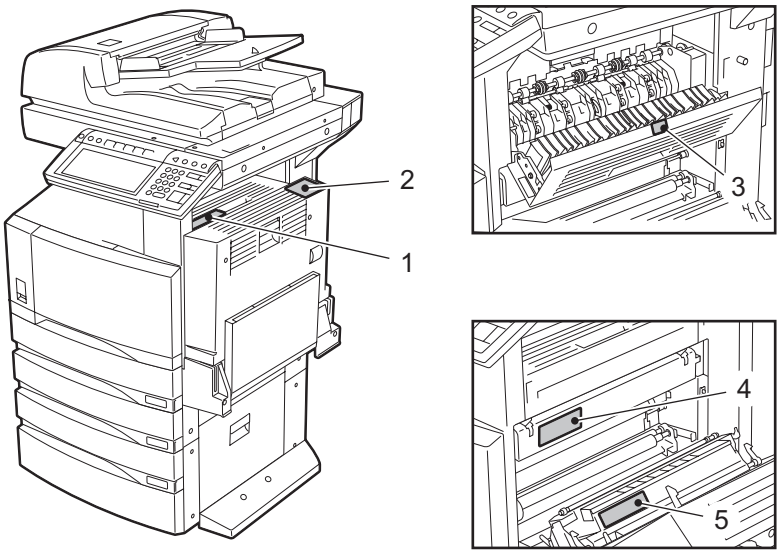

1: Warning for high temperature areas (Ventilation holes)
2: Warning for high temperature areas (Fuser unit)

Other Points

- Be very careful to treat the touch panel gently and never hit it. Breaking the surface could cause malfunctions.
- DO NOT turn the power OFF with jammed paper left inside the multifunctional digital systems.
  This could cause malfunctions when the main switch is turned ON next time.
  To turn the power OFF, see "Turning off the Power (Shutting down)" 📖 Page 31.
- Be sure to turn the power OFF when leaving the office or if there is a power outage. However, DO NOT turn the power OFF if the weekly timer is in use.
  To turn the power OFF, see "Turning off the Power (Shutting down)" 📖 Page 31.

During Maintenance or Inspection

Warning

- NEVER attempt to repair, disassemble or modify the multifunctional digital systems by yourself. You could cause a fire or get an electric shock.
  ALWAYS contact your Service representative for maintenance or repair of the internal parts of the multifunctional digital systems.
- ALWAYS keep the plug and outlet clean. Prevent them from accumulating dust and dirt. This could cause a fire and give you an electric shock due to the heat released by electric leakage.
- DO NOT let liquids such as water and oil get into the system when cleaning the floor. This could cause a fire and give you an electric shock.

Caution

- DO NOT touch the stapling area. The actual needle point could cause you personal injury.
  "Saddle-stitch Finisher (MJ-1025)" 🕮 Page 279, "Single-staple Finisher (MJ-1022)" 🕮 Page 277

Other Points

- DO NOT use such solvents as thinner or alcohol when cleaning the surface of the multifunctional digital systems.
  - This could warp the shape of the surface or leave it discoloured.
  - When using a chemical cleaning pad to clean it, pay attention to any cautionary points.

When Handling Supplies

Caution

- NEVER attempt to incinerate toner cartridges. This could cause an explosion. DO NOT dispose of used toner cartridges. Your service technician will collect them. "2.REPLACE TONER CARTRIDGE SYMBOL" 📖 Page 254

DISCLAIMER NOTICE

The following notice sets out the exclusions and limitations of liability of TOSHIBA TEC CORPORATION (including its employees, agents and sub-contractors) to any purchaser or user (‘User’) of the e-STUDIO230/280, including its accessories, options and bundled software (‘Product’).

1 The exclusion and limitations of liability referred to in this notice shall be effective to the fullest extent permissible at law. For the avoidance of doubt, nothing in this notice shall be taken to exclude or limit TOSHIBA TEC CORPORATION’s liability for death or personal injury caused by TOSHIBA TEC CORPORATION’s negligence or TOSHIBA TEC CORPORATION‘s fraudulent misrepresentation.

2 All warranties, conditions and other terms implied by law are, to the fullest extent permitted by law, excluded and no such implied warranties are given or apply in relation to the Products.

3 TOSHIBA TEC CORPORATION shall not be liable for any loss, cost, expense, claim or damage whatsoever caused by any of the following:

(a) use or handling of the Product otherwise than in accordance with the manuals, including but not limited to Operator’s Manual, User‘s Guide, and/or incorrect or careless handling or use of the Product;
(b) any cause which prevents the Product from operating or functioning correctly which arises from or is attributable to either acts, omissions, events or accidents beyond the reasonable control of TOSHIBA TEC CORPORATION including without limitation acts of God, war, riot, civil commotion, malicious or deliberate damage, fire, flood, or storm, natural calamity, earthquakes, abnormal voltage or other disasters;
(c) additions, modifications, disassembly, transportation, or repairs by any person other than service technicians authorized by TOSHIBA TEC CORPORATION; or
(d) use of paper, supplies or parts other than those recommended by TOSHIBA TEC CORPORATION.

4 Subject to paragraph 1, TOSHIBA TEC CORPORATION shall not be liable to Customer for:

(a) loss of profits; loss of sales or turnover; loss of or damage to reputation; loss of production; loss of anticipated savings; loss of goodwill or business opportunities; loss of customers; loss of, or loss of use of, any software or data; loss under or in relation to any contract; or
(b) any special, incidental, consequential or indirect loss or damage, costs, expenses, financial loss or claims for consequential compensation;

whatsoever and howsoever caused which arise out of or in connection with the Product or the use or handling of the Product even if TOSHIBA TEC CORPORATION is advised of the possibility of such damages.

TOSHIBA TEC CORPORATION shall not be liable for any loss, cost, expense, claim or damage caused by any inability to use (including, but not limited to failure, malfunction, hang-up, virus infection or other problems) which arises from use of the Product with hardware, goods or software which TOSHIBA TEC CORPORATION has not directly or indirectly supplied

1. BEFORE USING EQUIPMENT

1. DESCRIPTION OF EACH COMPONENT 20
Main Components 20
Optional Equipment 21
Control Panel 23
Adjustment of the Angle of the Control Panel 25
Touch Panel 27
2. TURNING ON THE POWER SWITCH 31
Turning on/off the Power 31
Controlling the Use of the Copier with Department Codes 33
3. SWITCHING TO THE ENERGY-SAVING MODE 34
4. SETTING COPY PAPER 35
Acceptable Copy Paper Types and Sizes 35
Toshiba-Recommended Paper/Handling and Storing Paper 37
Changing the Paper Size of the Drawer/Setting the Drawer for Special Uses 38

1. DESCRIPTION OF EACH COMPONENT

Main Components

1: Front cover
2: Drawers
3: Operator's manual pocket (back side)
4: Power switch
5: Automatic duplexer
6: Bypass tray
7: Original scale
8: Inner tray
9: Control panel
10: Touch panel
11: Touch panel contrast adjustment volume
12: Toner
*1, *2: Optional

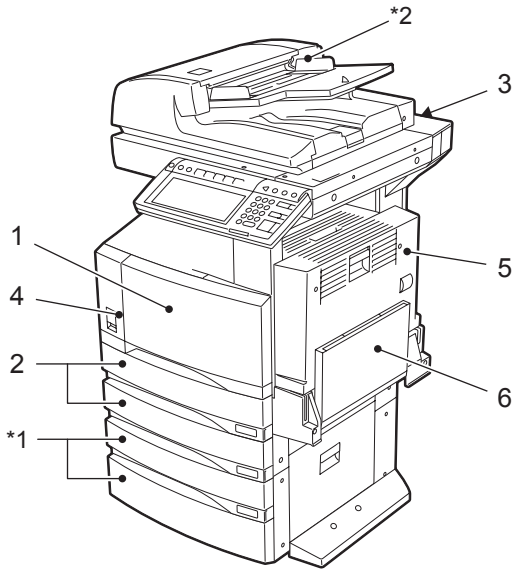

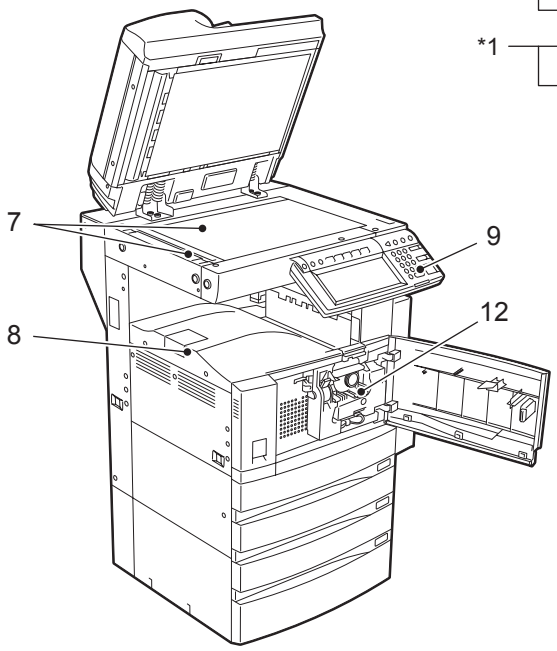

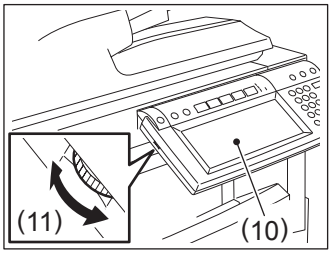

Optional Equipment

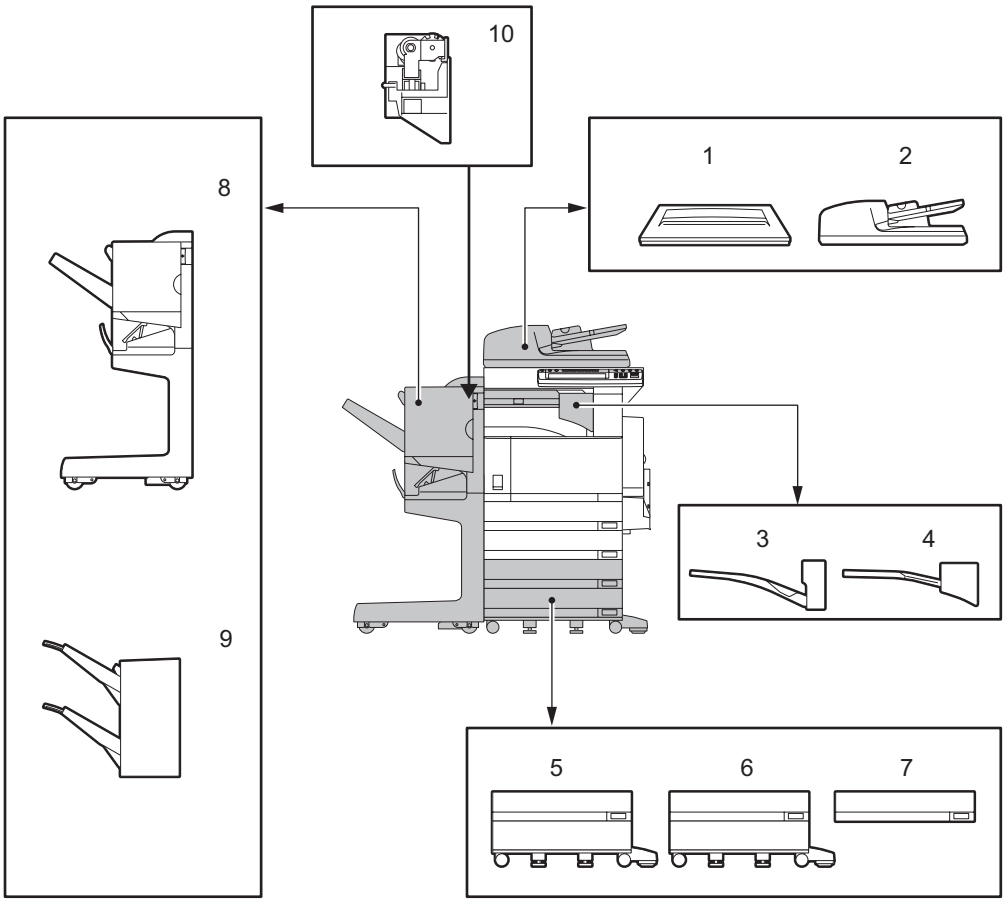

1 **: Original cover (KA-3511)**
Holds an original.

2 **: Reversing automatic document feeder (MR-3016)**
Automatically feeds a placed stack of originals one by one to have them copied.

3 **: Offset tray (MJ-5005)**
Enables copied and printed sets to be collated or stacked in groups with each set being offset.

4 **: Job separator (MJ-5004)**
Enables Faxes, copies and prints to be output onto separate paper trays.

5 **: Large capacity feeder (KD-1012)**
Feeds up to 2,500 sheets of LT paper (20 lb. Bond) (recommended by Toshiba) continuously.

6 **: Paper feed pedestal (KD-1011)**
Adds one drawer to the equipment.

7 **: Additional drawer module (MY-1021)**
Enables one drawer to be added to the paper feed pedestal.

8 **: Saddle-stitch finisher (MJ-1025)**
Enables the saddle stitching in addition to the sort/group mode and stapling. (Hole punch unit can be installed.) Requires the Bridge unit (KN-3520 sold separately) for the installation.

9 **: Single-staple finisher (MJ-1022)**
Enables the sort/group mode and stapling. Requires the Bridge unit (KN-3520 sold separately) for the installation.

10**: Hole punch unit (MJ-6005)**
Makes punching holes on output pages.

We have other options: Work tray (KK-3511), Fax board (GD-1150), Printer kit (GM-1020), Printer/Scanner kit (GM-2020), Scanner upgrade kit (GM-3020), Fax board 2nd line (GD-1160), Wireless LAN adapter (GN-1010), Scrambler board (GP-1030), Parallel interface kit (GF-1140)
Contact your service technician or representative for the details.

Control Panel

When operating the equipment and specifying the various settings through the equipment itself, use the buttons on the control panel.

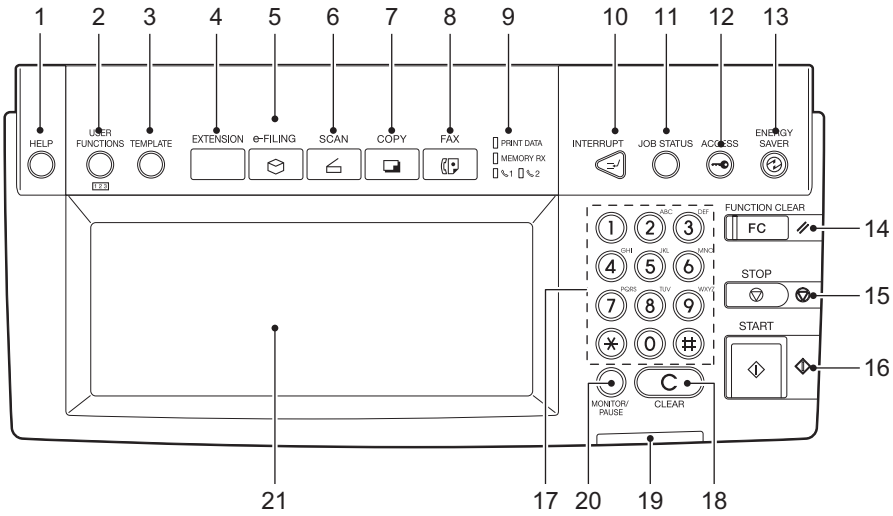

1 **: [HELP] button**

When pressing this button, appropriate operation procedures are displayed.

2 **: [USER FUNCTIONS] button**

Press this button to set the paper size of the drawer, the drawer for special use, or to set/register the settings including such as the change of the default setting of the copy, scan and Fax functions.
See the [User Functions Guide].

3 **: [TEMPLATE] button**

Use this button to store and recall the various settings that are frequently used for copy, scan and Fax functions.

4 **[EXTENSION] button**

This is the button to extend functions in the future. It is invalid at present.

5 **: [e-FILING] button**

Use this button to access the saved image data.

6 **: [SCAN] button**

Press this button to use the scanning function. (Optional printer/scanner kit or both printer kit and scanner upgrade kit is required.)

7 **: [COPY] button**

Press this button to use the copy function.

8 **: [FAX] button**

Press this button to use the Fax/Internet Fax function. (Optional FAX board, printer/scanner kit, or both printer kit and scanner upgrade kit is required.)

9 **: PRINT DATA/MEMORY RX/FAX communication**

If these lamps light, they show the status of receiving data, receiving original(s) standing by to be printed and currently used telephone line (1 or 2).

10**: [INTERRUPT] button**

Use this button to interrupt the copying job in process and to perform another copying job.
You can resume the interrupted copying job by pressing this button again.

11**: [JOB STATUS] button**

Use this button to confirm each status of print or scan or Fax, and journal for TX or RX of Fax.
"1.JOB STATUS" 🕮 Page 190

12**: [ACCESS] button**

Use this button when the department codes have been set.
If this button is pressed after copying, the next user cannot use the copy function without keying in the registered department code. (See the [User Functions Guide].)

13**: [ENERGY SAVER] button**

If you are not going to use the equipment for a while, press this button. The equipment enters the energy saving mode and all the display lamps are turned off.

14**: [FUNCTION CLEAR] button**

When this button is pressed, all selected functions are cleared and returned to the default settings.
"1.GENERAL COPYING PROCEDURES" 🕮 Page 48
*Automatic Function Clear
Even if you do not press the [FUNCTION CLEAR] button, within the specified period of time after copying is finished or after the last button is pressed in a copy procedure, the automatic function clear mode will clear all settings to defaults, and the basic screen will be displayed. While the department management function is being operated, the display returns to the access code input screen.

15**: [STOP] button**

Use this button to stop an ongoing scan and copy operation.

16**: [START] button**

Press this button to start copying, scanning and Fax operation.

17**: Digital keys**

Use these keys to enter the number of copies you want to make and so on.

18**: [CLEAR] button**

Use this button to correct numbers entered with the digital keys such as an incorrect copy quantity.

19**: ERROR lamp**

ERROR lamp lights in red when an error occurs and the equipment needs some actions.

20**: [MONITOR/PAUSE] button**

This button is used when the copier is used as a Fax (optional). (See the [Operator's Manual for Facsimile Function] for detail.)

21**: Touch Panel**

The state of a copier and directions for its operation are expressed as characters and illustrations.

Adjustment of the Angle of the Control Panel

When Adjusting the Angle of the Control Panel

The angle of the control panel is adjustable at any angle from 5 to 45 degrees from the horizontal position.

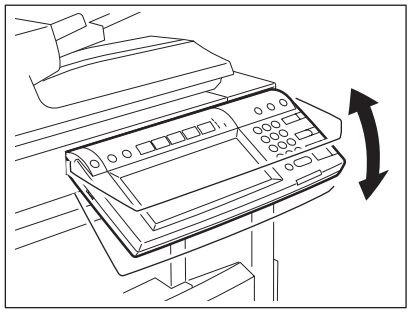

* When changing the angle of the control panel, be careful not to let your hands be caught in the gap between the equipment and the control panel. This could injure you.

When Fixing the Angle of the Control Panel

When you want to fix the angle of the control panel (at 7 degrees from the horizontal position), move the stopper attached on the backside of the control panel from the position (1) to (2).

Perform the following procedure to move the stopper.

1: The position where the angle is adjustable.

2: The position where the angle is fixed.

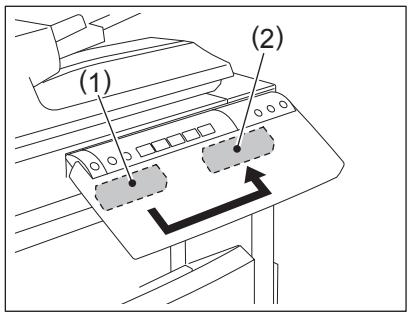

1 Slightly shift the stopper to the right, and then pull it out.

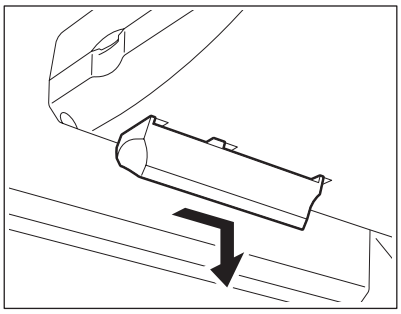

2 Fit the latches of the stopper in the hole of the position (2) and insert them turning the stopper itself.

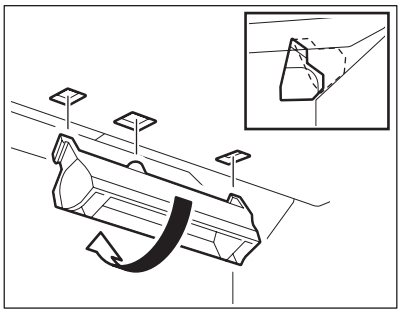

3 Shift the stopper to the left until it clicks.

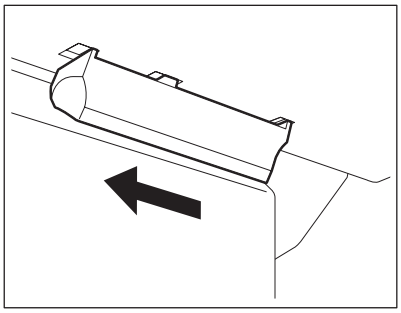

- The angle of the control panel is fixed at 7 degrees.

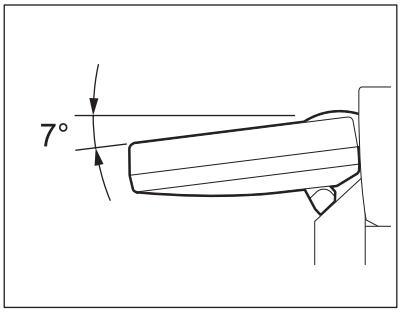

Touch Panel

When the power is turned on, and 'READY' is displayed, the basic screen of the copy function is shown on the touch panel.
On the screen, currently set functions, selected functions and the copier status are shown via messages and illustrations.

* The contents of the touch panel screens in this manual show the equipment with all options.

1: Message
2: Reproduction ratio
3: Total copy quantity
4: Currently selected drawer size
5: Remaining paper level
6: Date and time
7: Set functions confirmation button
8: Function setting area
9: Index buttons

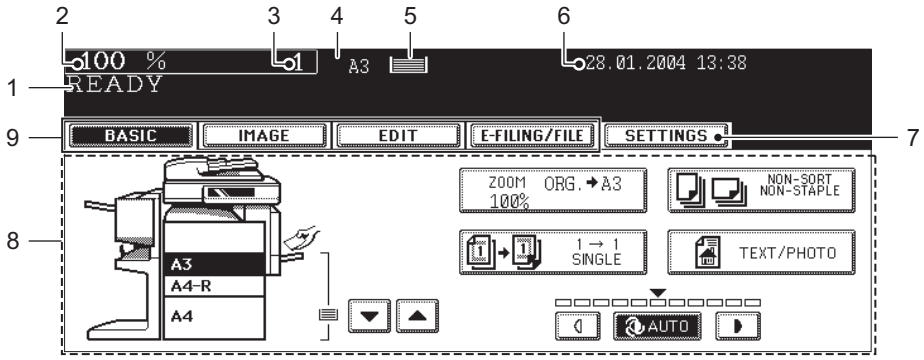

Message Display

The following information is shown on the touch panel:
Equipment status, operational instructions, cautionary messages, reproduction ratios, total copy quantity, paper size of a selected drawer, amount of paper in a selected drawer and the date and time.

Touch-buttons

The various function items are touch-button selectable. Press any buttons lightly with your finger.

- **Index buttons**
  This button is used for switching the menu. The type and the number of the index buttons varies depending on each function of Copy, Scan and Fax.

- **Function setting area**
  This is an area for selecting and setting each function.

1

- **[SETTINGS] (set functions confirmation) button**
  This button allows you to confirm the functions that have been set.
  (An example is shown below.)

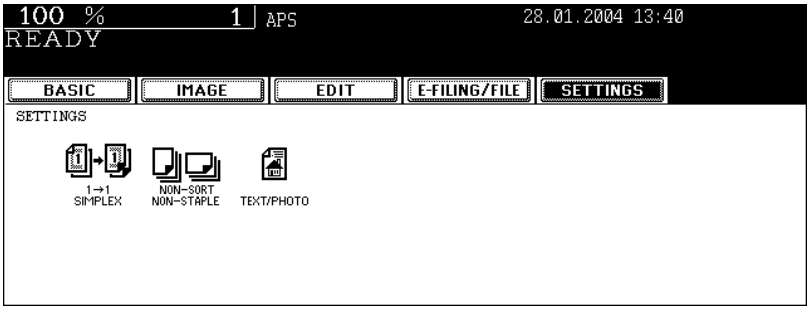

- **The icons displayed on the screen are as follows (some icons may not appear on the screen):**

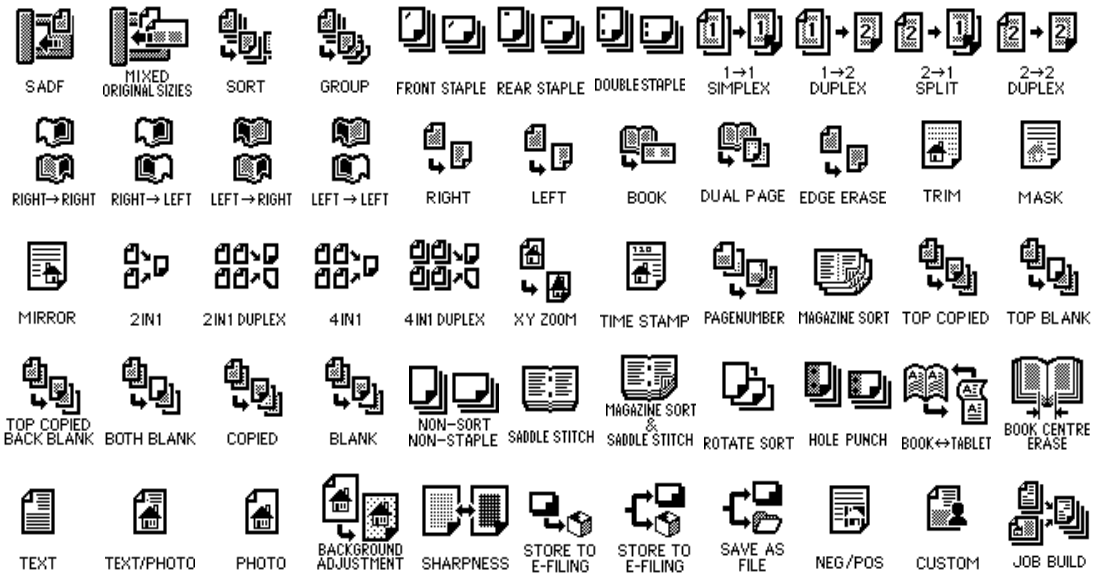

Clearing the Functions Selected

If you press any button that is half-tone shaded, the function selected is cleared. Also, if the copier is left inactive for a while, the automatic function clear works and the setting will be cleared.

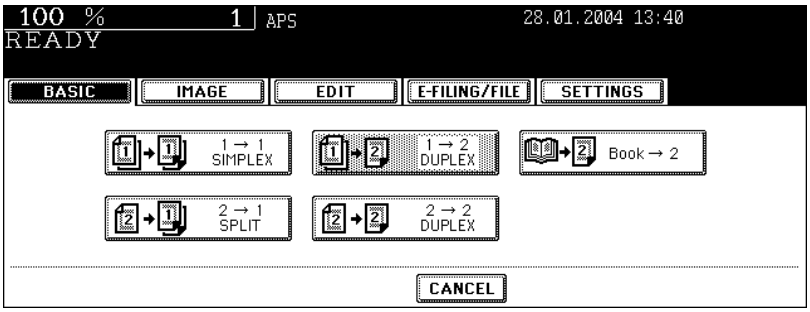

- **Automatic Function Clear**
  Even if you do not press the [FUNCTION CLEAR] button, within the specified period of time (default setting: 45 seconds) after outputting is finished or after the last button is pressed in a procedure, the automatic function clear mode will work to clear all settings, and the basic screen of the copy function will be displayed. While the department management function is being operated, the display returns to the department code input screen.
  The period for the automatic function clear is selectable. (See the [User Functions Guide].)

Touch Panel Contrast Adjustment Volume

To adjust the contrast of the touch panel, turn the adjustment volume on the left side of the control panel. (See the illustration.)

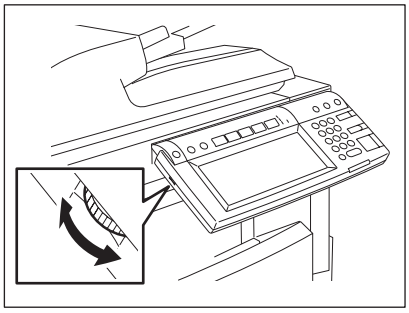

Setting Letters

The following screen is provided for entering letters.
To enter numbers, use the digital keys on the control panel.

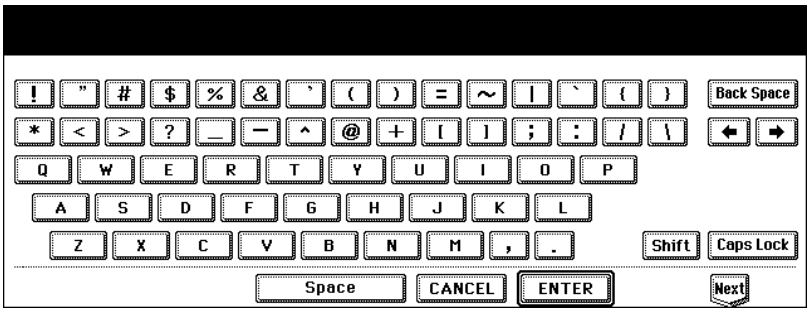

The following buttons are used to enter letters.

- [CapsLock] Press this button to switch capital letters and small letters.
- [B Space] Press this button to delete the letter before the cursor.
- [Space] Press this button to enter a space.
- [←] [→] Press these buttons to move the cursor.
- [ENTER] Press this button to fix all entered letters.
- [Cancel] Press this button to cancel entry of letters.
- [Next] Press this button to display the special characters.
- [Shift] Press this button to enter capital letters.

Turning on/off the Power

Turning on the Power Switch

1 Open the switch cover, and then turn ON the power switch.

- “Wait Warming Up” appears on the Basic screen on the touch panel.

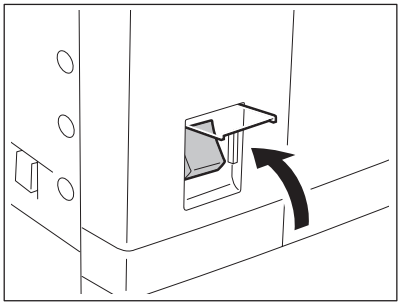

2 About 25 seconds later, the equipment will be ready.

- “READY” appears on the Basic screen.

Tips

- While the copier is warming up, you can use the Auto Job Start function. "3.AUTO JOB START (JOB PRESET)" 📖 Page 57
- “POWER FAILURE” message:
  When restarting the equipment due to the power failure, etc., “POWER FAILURE” appears at the upper right of the screen. To clear it, press the [FUNCTION CLEAR] button twice.
  The job in progress at the time of the power failure is deleted.

Turning off the Power (Shutting down)

When turning off the power of the equipment, perform the following shutdown procedure.
DO NOT turn off the power by switching off the power switch of the equipment as it can cause the failure of the hard disc.
Before turning off the power, be sure that the following 3 conditions are satisfied.

- No jobs are left in the printing job list. See "1.JOB STATUS" 📖 Page 190.
- Make sure that none of PRINT DATA, MEMORY RX and Fax communication lamps is blinking.
- No PCs access the equipment via network.

1 Press the [USER FUNCTIONS] button on the control panel.

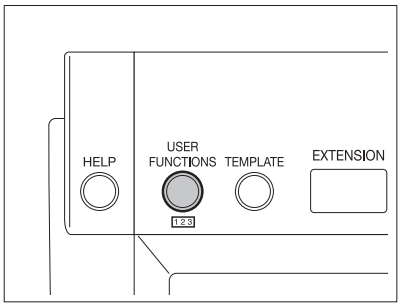

2 Press the [USER] button to enter the user setting menu, and then press the [SHUTDOWN] button.

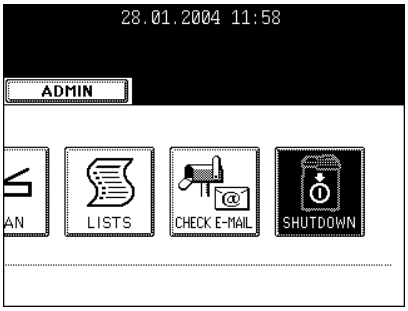

3 "Processing job will be deleted. Are you sure you want to shutdown?" appears on the screen. Press the [YES] button.

- To cancel the shutdown operation, press the [NO] button.

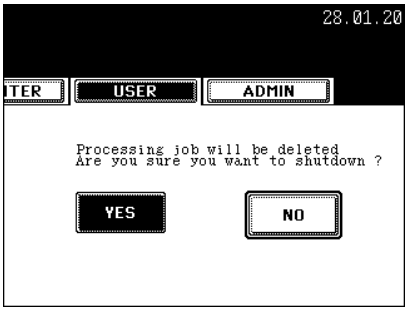

4 "Shutdown in progress" appears on the screen, and then the equipment is shut down.

- The power switch automatically returns to the OFF position.

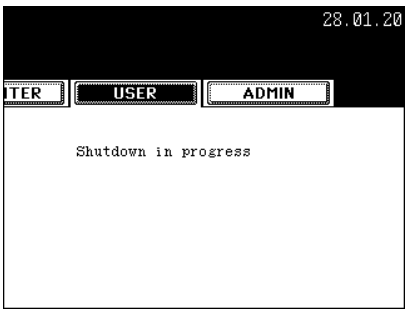

Controlling the Use of the Copier with Department Codes

With the use of the department codes, you can restrict users as well as manage copy volumes made by individual groups or departments of your company. See the [User Functions Guide].

1 When the department management function is in use, the screen shown on the right appears immediately after the power switch is turned on.

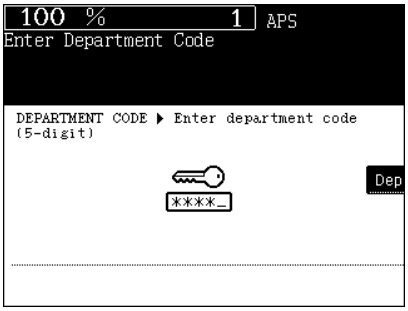

- The same screen is displayed when the [ACCESS] button is pressed or the automatic function clear mode is activated.

2 Key in a registered department code (5-digit).

- The copier will be ready for copying.

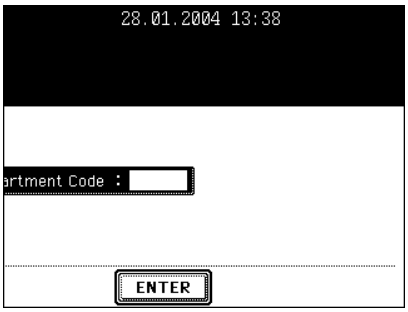

Tip

If “Enter Department Code” remains, the department code you have entered may be incorrect. Press the [FUNCTION CLEAR] button or [CLEAR] button, and then key in the correct code.

- **After Copying is finished.**
  If the department control function is in use, be sure to press the [ACCESS] button on the control panel after finishing the use of the equipment. The display returns to the department code input screen and the department management function will remain active.

3. SWITCHING TO THE ENERGY-SAVING MODE

Switching to the energy-saving mode is available only when one of the following options is installed.
- Fax board
- Printer kit
- Printer kit and scanner upgrade kit
- Printer/scanner kit

If you are not going to use the equipment for a while, press the [ENERGY SAVER] button on the control panel for a few seconds to enter the energy saving mode.
In this mode, the display and lighted button on the control panel are turned off and the [ENERGY SAVER] button lights in green. To start the equipment again, press the [ENERGY SAVER] button (or [COPY], [SCAN], [FAX], [e-FILING], [START] button on the control panel). (To enable the [SCAN] button, optional printer/scanner kit or both printer kit and scanner upgrade kit is required. To enable the [FAX] button, optional FAX board, printer/scanner kit, or both printer kit and scanner upgrade kit is required.)

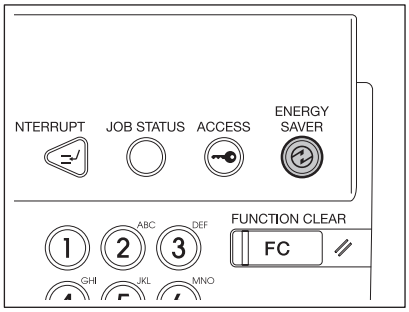

* In the energy-saving mode, when a job for printing, Fax, Internet Fax or E-mail is received, the equipment becomes automatically ready status.

Acceptable Copy Paper Types and Sizes

Feeder	Paper Type	Paper Size	Maximum sheet capacity
Drawers (The optional drawers included)	Plain Paper (64-80 g/m^2)	(Standard Size) A/B format: A3, A4, A4-R, A5-R, B4, B5, B5-R, FOLIO (210 mm x 330 mm) LT format: LD (11” x 17”), LG (8 $^1/_2$” x 14”), LT (11” x 8 $^1/_2$”), LT-R (8 $^1/_2$” x 11”), ST-R (5 $^1/_2$” x 8 $^1/_2$”), COMP (10 $^1/_8$” x 14”), 13” LG (8 $^1/_2$” x 13”), 8.5” SQ (8 $^1/_2$” x 8 $^1/_2$”),	600 sheets (64 g/m^2) 550 sheets (80 g/m^2)
	Thick 1 (81-105 g/m^2)		450 sheets (81-105 g/m^2) * Height: approx. 60.5 mm
Large capacity feeder (Option)	Plain Paper (64-80 g/m^2)	(Standard Size) A4 only	3,000 sheets (64 g/m^2) 2,500 sheets (80 g/m^2)
	Thick 1 (81-105 g/m^2)		2,000 sheets (81-105 g/m^2) * Height: approx. 137.5 mm
Bypass Tray	Plain paper *1 (64-80 g/m^2)	(Standard Size) A/B format: A3, A4, A4-R, A5-R, A6-R, B4, B5, B5-R, FOLIO (210 mm x 330 mm) LT format: LD, LG, LT, LT-R, ST-R, COMP, 13” LG, 8.5” SQ, (Non-Standard size) Length: 100 -297 mm Width: 148 -432 mm	100 sheets (64-80 g/m^2) * Height: approx. 11 mm
	Thick 1 (81-105 g/m^2)		80 sheets (81-105 g/m^2) * Height: approx. 11 mm
	Thick 2 (106-163 g/m^2)		40 sheets (106-163 g/m^2) * Height: approx. 11 mm *2
	Thick 3 (164-209 g/m^2)		30 sheets (164-209 g/m^2) * Height: approx. 11 mm *2
	Tracing paper (75 g/m^2 only)		* Height: approx. 11 mm *2
	Sticker labels		* Height: approx. 11 mm *3
	Envelope	DL (110 mm x 220 mm), COM10 (4 $^1/_8$” x 9 $^1/_2$”), Monarch (3 $^7/_8$” x 7 $^1/_2$”), CHO-3 (120 mm x 235 mm), YOU-4 (105 mm x 235 mm)	* Height: approx. 11 mm
	OHP *2	(Standard Size) A4 only	30 sheets * Height: approx. 11 mm

*1.50-64 g/mm^2 is available for single feed.
*2.Automatic duplex copying is not available.

*3.Use Thick 2 mode for Sticker Labels.

* “Maximum capacity” refers to the number of sheets when the paper recommended by Toshiba is set.
* LT format is the standard size for only use in North America.
* The values shown in the parenthesis are rounded off below a decimal point.

Abbreviations for paper sizes:

LT: Letter, LD: Ledger, LG: Legal, ST: Statement, COMP: Computer, SQ: Square

Toshiba-Recommended Paper/Handling and Storing Paper

The recommended paper

To make copies with a fine image, the following sheets are recommended.
If you use copy paper other than the recommended types, ask your service technician.

Paper Type	Toshiba Recommendation	Paper Weight
Plain Paper	TGIS Paper/Neusiedler	80 g/m^2
Thick 1	Colour Copy/Neusiedler	90 g/m^2
	Colour Copy/Neusiedler	100 g/m^2
Thick 2	Colour Copy/Neusiedler	120 g/m^2
	Colour Copy/Neusiedler	160 g/m^2
Thick 3	Colour Copy/Neusiedler	200 g/m^2
Tracing Paper	Tracing paper/Ostrich International	75 g/m^2 only
Sticker Labels	3478/ZWECK-AVERY	-
OHP Film	PP2500/3M	-
Envelope	-	-

* An OHP film should surely be used in the Toshiba-recommended film. Using other film may cause a malfunction.

Handling and Storing Paper

Pay attention to the following points:

- Avoid using paper that is specially treated or previously printed on another machine, and also avoid performing double copying on the same side of paper; this may cause a malfunction
- Do not use paper with creases, wrinkles, curled paper, paper prone to curling, smooth paper, or tough paper; this may cause paper misfeeds.
- Paper should be wrapped in its wrapping paper and stored in a damp-free place.
- To prevent paper from being folded or bent, store it evenly on a flat surface.

Changing the Paper Size of the Drawer/Setting the Drawer for Special Uses

The paper size of the drawer can be changed. The drawers can also be set for cover sheet, insertion, thick paper 1, Fax and special sheets.

Changing the Paper Size of the Drawer

1 Pull out the drawer carefully until it comes to a stop.

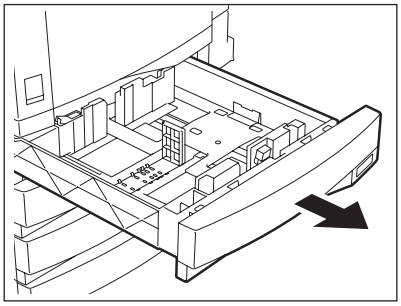

2 Push the lower part of the width guide in the direction of the arrow to remove it; then reinstall the width guide at the desired paper size (indicated on the bottom inner surface of the drawer).

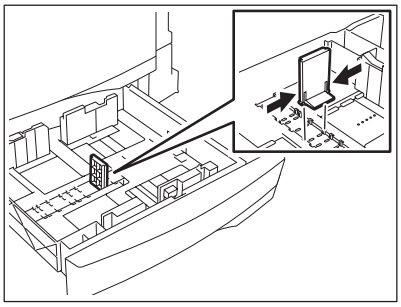

3 Push the arrow part (right side) of the side guide to unlock it.

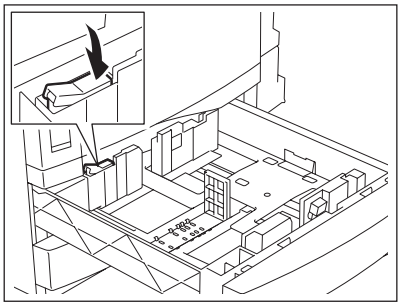

4 While pushing the green lever, set the side guide to the desired paper size (indicated on the bottom inner surface of the drawer).

- Adjust the side guides with both hands.

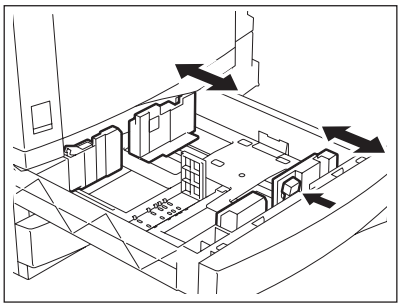

5 Push the arrow part (left side) to lock the side guide.

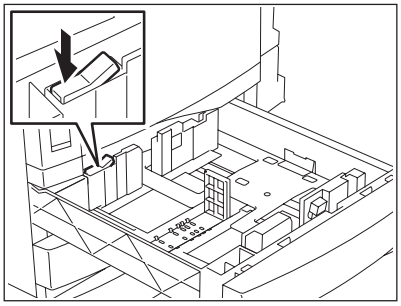

6 Place paper in the drawer(s).

- Place paper face up.
- Maximum number of sheets that can be set. "Acceptable Copy Paper Types and Sizes" Page 35
- Fan the paper well before placing it in the drawer.
- Do not add paper above the line indicated on the guide.
- Do not use creased, folded, wrinkled or damp sheets of paper.

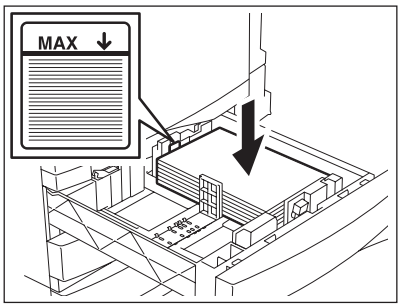

Note

Make sure that a gap of approx. 0.5 mm (less than 1 mm in total) is left between the paper and the side guide. If there is no gap, this could cause paper misfeeding.

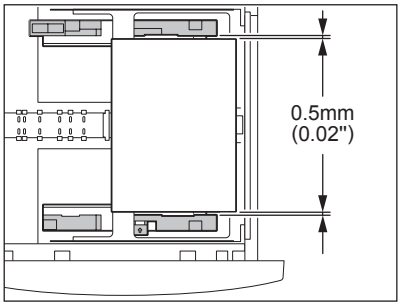

7 Push the drawer straight into the copier until it comes to a stop.

- Be sure to push the drawer fully in.

Tip

Be careful not to let your fingers be caught when closing the drawer. This could injure you.

8 **Change the size mark plate to match with the size of paper that has been set.**

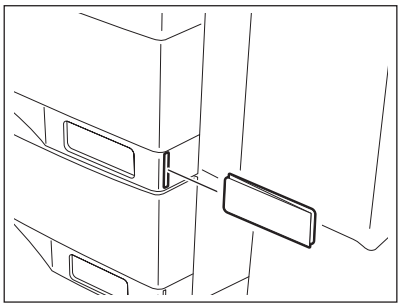

9 **Press the [USER FUNCTIONS] button on the control panel.**

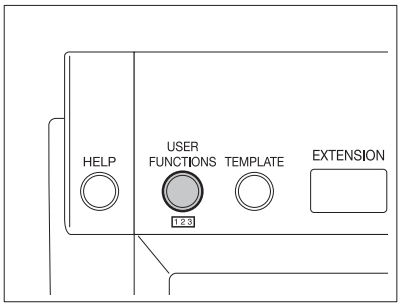

10 **Press the [USER] button, then press the [GENERAL] button on the touch panel.**

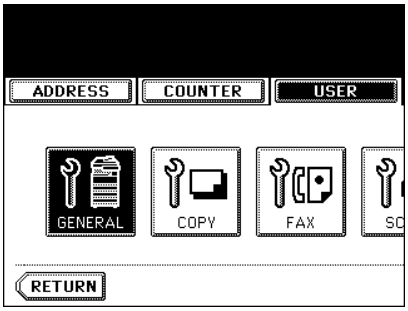

11 **Press the [DRAWER] button.**

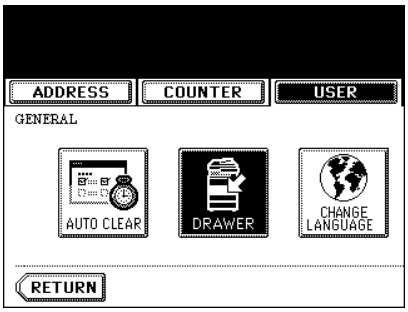

12 **Press the drawer button corresponding to the one which the paper size has been changed, and then press the button indicating the new paper size.**

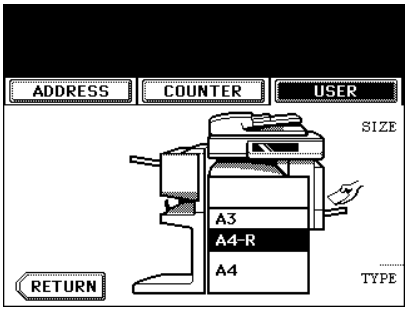

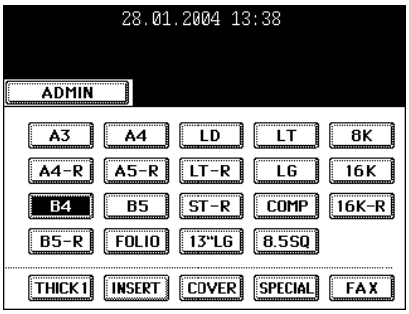

Setting the Drawer for Special Uses

You can set the drawer for various uses (cover sheet, sheet insertion, thick paper, Fax paper, special sheets).

- Acceptable copy paper "4.SETTING COPY PAPER" 📖 Page 35
- Drawer for cover sheet "9.COVER COPYING" 📖 Page 126
- Drawer for sheet insertion "10.SHEET INSERTION MODE" 📖 Page 129
- Drawer for special sheets. Coloured paper, paper with a watermark, etc.

1 **Place paper face up in the drawer(s).**

2 **Press the [USER FUNCTIONS] button on the control panel.**

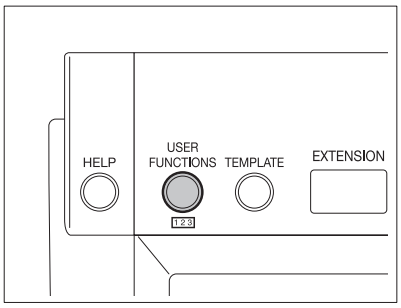

3 **Press the [USER] button to enter the user menu and then press the [GENERAL] button.**

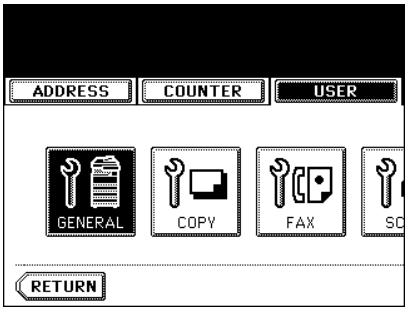

4 **Press the [DRAWER] button.**

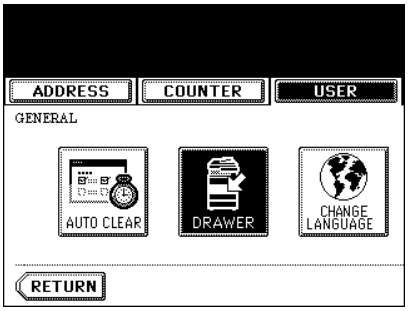

5 **Press the drawer button corresponding to the one in which the paper size has been changed, and then press the button indicating the new paper type.**

- If you want to select the [COVER] or [INSERT] button, make sure that paper with the same size as that for the COVER or INSERT is set in the other drawer including the optional large capacity feeder.

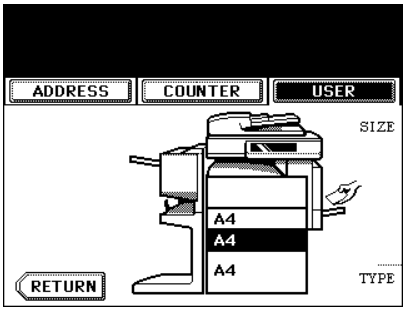

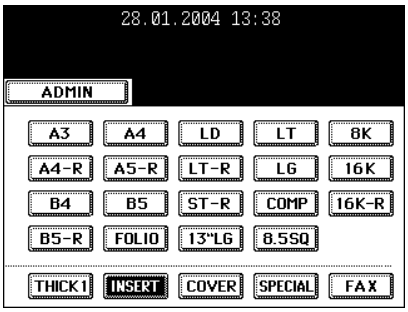

Tips

- Press [THICK 1] depending on the paper weight of the cover sheet, sheet insertion, and special sheet.

  In the case of cover sheet or sheet insertion, $\overset{\times}{\times}_1$ is displayed in the drawer button corresponding to the one in which the paper has been set.

  * For example, when inserting 90 g/m^2 paper, press the [INSERT] button, and press the [THICK 1] button.
- The setting is completed as shown on the right.

  $\overset{\times}{\times}_1$: THICK 1

  $\overset{\times}{\times}_2$: THICK 2

  $\overset{\times}{\times}_3$: THICK 3

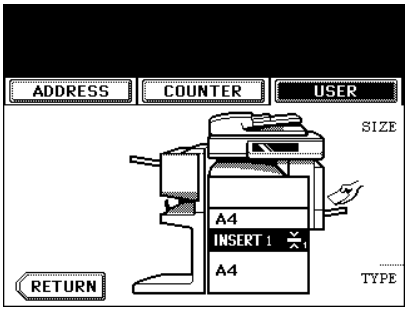

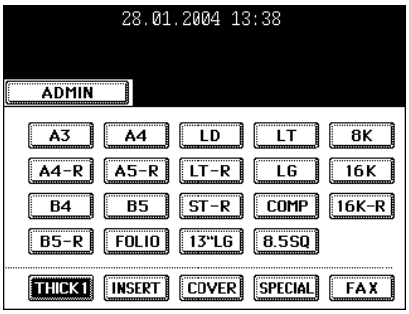

Tips

- 2 drawers can be set for the sheet insertion.
- After having set INSERT 1, press the drawer button corresponding to the one in which the paper for INSERT 2 has been set, and press the [INSERT] button.

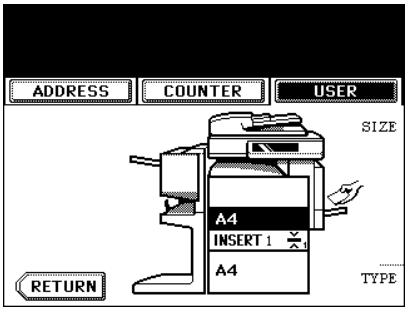

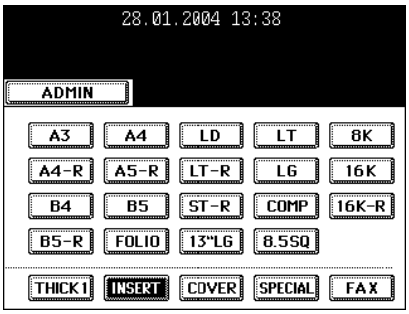

Clearing the Drawer for Special Uses

1 Press the drawer button corresponding to the one which is set for the special use, then press the corresponding button (thick, insert, cover, etc.) on the bottom line of the display.

- If you clear INSERT 1 when both INSERT 1 and INSERT 2 are set, the drawer for INSERT 2 changes to INSERT 1.
- Each of the buttons toggles the associated drawer on/off.

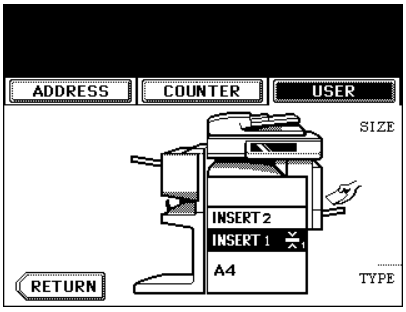

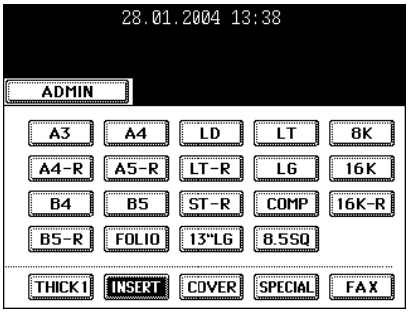

Setting Paper to the Large Capacity Feeder (Optional)

1 Pull out the large capacity feeder carefully until it comes to a stop.

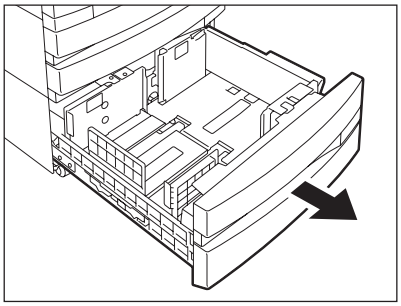

2 Set paper aligned in tray (A) and tray (B).

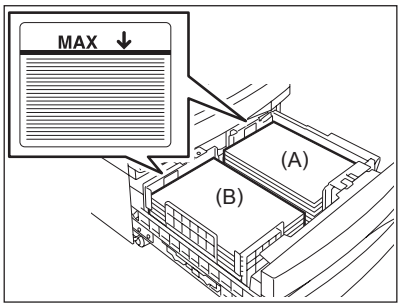

- Place paper face up.
- Maximum number of sheets that can be set. "Acceptable Copy Paper Types and Sizes" 📖 Page 35
- Fan the paper well, then set it for (A) to the right side, and set it for (B) to the left side. (The paper can be set neatly if you pile up the paper little by little alternately in the tray (A) and (B).) Be sure that the centre lever is not open. (Refer to the labels attached in the large capacity feeder.)
- Do not add paper above the line indicated on the guide.
- Paper starts being fed from the elevator tray (A) at first, and when it runs out, the paper on the tray (B) moves to the position (A).
- Do not use creased, folded, wrinkled or damp sheets of paper.

3 Push the drawer of the large capacity feeder straight into the equipment until it comes to a stop.

- Close it completely. The elevator tray automatically moves up to the paper feeding position.

Caution

Be careful not to let your fingers be caught when closing the drawer.

This could injure you.

2. HOW TO MAKE COPIES

2

1. GENERAL COPYING PROCEDURES 48
2. SETTING ORIGINALS 51
   Acceptable Original Types and Sizes/Maximum Number of Sheets that can be Stored 51
   When Placing an Original on the Glass 52
   When Using the Reversing Automatic Document Feeder (optional) 54
3. AUTO JOB START (JOB PRESET) 57
4. INTERRUPT COPYING 59
5. STOPPING THE COPY OPERATION 60
6. BYPASS COPYING 61
   Bypass Copying 61
   Bypass Copying on Standard Size Paper 62
   Bypass Copying on Non-Standard-Size Paper 65
   Storing a Non-Standard Size in MEMORY 67
   Before copying on an envelope 68
   Copying on an envelope 69

1. GENERAL COPYING PROCEDURES

After placing or confirming paper in the drawers, place the originals. When the [START] button is pressed with any settings unchanged, copies are made in the initial (default) settings. You can make copies as desired by setting different copy modes.

Initial (default) Settings

The copy modes that are automatically set when the power is turned on, when the energy-saving mode is cleared or when the [FUNCTION CLEAR] button is pressed on the control panel are called the initial (default) settings. The initial setting when installing the equipment is as follows:

* The initial setting can be changed. See the [User Functions Guide] for details.

Item	Initial (default) setting
Reproduction ratio	100%
Copy quantity	1
Paper selection	Automatic paper selection
Original → Copy	1-sided → 1 sided
Exposure	Auto Exposure
Image quality	TEXT/PHOTO mode
Finishing mode	Placing original on the original glass: Non-sort/non-staple mode Placing the reversing automatic document feeder (optional): Sort mode
Installing the reversing automatic document feeder (optional):	Continuous original feed mode

Copying Procedure

1 Place paper in the drawer(s).

- "Changing the Paper Size of the Drawer" 🕮 Page 38
- "Acceptable Copy Paper Types and Sizes" 🕮 Page 35

Tip

When the desired paper is not placed in any of the drawers or the large capacity feeder:

- Setting the drawer "Changing the Paper Size of the Drawer/ Setting the Drawer for Special Uses" 🕮 Page 38
- "6.BYPASS COPYING" 🕮 Page 61

2 Place the original(s).

- "Acceptable Original Types and Sizes/Maximum Number of Sheets that can be Stored" 🕮 Page 51
- "When Placing an Original on the Glass" 🕮 Page 52
- "When Using the Reversing Automatic Document Feeder (optional)" 🕮 Page 54

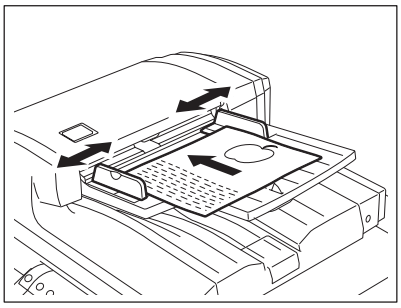

Tip

When the reversing automatic document feeder (optional) is installed and the single feed mode is selected, place the original(s) after the copy mode is set.

3 Select the copy modes as required.

- Copy modes cannot be changed after the [START] button is pressed (including the case when originals are divided into multiple sets when fed).
- Selecting multiple copy modes may be restricted depending on their combination.

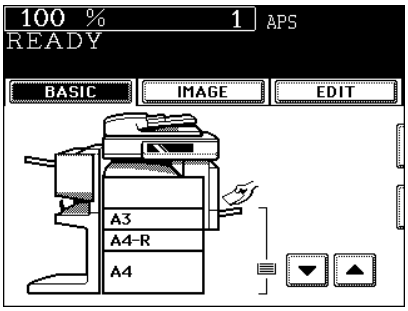

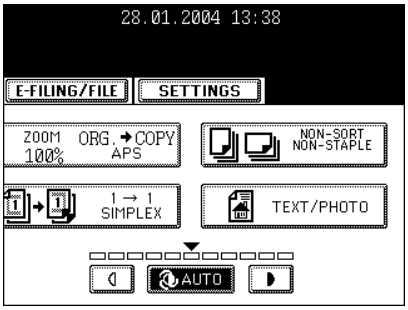

4 Press the [START] button.

- Copying starts.

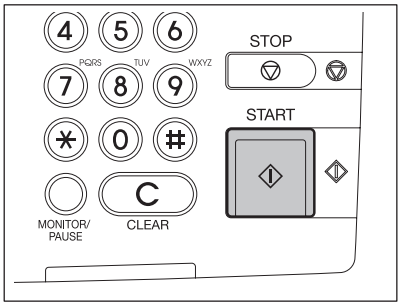

Tip

To copy the original, which is placed on the original glass, after scanning and storing it in the memory (sort mode, 1-side original to 2-sided copies, etc.), follow step 5 and 6.

2

5 Place the next original, and press the [START] button.

- Set the first page of your originals first.
- You can also press the [YES] button to perform the same operation.
- Repeat this step for the subsequent originals.

6 Once the final original has been scanned, press the [FINISHED] button.

- Copying starts. The paper exits with its copied side down.

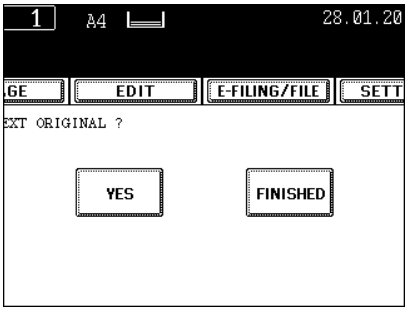

When Coming Across the Situations below

To make multiple sets of copies:

- Key in the copy quantity.
- To correct the input copy quantity, press the [CLEAR] button.
- Raise the stopper as required.

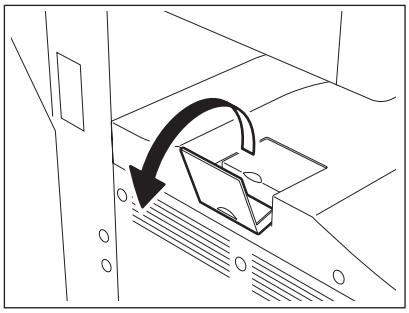

If the paper runs out in the middle of copying:

- The [JOB STATUS] button blinks. Press this button to check which drawer is flashing and add paper.

To stop a copy operation:

"5.STOPPING THE COPY OPERATION" 📖 Page 60

Acceptable Original Types and Sizes/Maximum Number of Sheets that can be Stored

Acceptable Original Types and Sizes

Setting place	Types of originals	Maximum size	Sizes capable of automatic detection
Glass *1	Sheets 3-dimensional objects Books	Width: 297 mm Length: 432 mm	(Standard size) A/B format: A3, A4, A4-R, A5-R, B4, B5, B5-R LT format: LD (11” x 17”), LG (8 $^1/_2$” x 14”) LT (11” x 8 $^1/_2$”), LT-R (8 $^1/_2$” x 11”) ST-R (5 $^1/_2$ x 8 $^1/_2$”)
Reversing automatic document feeder (optional) *2	Plain paper Recycled paper: 1-sided Original: 50-127 g/m^2 2-sided Original: 50-105 g/m^2	Width: 297 mm Length: 432 mm	(Standard size) A/B format: A3, A4, A4-R, A5-R, B4, B5, B5-R, FOLIO (210 mm x 330 mm) LT format: LD, LG, LT, LT-R, ST-R, COMP (10 $^1/_8$” x 14”) *3

*1.Do not place any heavy object (4 kg or over) on the glass.
*2.Even if listed under “Types of originals”, some of the originals may not be used depending on paper quality.
*3.Automatic detection cannot be worked when the different paper formats are mixed.

* LT format is the standard size used in the North America.
* When the original of LT format is placed on the glass, the automatic detection may not work correctly.

Tip

Maximum number of sheets (all sizes) that can be set in the reversing automatic document feeder (optional): 100 sheets (50-80 g/m^2) or less than 16 mm in height.

Maximum Number of Sheets that can be Stored

Up to 1,000 sheets of A4 size can be stored per 1 job during copy, or until the memory becomes full. When exceeding the above limit during the scanning, the following screen is displayed. The scanned data is printed by pressing the [YES] button and it is deleted by pressing the [NO] button.

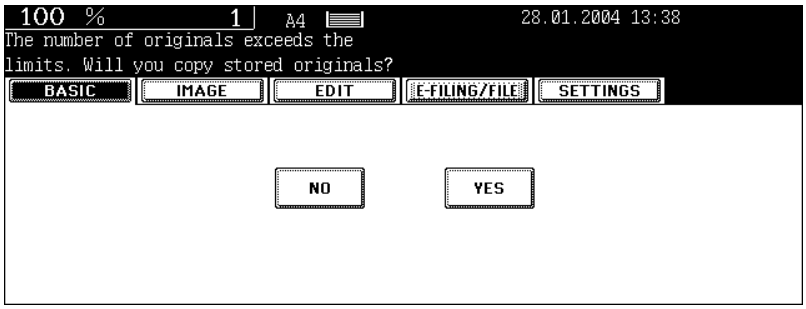

When Placing an Original on the Glass

Sheet Originals

1 Raise the original cover or the reversing automatic document feeder (optional), and place the original face down on the glass.

- Raise it 60 degrees or more for detecting the original.
- A: Original

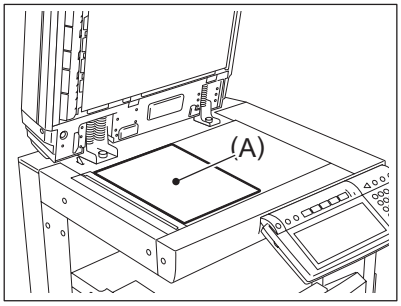

2 Align the original against the left rear corner of the glass.

3 Lower the original cover or the reversing automatic document feeder (optional) slowly.

- When copying originals with high transparency, such as OHP films and tracing paper, place a blank sheet of paper, the size of the original or larger, over the original.
  - A: Original
  - B: Blank sheet

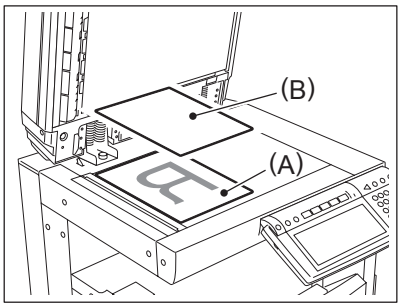

Book-type Originals

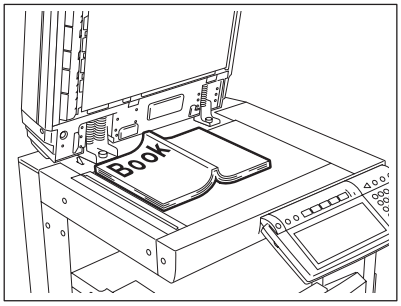

1 Raise the original cover or the reversing automatic document feeder (optional), and place the original in the direction shown in the illustration.

- When using the Book-type Originals->2-sided Copies ("5. Book-type Originals to 2-Sided Copies" 🕮 Page 100) or the Dual-Page ("4.DUAL-PAGE" 🕮 Page 115) function, centre the book original on the yellow indicator line.

2 Lower the original cover or the reversing automatic document feeder (optional) slowly.

- Do not try to force the original cover or the reversing automatic document feeder to fully close over a very thick original, such as a big book. Copies can be made even if the cover or feeder does not close fully.
- During copying, an intense light may leak out. Do not look at the original glass surface.

When Using the Reversing Automatic Document Feeder (optional)

Precautions for Using the Reversing Automatic Document Feeder

Do not use the following type 1 to 7 of originals as they may misfeed or become damaged:

1 : Badly wrinkled or folded originals; in particular, originals whose leading edge is curled may fail to be correctly fed.
2 : Originals with carbon paper
3 : Taped, pasted or clipped (cut out) originals
4 : Clipped or stapled originals
5 : Originals with holes or tears
6 : Damp originals
7 : OHP film originals
* Do not use tracing paper, permeable paper and coating paper (coating with wax, etc.).

Also, the following type 8 and 9 of originals should be handled carefully:

8 : Originals, 2 of which, when pinched between 2 fingers, cannot be moved, or originals that are surface-treated may fail to separate properly.
9 : Folded or curled originals should be smoothed before being used.
* The different sized originals are limited for setting. "Setting the [MIXED ORIGINAL SIZE]" 📖 Page 78

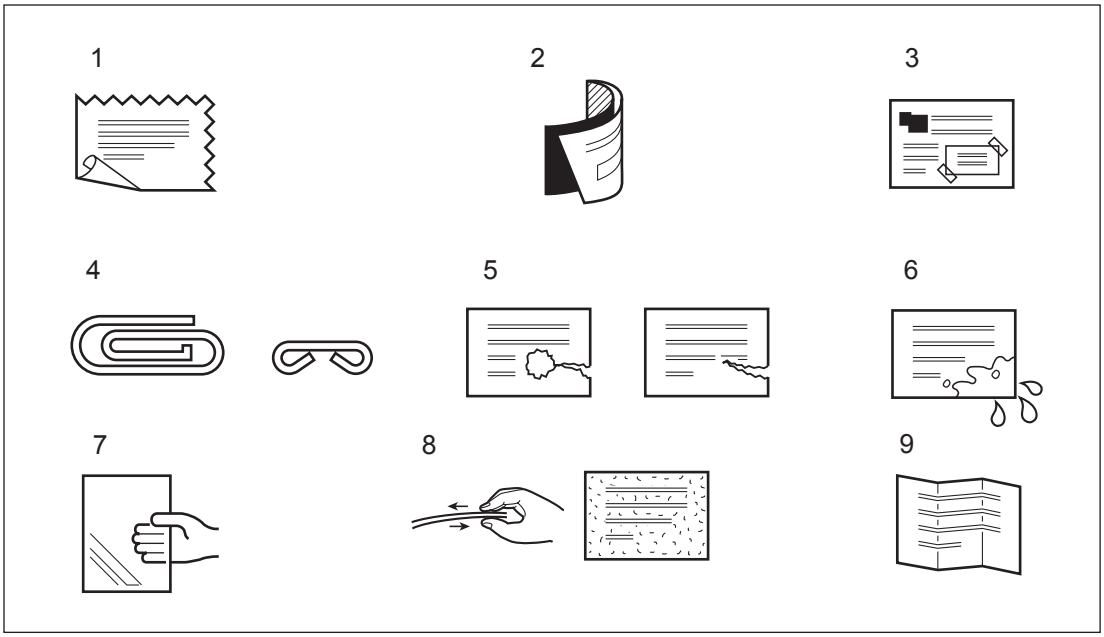

Tip

If the scanning area and guide area are dirty, it may cause black streaks, etc. on the printed paper. Cleaning them preferably once a week is recommended. See "Weekly Maintenance" 📖 Page 286

In the Continuous Feed Mode

* See "Continuous Feed Mode" 🕮 Page 141
* To set originals with the different size, see "Setting the [MIXED ORIGINAL SIZE]" 🕮 Page 78

1 After aligning the edges of originals, place the originals face up and align the slides to their width.

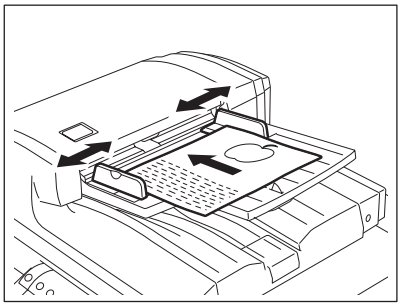

- Align the originals in order from the top because they will be fed from the top.
- One original sheet is also acceptable.
- Maximum number of sheets (all sizes) that can be set in the reversing automatic document feeder: 100 sheets (50-80 g/m^2) or less than 16 mm in height.
- To set the mixed-sized originals, see "Setting the [MIXED ORIGINAL SIZE]" 🕮 Page 78.
- Use the original stopper as required.

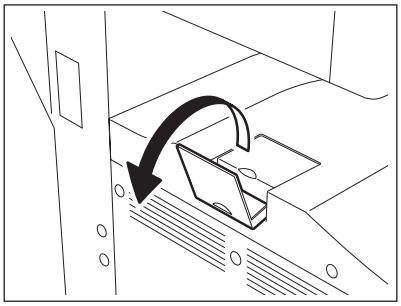

Tip

When the number of originals is too large to be set at one time, you can divide the originals into several sets and set them one after another. To do so, place the first set of originals first and press the [CONTINUE] button while the scanning is in progress. After they have been scanned, place the next set of originals.

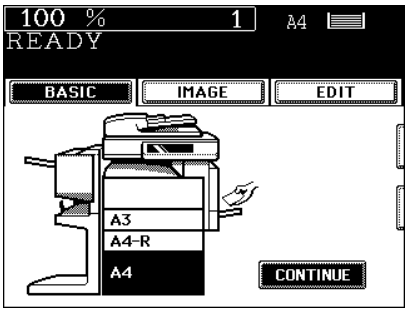

Inside the Single-feed Mode

See "Single-feed Mode" 📖 Page 142

1 Align the slides to the desired original size.

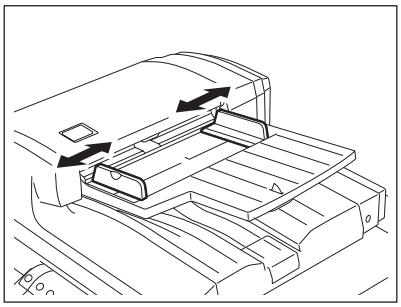

2 Insert the original with its face up and straight along the slides, it will be pulled in automatically.

- When the original starts being pulled in, let go of it.

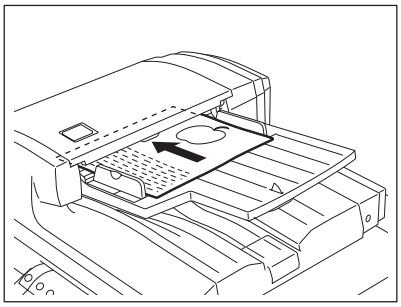

3. AUTO JOB START (JOB PRESET)

While warming up or multi-copying, you can reserve the copy.

Setting Auto Job Start

1 Place the original(s).

2 Select the copy mode.

Tip

Be sure that the job starts in the previous copy mode if you do not select the copy mode.

3 Press the [START] button.

- Up to 6 jobs can be stored in the memory. Place the originals of the 6th job on the original glass or the reversing automatic document feeder (optional) and press the [START] button. Then “Auto Start” appears:
- Up to 1,000 sheets of A4 size can be stored per 1 job, or until the memory becomes full. (For the screen when the maximum number of sheets exceeded, see "Maximum Number of Sheets that can be Stored" 📖 Page 51.)

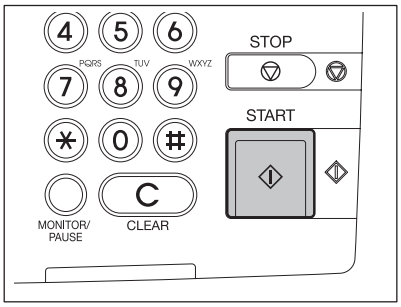

Confirming and Canceling Auto Job Start

- **Confirming auto job start and canceling the job waiting to be copied.**

  Press the [JOB STATUS] button on the control panel to display the job list for confirming and canceling the data.

  See "1.JOB STATUS" 🕮 Page 190 for canceling the job.

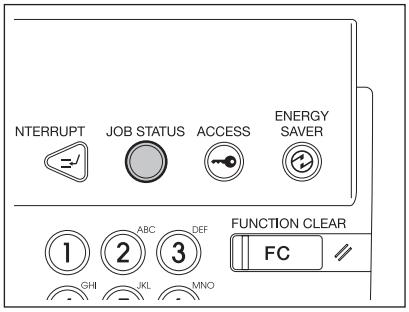

- **Canceling auto job start.**

  Press the [STOP] button on the control panel to cancel the job during the scanning or in the status that the 6th job is being received to be stored.

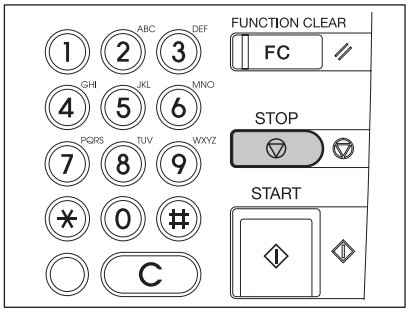

4. INTERRUPT COPYING

While multi-copying is in progress, you can interrupt and make copies from different originals.

* The following modes cannot be used with interrupt copying:
- Cover sheet copying
- Sheet insertion copying
- Scan to e-filing/Save as file

1 Press the [INTERRUPT] button.

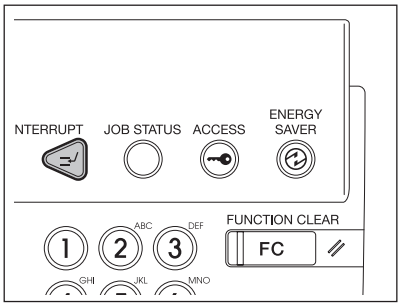

- “Job interrupted job 1 saved” appears.
- Interrupt copying is available while copying is in progress.

Tip

When “Auto Start” is displayed, you cannot make interrupt copying.

2 Replace the original with a new one.

- "2.SETTING ORIGINALS" 📖 Page 51

● Select other copy modes as required.

3 Press the [START] button.

4 After you have finished interrupt copying, press the [INTERRUPT] button again.

- “READY to resume job 1” appears.

Tip

Without performing step 4, the interrupt copying mode will automatically be cancelled by the automatic function clear and the previously interrupted copy job will resume in a certain period of time after the interrupt copying has finished.

5. STOPPING THE COPY OPERATION

If you want to stop the operation during scanning or multi-copying, the [STOP] button is used.

2

1 Press the [STOP] button on the operational panel during the scanning or multi-copying.

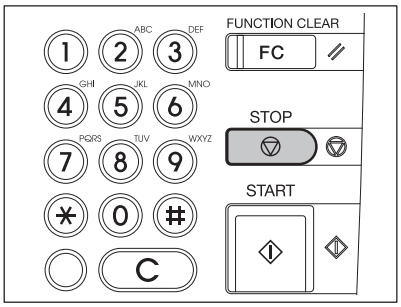

2 When the menu on the right is displayed, press the [MEMORY CLEAR] button.

- During scanning: the data is deleted.
- During multi-copying: the data is deleted and its operation stops.

Tip

If the waiting data remains, it starts to be outputted.

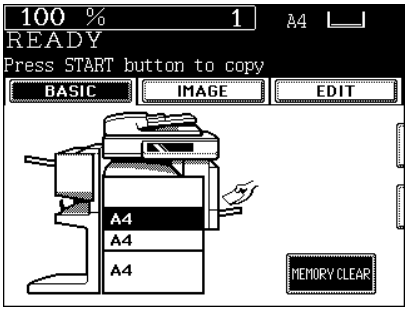

6. BYPASS COPYING

Bypass Copying

When you want to make copies on thick paper, OHP film, tracing paper, sticker labels or other special sheet, use the sheet bypass. (Only Thick 1 paper can be set in the drawer "Setting the Drawer for Special Uses" 📖 Page 41).

If the desired size of paper (standard size) is not set in the drawers, or if you want to make copies on non-standard size paper, make bypass copies.

The modes below are available even in bypass copying if the paper size is specified:

- Dual-page
- Duplex copying
- Image shift
- Edge erase

In these cases, the setting procedures of the following 2 sizes of paper are different.

- Bypass copying on standard size paper "Bypass Copying on Standard Size Paper" 📖 Page 62
- Bypass copying on non-standard size paper "Bypass Copying on Non-Standard-Size Paper" 📖 Page 65

* When copying is finished, the lamp of the [FUNCTION CLEAR] button lights. The bypass copying mode automatically returns to the default mode by pressing the [FUNCTION CLEAR] button or after a while the automatic function clear mode works and the settings will be cleared.

* The copier stops its operation when the paper set on the bypass tray has run out even if there is the same size of copy paper in the drawer. The copier starts again when adding the paper on the bypass tray.

Bypass Copying on Standard Size Paper

1 Place paper on the bypass tray, and then align the guides with the size of the paper.

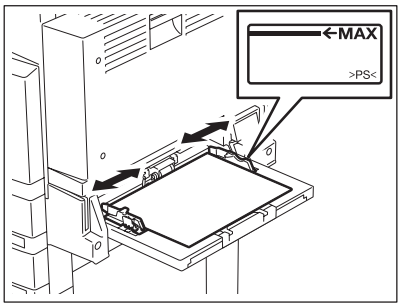

- When adjusting the width of the side guide, while holding down the knob of the side guide, slide the side guide.
- “Ready for bypass feeding” appears.
- Acceptable paper type for bypass copy "Acceptable Copy Paper Types and Sizes" 📖 Page 35
- Place the paper with the side to be copied facing down.
- If you put several sheets on the bypass tray at a time, fan the paper well before placing it.
- Place the paper so as not to exceed the line indicated on the guides.
- Do not push the paper forcibly into the entrance of bypass feeding. It may cause a paper jam.

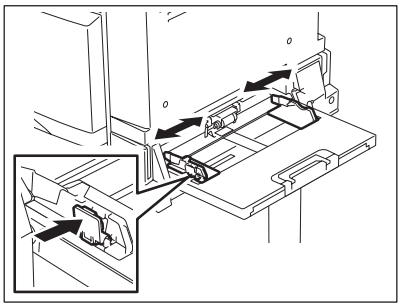

Tips

- Draw the triple paper holder depending on the paper size.
- Raise (B) before placing A3/LD size or larger.

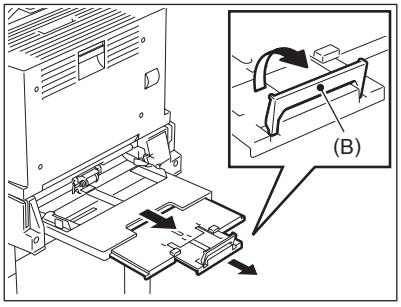

2 Place the original(s).

3 Press the button that represents the size of the paper that has been set for A3, A4, B4 and B5.

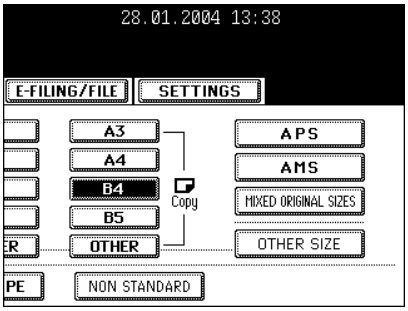

Tip

When the paper size is not specified, the copying speed may be lower due to the cleaning operation inside the copier.

4 **When the standard size paper other than A3, A4, B4 and B5 is set, press the [OTHER SIZE] button.**

- See "Setting the [OTHER SIZE] button" 📖 Page 77.

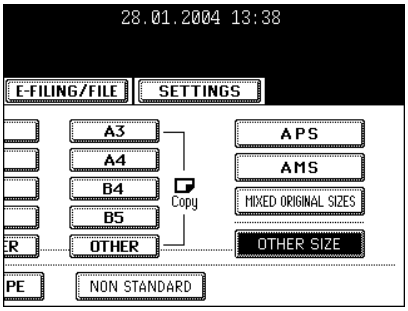

5 **Press the paper size button corresponding to the paper that has been set.**

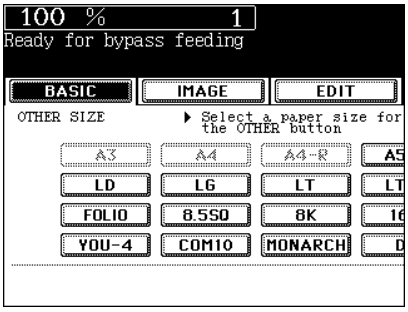

6 **Press the [OTHER] button.**

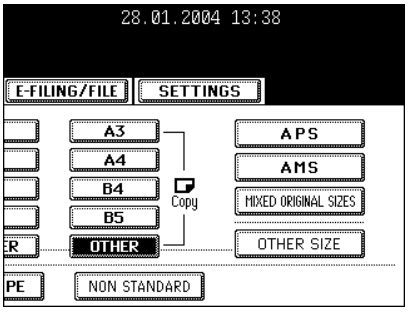

7 **Press the [MEDIA TYPE] button when the paper other than plain paper is set.**

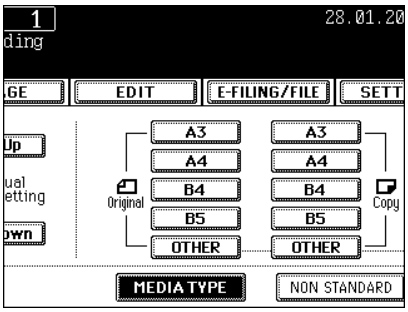

2

8 Select the media type corresponding to the paper that has been set, and then press the [ENTER] button.

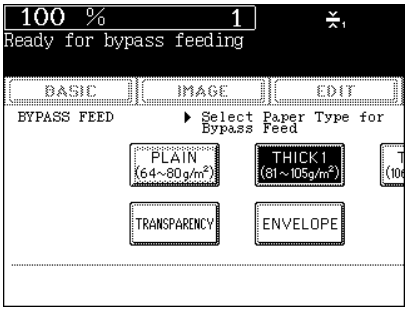

Tip

If you select the media type not corresponding to the paper that has been set, it may cause a problem such as a paper jam, significant image deterioration, etc.

- Select other copy modes as required.

9 Press the [START] button.

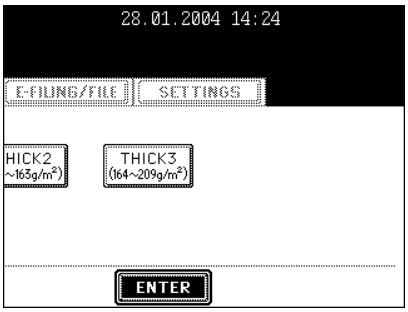

Tip

When copying on OHP films, pick up copies one by one from the inner tray.
When the exited copies are piled up, they will have more curl and it may cause this OHP film cannot be projected properly.

Bypass Copying on Non-Standard-Size Paper

Non-standard paper falls within the following ranges:
A (Length): 100-297 mm, B (Width): 148-432 mm

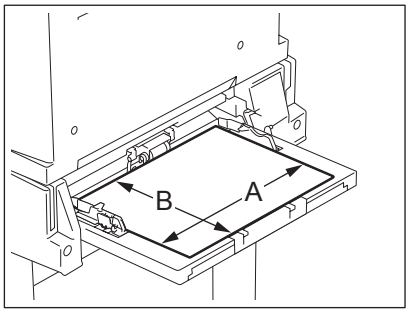

1 **Follow steps 1 to 2 on "Bypass Copying" 📖 Page 61.**

2 **Press the [NON STANDARD] button.**

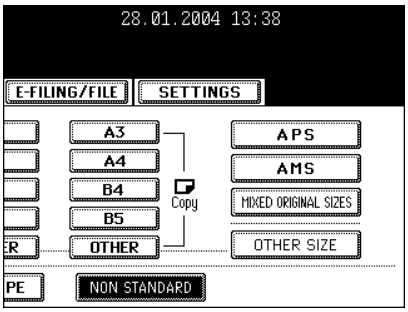

3 **Key in each dimension (length and width), or recall the data stored in MEMORY, and then press the [ENTER] button.**

- When using the digital keys to key in the size:
  Key in the length and press the [SET] button. Similarly, set the value for the width.

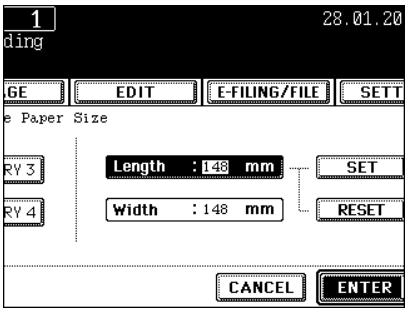

2

- Press the [MEMORY 1] (or [MEMORY 2], [MEMORY 3], [MEMORY 4]) button, the paper size memorized in the MEMORY 1 appears.

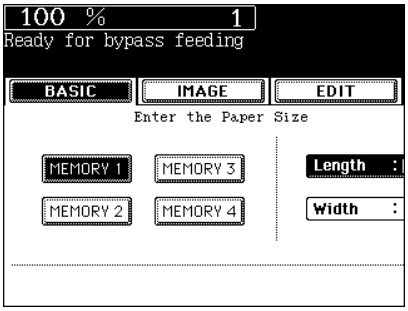

Tip

The non-standard size frequently used can be stored in the memory. Press the [MEMORY 1] (or [MEMORY 2], [MEMORY 3], [MEMORY 4]) button which you want to store, key in the size of length and width and press the [MEMORY] button.
Data is overwritten.

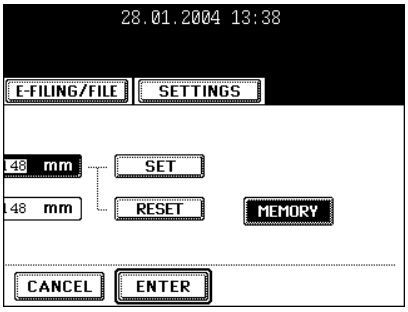

- Select other copy modes as required.

4 Press the [START] button.

Storing a Non-Standard Size in MEMORY

It is convenient to store a frequently used non-standard-size paper in memory.

1 Follow steps 1 to 2 on "Bypass Copying" 📖 Page 61.

2 Press the [NON STANDARD] button.

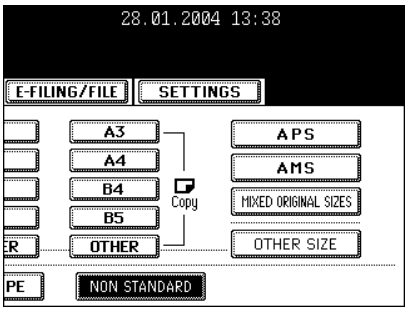

3 Press the desired memory number button.

- When the paper size is '0 mm', the selected memory number button is vacant.
- When the paper size is displayed, a non-standard size is already stored in the selected memory number. To delete the settings, follow step 4. New settings will be rewritten and stored on that memory number.

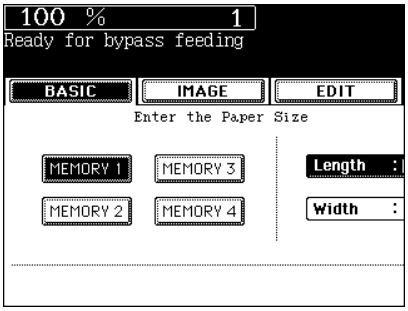

4 Key in each dimension using the digital keys, and then press the [MEMORY] button.

- Key in the length and press the [SET] button. Similarly, set the value for the width.
- The paper size is stored in the highlighted Memory Number.

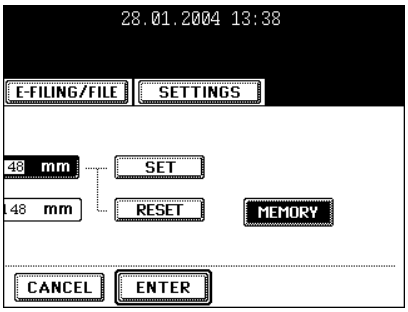

Before copying on an envelope

The acceptable envelope sizes are as follows.

- CHO-3 (120 mm x 235 mm), YOU-4 (105 mm x 235 mm), COM10 ($4^1/_8$" x $9^1/_2$"), Monarch ($3^7/_8$" x $7^1/_2$"), DL (110 mm x 220 mm)

The recommended envelope

COM10	Westvaco Columbian CO138
Monarch	Mailwell No. 553
CHO-3	-
YOU-4	-
DL	-

Cautions when placing an envelope on the bypass tray
Do not use the following envelopes as they may misfeed or become damaged.

1 . Badly curled, wrinkled or folded envelopes
2 . Extremely thick or thin envelopes
3 . Wet or damp envelopes
4 . Torn envelopes
5 . Envelopes which include the contents
6 . Non-standard size envelopes (ones with a special shape)
7 . Envelopes with eyelets or windows
8 . Sealed envelopes with paste or tape
9 . Partly-opened or perforated envelopes
10. Envelopes with special coating on the surface
11. Envelopes with glue or double-sided adhesive tape

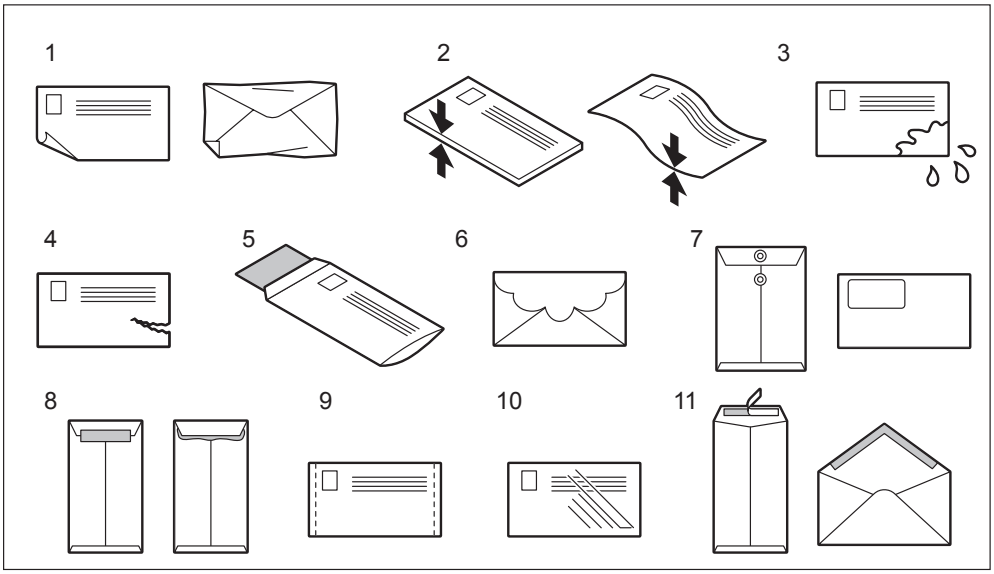

In addition, be aware of the following point for handling envelopes.

- Store envelopes at room temperature and away from heat and moisture.

Copying on an envelope

To copy on an envelope, perform the following procedure.

* The copied envelope exits into the inner tray regardless of the finisher (option).

1 Pick up about 5 envelopes, fan the envelopes well and align the edges.

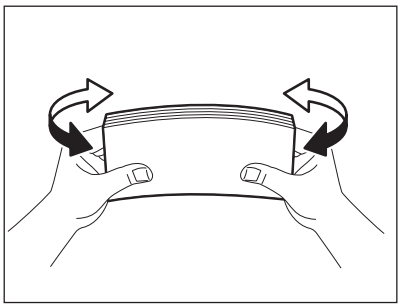

2 Place the envelopes on a flat clean surface and press them with your hands in the direction of the arrow to expel any air.

- Correct any bent corners on the envelopes.

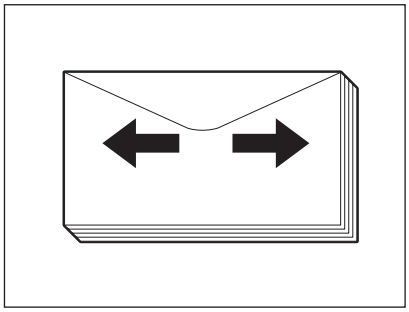

- Press them well to prevent the flap from rolling upward.

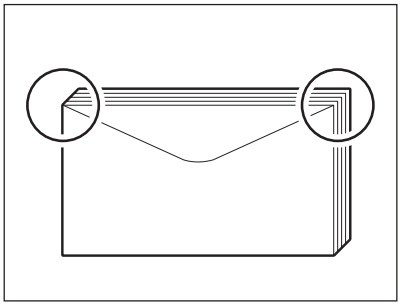

3 Place the envelopes on the bypass tray and align the guide to the envelope size.

- Place the envelope with the side to be copied face down and the flap to be front.

Note

Do not copy on the back of the envelope. This may cause a paper jam or soil the copied paper or the inside of the equipment.

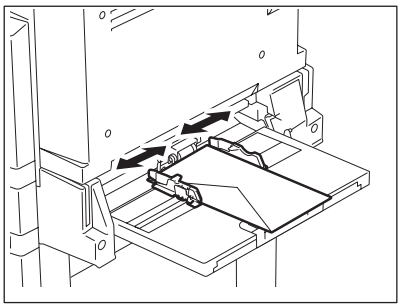

4 **Place the original on the original glass.**

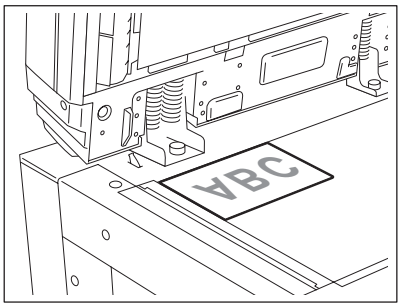

5 **Press the [OTHER SIZE] button.**

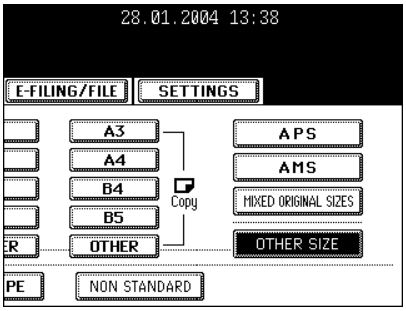

6 **Press the envelope size button corresponding to the envelope placed on the bypass tray.**

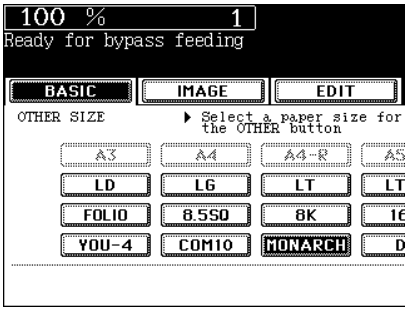

7 **Press the [MEDIA TYPE] button.**

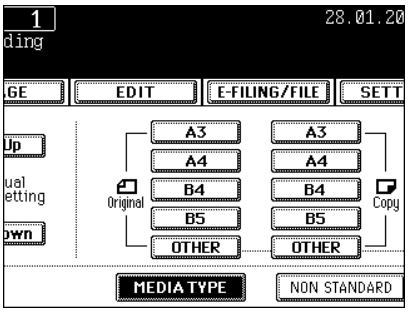

8 Press the [ENVELOPE] button to set the media type.

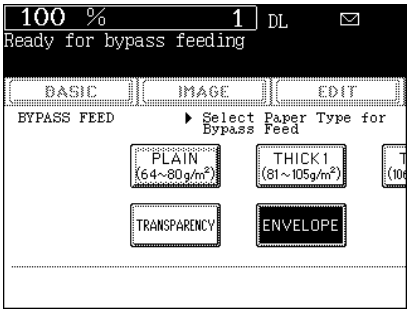

Note

When setting the envelope size in step 6 and media type in step 8, make sure that they correspond to the specifications of the envelope used. If not, it may cause a paper jam or soil the copied paper or the inside of the equipment.

9 Press the [START] button.

- The envelope exits into the inner tray.
- Every 10 copies, take the envelopes out from the inner tray.

3. SETTING OF BASIC COPY MODES

3

1. PAPER SELECTION 74
   Automatic Paper Selection (APS) 74
   Manual Paper Selection 76
   Setting the [OTHER SIZE] button 77
   Setting the [MIXED ORIGINAL SIZE] 78
2. REDUCTION AND ENLARGEMENT COPYING 80
3. SELECTING FINISHING MODES 84
   Finishing Modes and Finishers (Optional) 84
   Sort/Group Copying 87
   Rotate Sort Mode 88
   Staple Sorting 89
   Magazine Sort & Saddle Stitch Mode (Booklet Mode) 91
   Hole Punch Mode (Optional) 94
4. DUPLEX COPYING 96
   For Making 1-sided, 2-sided and Book-type Copies 96
5. ORIGINAL MODE 102
6. COPY DENSITY ADJUSTMENT 103

Automatic Paper Selection (APS)

When you place regular-sized originals on the glass or in the reversing automatic document feeder (optional), the size of the originals is automatically detected, which helps the copier select paper that is the same size as the originals.

* Depending on the condition of the original, Automatic Paper Selection may not work correctly. In that case, select the paper size manually. "Manual Paper Selection" 📖 Page 76
* This mode can only be used for actual-size (100%) copying.
* Original sizes available for automatic detection "Acceptable Original Types and Sizes/Maximum Number of Sheets that can be Stored" 📖 Page 51

1 Place paper in the drawer(s).

- "4.SETTING COPY PAPER" 📖 Page 35

2 Place the original(s).

- "2.SETTING ORIGINALS" 📖 Page 51

3 Confirm that the automatic paper selection mode (default setting) is selected on the basic menu.

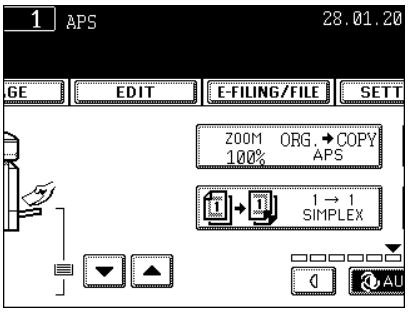

- If the automatic paper selection mode is not selected, press the [ZOOM...] button, and then press the [APS] button on the next screen.
- If “Change direction of original” and “CHANGE DRAWER TO CORRECT PAPER SIZE” appear, proceed as directed:

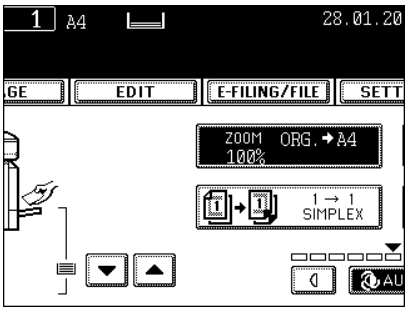

Tip

When the selected drawer size and the original size are the same, the copier rotates the original data by 90° and makes a copy which is the same size as the original --- even if those directions differ (e.g.an A4-size original is set while the same size paper is set in R direction).

- Select other copy modes as required.

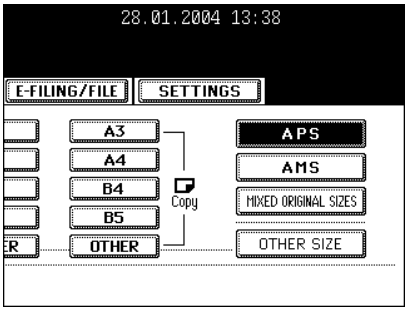

4 Press the [START] button.

Manual Paper Selection

Automatic Paper Selection cannot be used for highly transparent originals such as OHP films and tracing paper, wholly dark originals or originals with dark borders, or irregular sized originals such as newspapers and magazines. For these types of originals, use manual paper selection.

* When the desired size of paper is not set in any of the drawers, you can change the paper size of the drawer ("Changing the Paper Size of the Drawer/Setting the Drawer for Special Uses" 🕮 Page 38) or use the bypass copying ("Bypass Copying" 🕮 Page 61)

1 Place paper in the drawer(s).

- "4.SETTING COPY PAPER" 🕮 Page 35
- When using this mode in bypass copying "Bypass Copying" 🕮 Page 61, be sure to specify the paper size.

2 Place the original(s).

- "2.SETTING ORIGINALS" 🕮 Page 51

3 Press the drawer button representing the desired paper size or select the paper size with ▼ ▲ button.

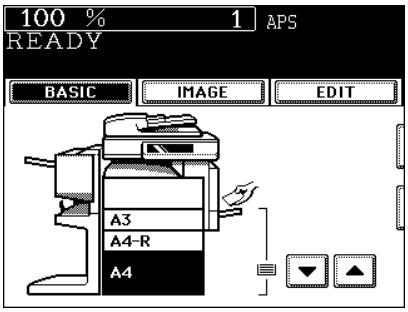

- Or press the [ZOOM...] button to enter the next screen, and press the button of the desired paper size.

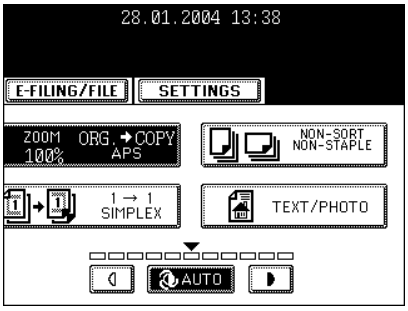

- "Setting the [OTHER SIZE] button" 🕮 Page 77

● Select other copy modes as required.

4 Press the [START] button.

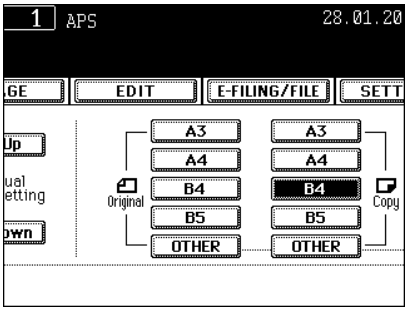

Setting the [OTHER SIZE] button

When the original or the paper size is specified and you want to use the paper size not displayed on the menu (except for non-standard size), press the [OTHER SIZE] button to select the size. This function allows the [OTHER] button to recognize the size you use.

- The initial setting for this button is COMP.

1 Press the [ZOOM...] button to enter the setting menu of the original or paper size, and then press the [OTHER SIZE] button.

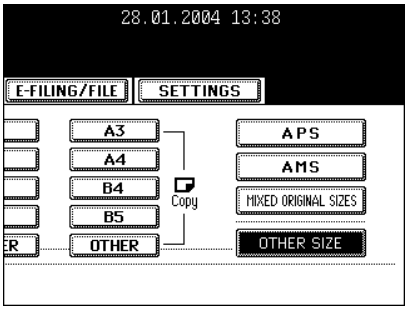

2 Press the [PAPER SIZE] button of the paper corresponding to the size that will be used.

- If you select 'LT', the [OTHER] button (for both the original and the paper size) is recognized as LT size.

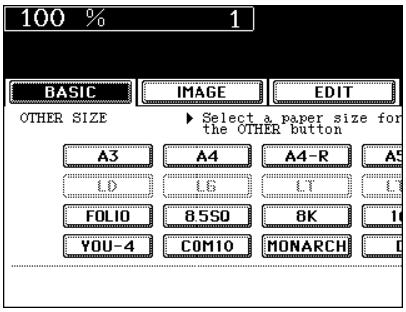

Setting the [MIXED ORIGINAL SIZE]

When placing different size originals on the reversing automatic document feeder, copy can be made by setting the [MIXED ORIGINAL SIZE].
Available combination of original size
- A3, A4, A4-R, B4, B5, FOLIO

* The copied image may be dislocated depending on the combination of the original size.

1 Place paper in the drawer(s).

- "4.SETTING COPY PAPER" 📖 Page 35
- Bypass copying is not available.

2 Adjust the tray guide to the widest original size, and then align the original against the front side.

- Place the originals with their face up.

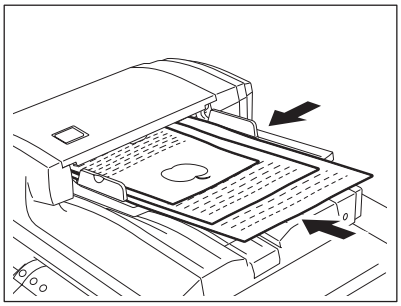

3 Press the [ZOOM...] button to enter the setting menu of the original or paper size.

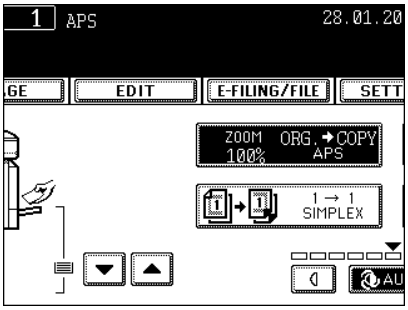

4 Press the [MIXED ORIGINAL SIZES] button.

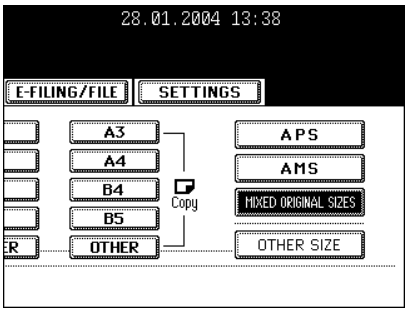

5 Select either the Automatic Paper Selection ("Automatic Paper Selection (APS)" 🕮 Page 74) or Automatic Magnification Selection mode ("Automatic Magnification Selection (AMS)" 🕮 Page 80)

- To make duplex copying, select the automatic magnification mode.
- You cannot enlarge the copy size from A4 (horizontal) to A3 (vertical), B5 (horizontal) to B4 (vertical).
- When using AMS with Mixed Original Sizes, a “Change direction of original” message may be displayed. If this message is displayed, proceed as directed.

● Select other copy modes as required.

6 Press the [START] button.

2. REDUCTION AND ENLARGEMENT COPYING

When placing originals on the original glass, you can copy them at the reducing and enlarging rate of 25 to 400%. For the reversing automatic document feeder (optional), you can make copy at the reducing and enlarging rate of 25 to 200%.

There are 3 ways of making copies in the Reduction and Enlargement mode:

- Using Automatic Magnification Selection (AMS)
- Specifying both original size and copy size separately
- Using the reduction/enlargement zoom buttons or the one-touch zoom buttons

3

* Automatic Magnification Selection cannot be used for highly transparent originals such as OHP films and tracing paper, wholly dark originals or originals with dark borders, or irregular sized originals such as newspapers and magazines. For these types of originals, use the other reduction/enlargement modes. Original sizes available for Automatic Magnification Selection (automatic detection) "Acceptable Original Types and Sizes/Maximum Number of Sheets that can be Stored" 📖 Page 51
* Set the paper size for the “OTHER” button as required ("Setting the [OTHER SIZE] button" 📖 Page 77). When the set originals or paper are a non-standard size other than A3, A4, B4 or B5, you will select the [OTHER] button on the screen of step 3 below. Before pressing it, you need to make the [OTHER] button recognize the same size as the originals or paper that have been set.

Automatic Magnification Selection (AMS)

1 Place paper in the drawer(s).

- "4.SETTING COPY PAPER" 📖 Page 35

2 Press the desired drawer (or ▼, ▲ button), and then press the [ZOOM] button.

- The copy paper size is selectable on the menu in step 3 as well.

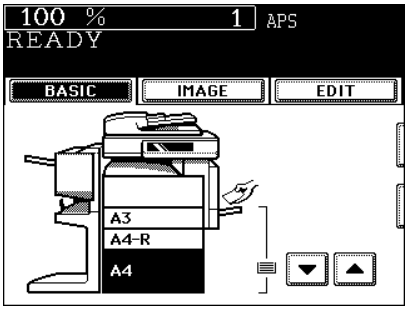

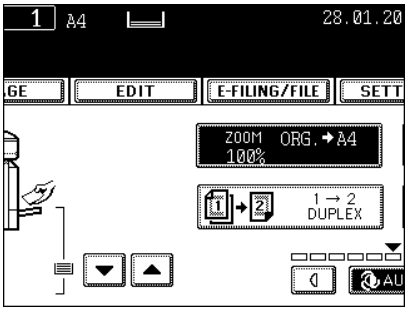

3 Press the [AMS] button.

- "Setting the [OTHER SIZE] button" 🕮 Page 77

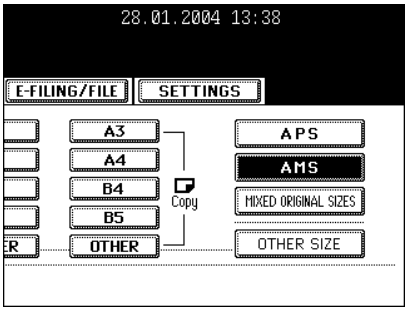

4 Place the original(s).

- "2.SETTING ORIGINALS" 🕮 Page 51
- The built-in sensors automatically detect the size of the original(s) and compute the reproduction ratio with the specified paper size respectively.
- If “Change direction of original” appear, proceed as directed:

● Select other copy modes as required.

5 Press the [START] button.

Specifying Both Original Size and Copy Size

1 Place paper in the drawer(s).

- "4.SETTING COPY PAPER" 🕮 Page 35

2 Place the original(s).

- "2.SETTING ORIGINALS" 🕮 Page 51

3 Press the desired drawer (or ▼, ▲ button), and then the [ZOOM] button.

- The copy paper size is selectable on the menu in step 4 as well.

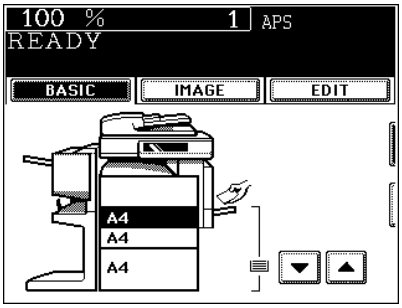

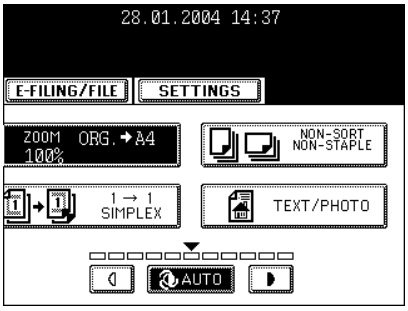

3

3

4 Press the [ORIGINAL SIZE] button that represents the size of the original.

- Using the original size and copy size, the correct reproduction ratio is computed and displayed on the screen.
- "Setting the [OTHER SIZE] button" 📖 Page 77

● Select other copy modes as required.

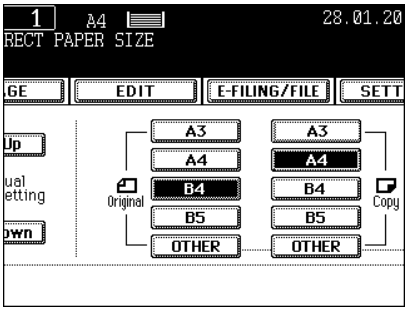

5 Press the [START] button.

Using the Reduction/Enlargement Zoom Buttons or One-touch Zoom Buttons

1 Place paper in the drawer(s).

- "4.SETTING COPY PAPER" 📖 Page 35

2 Place the original(s).

- "2.SETTING ORIGINALS" 📖 Page 51

3 Press the drawer button (or ▼, ▲ button) representing the desired copy paper size, and then press the [ZOOM] button.

- The copy paper size is selectable on the screen in step 4 as well.

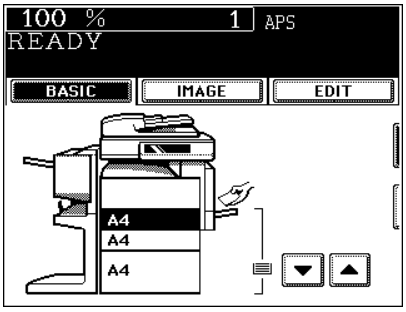

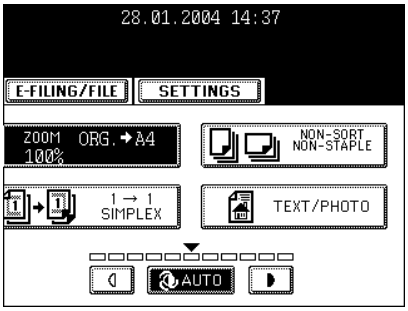

4 Press the [UP] (or [DOWN]) button to set the desired reproduction ratio.

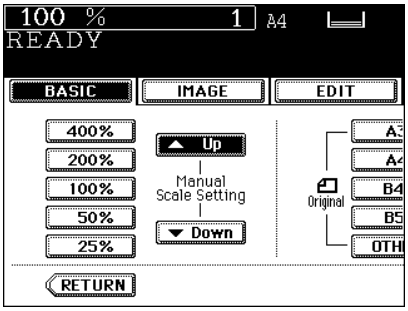

- Each time you press either button, the reproduction ratio changes by 1%. Holding down the button changes it continuously.
- You can select the reproduction ratio by pressing the [400%], [200%], [100%], [50%] or [25%] button directly. (When placing the originals on the reversing automatic document feeder (optional), you cannot select [400%] button.)
- "Setting the [OTHER SIZE] button" 📖 Page 77

● Select other copy modes as required.

5 Press the [START] button.

3. SELECTING FINISHING MODES

Finishing Modes and Finishers (Optional)

The functions available differ depending on whether a finisher is installed and which type of finisher (MJ-1022, MJ-1025, MJ-5004 and MJ-5005) it is.

* The touch panel used in this chapter appears when the optional saddle-stitch finisher (MJ-1025) with hole punch unit (MJ-6005) is installed in your copier.

3

Type of Finishing Mode

- MJ-1025: Saddle-stitch finisher
- MJ-1022: Single-staple finisher
- MJ-5004: Job separator
- MJ-5005: Offset tray
- MJ-6005: Hole punch unit

Confirm the finishing mode type of your equipment with the following table.

Y: Available
N: Not available

Finishing	Type of finishing mode						
	Sort/ Group	Rotate sort	Staple sort	Magazine sort	Magazine sort + Saddle stitch	Saddle stitch	Hole punch
MJ-1025 + MJ-6005	Y	Y	Y	Y	Y	Y	Y
MJ-1025	Y	Y	Y	Y	Y	Y	N
MJ-1022	Y	Y	Y	Y	N	N	N
MJ-5004	Y	Y	N	Y	N	N	N
MJ-5005	Y	Y	N	Y	N	N	N
No finisher	Y	Y	N	Y	N	N	N

Names of each Finisher (Optional)

1: Trays
2: Sub-trays
3: Upper cover
4: Hole punch unit (MJ-6005)
5: Front cover
6: Saddle stitch tray

MJ-1025

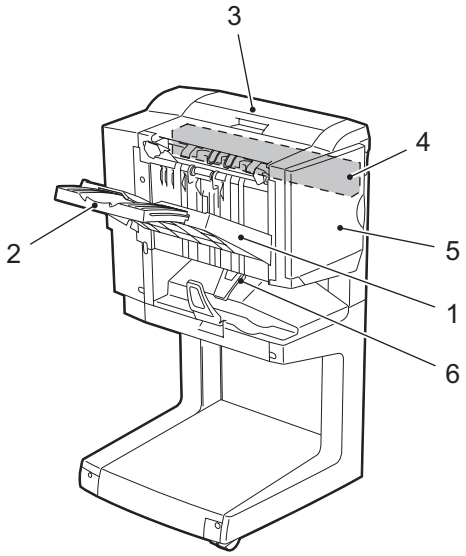

MJ-1022

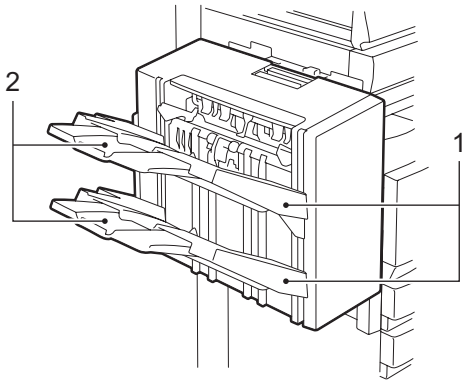

* When A3, B4 and LD paper are to be printed, pull out the sub-tray in advance. If the sub-tray is not used, the outputted paper falls out and becomes inconsistent.

Tip

When the finisher trays reach their maximum loading capacity ("2.SPECIFICATIONS OF OPTIONS" Page 297), “Remove paper from the finisher” appears.
Remove the copied paper from the trays and the copier automatically resumes making copies.

Names of each Inner Finisher (Optional)

1: Trays
2: Paper stopper

MJ-5004

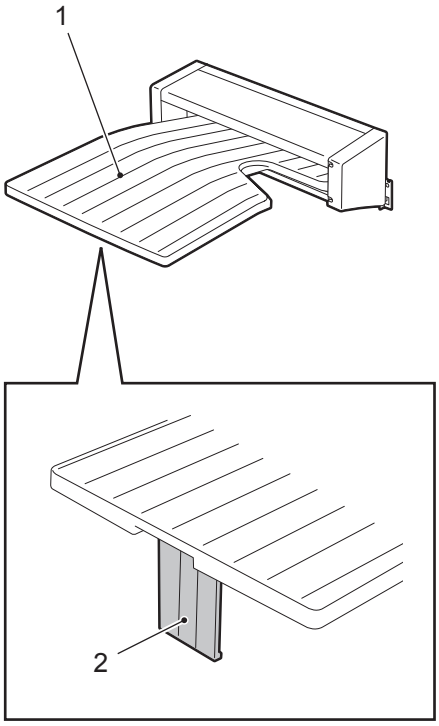

MJ-5005

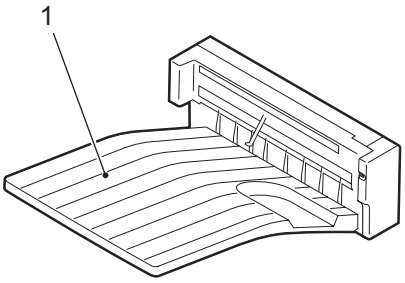

Tip

When the finisher trays reach their maximum loading capacity ("2.SPECIFICATIONS OF OPTIONS" Page 297), “Remove paper from the finisher” appears.
Remove the copied paper from the trays and the copier automatically resumes making copies.

Sort/Group Copying

To make multiple copies, you can select the sort mode or group mode as necessary.

- Example of making 5 sets of copies from 5-page originals
  1: Sort copying
  2: Group copying

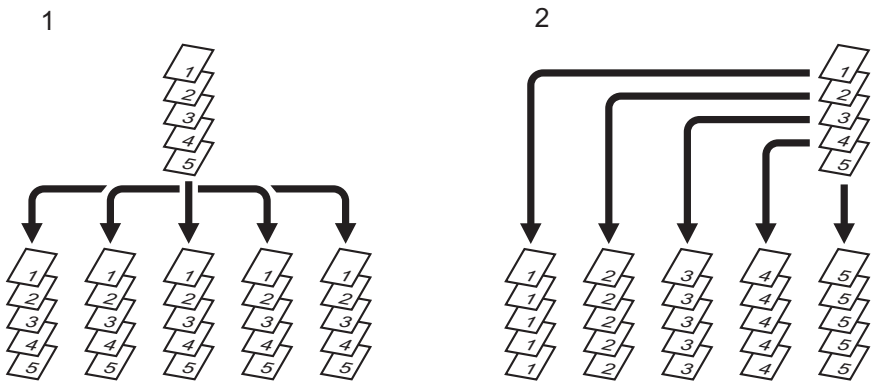

1 Place paper in the drawer(s).

- "4.SETTING COPY PAPER" 🕮 Page 35

2 Place the original(s).

- "2.SETTING ORIGINALS" 🕮 Page 51

3 Press the Finisher button on the basic menu as shown in the illustration on the right (highlighted).

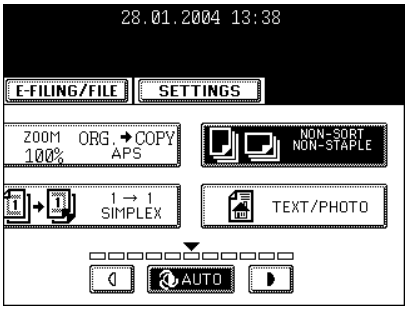

Tip

When originals are placed in the reversing automatic document feeder (optional), the sort mode is automatically selected.

4 Press the [SORT] (or [GROUP]) button.

- Select other copy modes as required.

5 Press the [START] button.

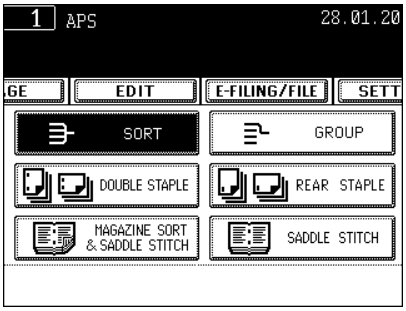

Rotate Sort Mode

In this copying mode, as sets of copies are output to the internal tray, the sets are alternated -lengthwise and crosswise- on top of each other. (Optional drawer or Stack Feeder Bypass is required.) A4/A4-R, B5/B5-R, LT/LT-R paper is available in this mode.

* This mode cannot be used in the Automatic Paper Selection mode.

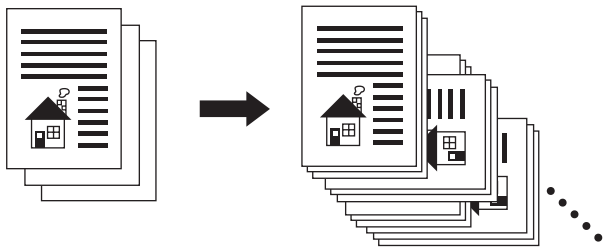

1 Place paper in the drawer(s).

- "4.SETTING COPY PAPER" 🕮 Page 35

2 Place the original(s).

- "2.SETTING ORIGINALS" 🕮 Page 51

3 Press the Finisher button on the basic menu as shown in the illustration on the right (highlighted).

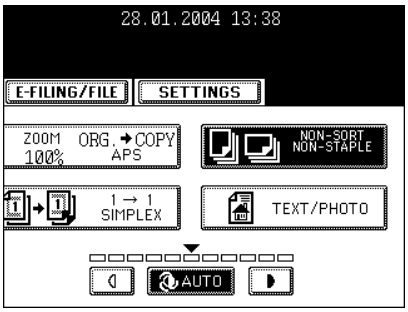

4 Press the [ROTATE SORT] button.

- Select other copy modes as required.

5 Press the [START] button.

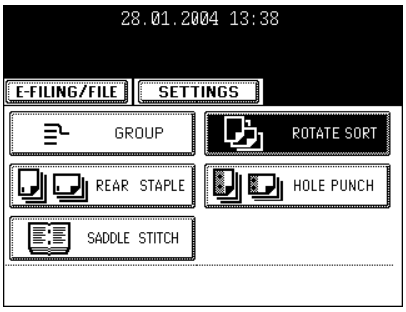

Staple Sorting

When the finisher (optional) is installed, you can perform automatic stapling for every set. 3 staple positions can be selected when installing the saddle-stitch finisher (MJ-1025).

* The paper weight should be in the range of 64-80 g/m^2 for the saddle-stitch finisher (MJ-1025) and 64-80 g/m^2 for the single-staple finisher (MJ-1022). Special paper such as OHP films or labels is excluded.
* Stapling will not work when copied paper of different widths are mixed.

- **Example of selecting the [FRONT STAPLE-1] button**

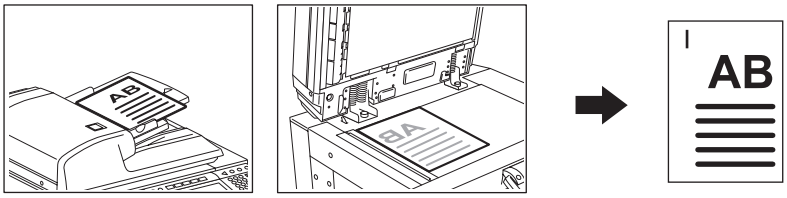

Setting Staple Sort Mode

1 Place paper in the drawer(s).

- "4.SETTING COPY PAPER" 🕮 Page 35
- When using this mode in bypass copying ("Bypass Copying" 🕮 Page 61), be sure to specify the paper size.

2 Place the original(s).

- "2.SETTING ORIGINALS" 🕮 Page 51

3 Press the Finisher button on the basic menu as shown in the illustration on the right (highlighted).

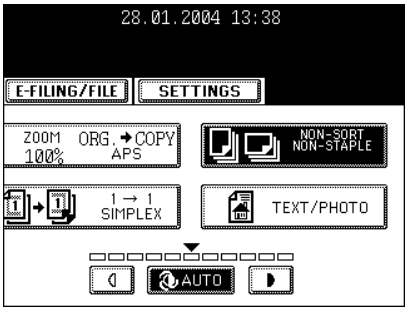

3

4 Press the [FRONT STAPLE-1] (or [DOUBLE STAPLE], [REAR STAPLE]) button.

- Only the [FRONT STAPLE-1] button is available when installing the single-staple finisher (MJ-1022).

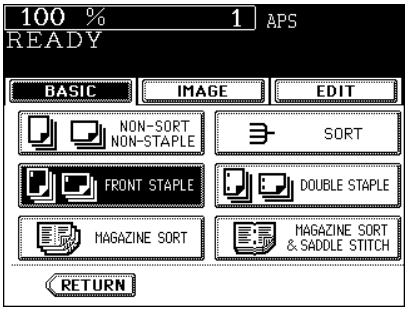

- Select other copy modes as required.

5 Press the [START] button.

Tip

If the paper quantity exceeds the maximum number of sheets that can be stapled, the finisher automatically enters the sort mode.

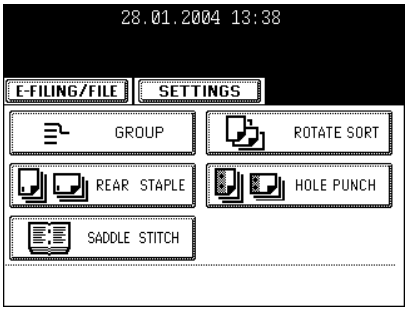

Maximum Number of Sheets that can be Stapled

- **Saddle-stitch finisher (MJ-1025)**

Paper size	Paper type (weight)
	Plain paper (64-80 g/m^2)
A4, A4-R, B5, LT, LT-R	50 sheets
A3, B4, FOLIO, LD, LG, FOLIO, COMP	25 sheets

- **Single-staple finisher (MJ-1022)**

Paper size	Paper type (weight)
	Plain paper (64-80 g/m^2)
A4, A4-R, B5, LT, LT-R	30 sheets
B4, LG	20 sheets
A3, FOLIO, LD, COMP	15 sheets

* Tray load capacity "2.SPECIFICATIONS OF OPTIONS" 📖 Page 297

Magazine Sort & Saddle Stitch Mode (Booklet Mode)

When the Magazine Sort mode is selected, 1-sided originals can be copied and bound like magazines or booklets. When the Saddle-stitch finisher (optional, MJ-1025) is installed, you can select the saddle stitch mode that will automatically fold and staple the centre of the document. A3, A4-R, B4, LD and LT-R are available.

* When A3 and A4 paper are to be printed, pull out the sub-tray in advance. If the sub-tray is not used, the outputted paper falls out and becomes inconsistent.
* Special paper such as OHP films or labels is excluded.
* The paper weight should be in the range of 64-80 g/m^2.

- When [MAGAZINE SORT] is selected

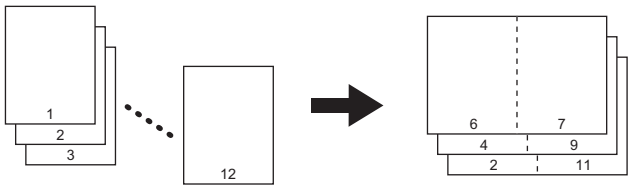

- When [MAGAZINE SORT & SADDLE STITCH] is selected

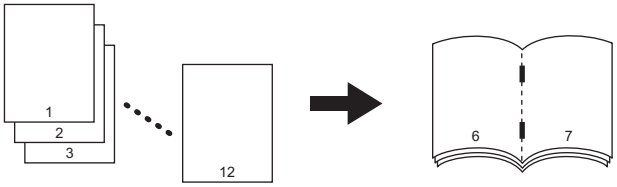

- When [SADDLE STITCH] is selected

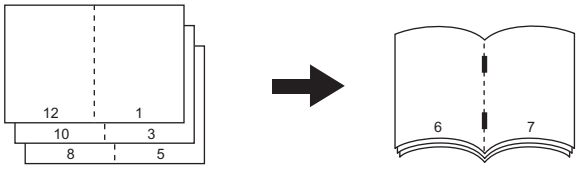

* You can also select the Magazine Sort mode from the edit menu. "6.MAGAZINE SORT (FROM THE EDITING MENU)" 📖 Page 119
* When placing the portrait original in short edge feed direction in the reversing automatic document feeder, copies can be made correctly with Image Direction setting. See "14.DIRECTION OF COPY IMAGES IN “1 TO 2” AND “2 TO 1”" 📖 Page 138.

Setting Magazine Sort & Saddle Stitch Mode

1 Place paper in the drawer(s).

- "4.SETTING COPY PAPER" 🕮 Page 35

2 Set the paper size.

- For drawer feeding "Manual Paper Selection" 🕮 Page 76, step 3
- For bypass feeding "Bypass Copying on Standard Size Paper" 🕮 Page 62, step 4

3 Place the original(s).

- "2.SETTING ORIGINALS" 🕮 Page 51
- When placing originals in the reversing automatic document feeder (optional), set them by referring to the order of previous pages in the illustrations.
- When placing them on the glass, place the first page of the originals first if the [MAGAZINE SORT] or the [MAGAZINE SORT & SADDLE STITCH] is selected. If the [SADDLE STITCH] is selected, set them in the order of pages 12-1, (2-11), 10-3 (4-9), then 8-5, (6-7) by referring to the illustration above as an example.

4 Press the Finisher button on the basic menu as shown in the illustration on the right (highlighted).

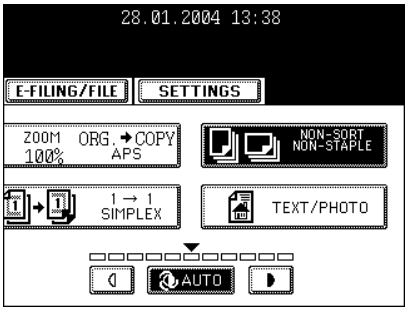

5 Press the [MAGAZINE SORT] (or [MAGAZINE SORT & SADDLE STITCH] or [SADDLE STITCH]) button.

- Select other copy modes as required.

6 Press the [START] button.

- When placing original(s) on the glass, follow steps 5 to 6 on page "When Coming Across the Situations below" 🕮 Page 50.

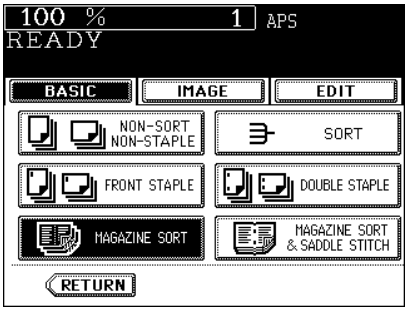

Available Conditions for Saddle Stitch

- A cover of 64-80 g/m^2 can be added. In this case, the cover is included in the maximum capacity for saddle stitch.
- When paper of different weights is loaded, the maximum number of sheets that can be stapled is that of the paper with the highest weight.

Paper size	Paper weight	Maximum capacity for saddle stitch	Tray load capacity
A3, A4-R, B4, LD, LT-R	Plain paper 60-80 g/m^2	10 sheets	Copying of 6-10 sheets: 10 sets Copying of 2-5 sheets: 20 sets

Hole Punch Mode (Optional)

When the optional hole punch unit is attached to the finisher (Optional: MJ-1025), you can hole punch your copies.

* The paper weight should be in the range of 64-200 g/m^2. Special paper such as OHP files or labels is excluded.

1 Place paper in the drawer(s).

- "4.SETTING COPY PAPER" 🕮 Page 35
- When using this mode in bypass copying ("Bypass Copying" 🕮 Page 61), be sure to specify the paper size.

2 Place the original(s).

- "2.SETTING ORIGINALS" 🕮 Page 51

3 Press the Finisher button on the basic menu as shown in the illustration on the right (highlighted).

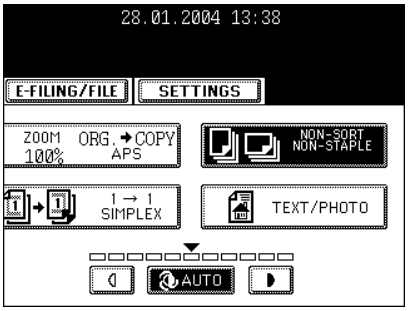

4 Press the [HOLE PUNCH] button.

- Select other copy modes as required.

5 Press the [START] button.

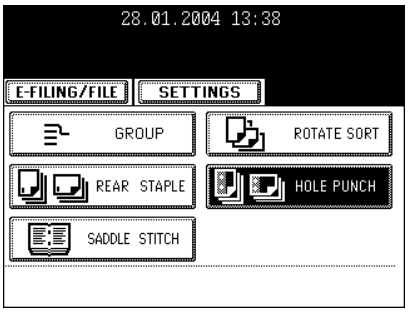

Tip

Available paper sizes for the hole punch:
Since the number of punch holes and the distance between the holes vary depending on the country, purchase a hole punch unit that meets your requirements. (For details, consult your service technician.)

	Number of punch holes and hole diameter	Available paper sizes
Japan and most of Europe (MJ-6005)	2 holes (6.5 mm dia.)	A3, A4, A4-R, B4, B5, B5-R, FOLIO, LD, LG, LT, LT-R, COMP
France (MJ-6005E)	4 holes (6.5 mm dia.: 80 mm pitch)	A3, A4
Sweden (MJ-6005S)	4 holes (6.5 mm dia.: 70.21 mm pitch)	A3, A4, A4-R, B4, B5, B5-R, FOLIO, LD, LG, LT, LT-R, COMP

* The paper mentioned above is Toshiba-recommended paper. Specifications and appearance are subject to change without notice in the interest of product improvement

4. DUPLEX COPYING

For Making 1-sided, 2-sided and Book-type Copies

This function allows you to set the type of originals (1-sided, 2-sided or book-type) and the desired type of copying (1-sided or 2-sided). Duplex copying is available for the plain paper (64-80 g/m^2) and thick 1 paper (81-105 g/m^2).

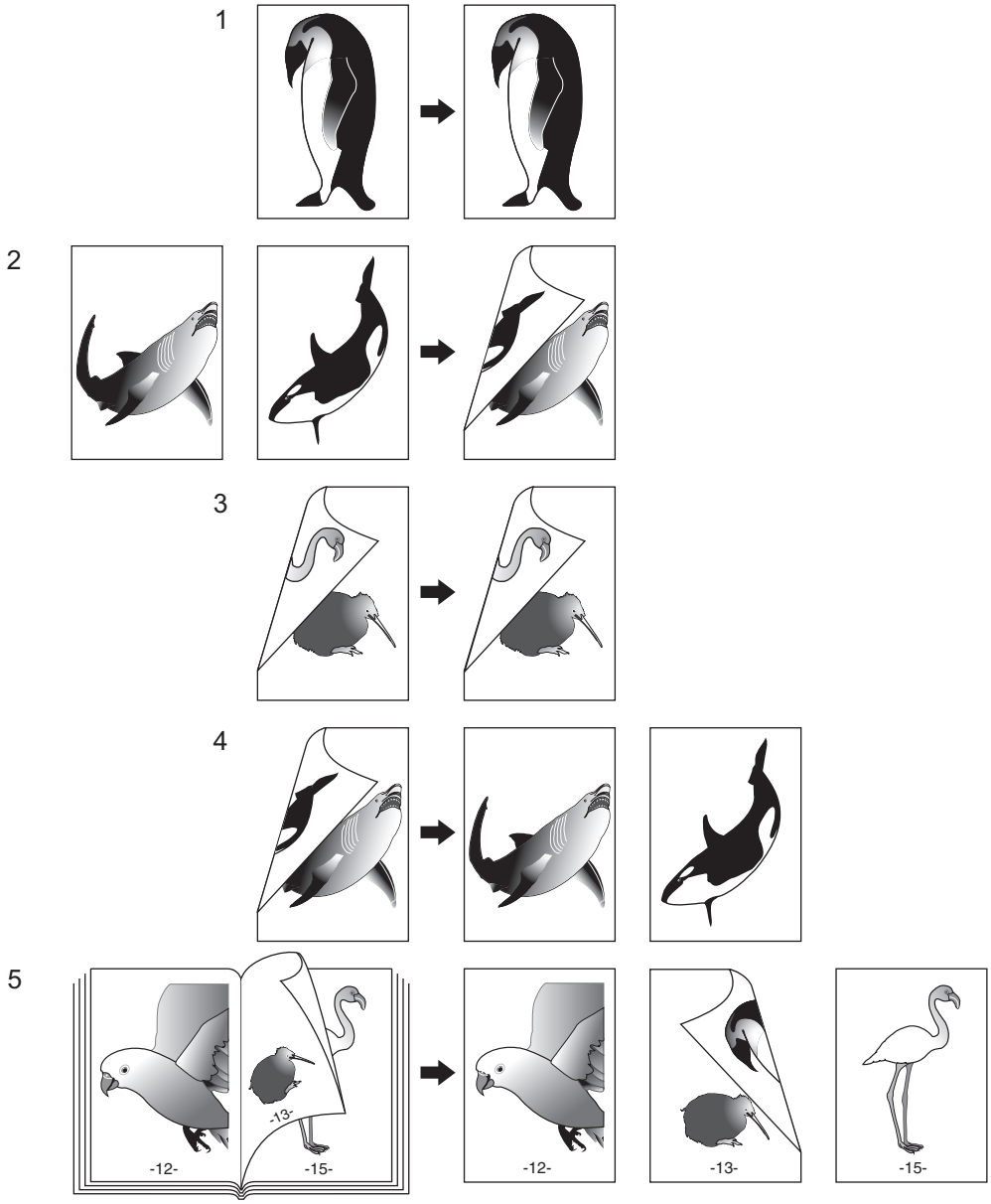

1. 1-Sided Originals -> 1-Sided Copies (default setting)

1 Place paper in the drawer(s).

- "4.SETTING COPY PAPER" 🕮 Page 35

2 Place the original(s).

- "2.SETTING ORIGINALS" 🕮 Page 51

3 Confirm that the [1 → 1 SIMPLEX] mode is selected in the basic menu.

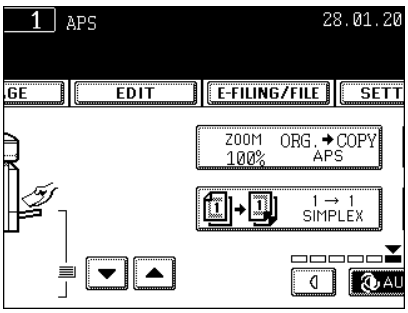

- If the "1-SIDED → 1-SIDED" mode is not selected, press the button (highlighted) in the menu on the right, and then press the [1 → 1 SIMPLEX] button on the next screen.

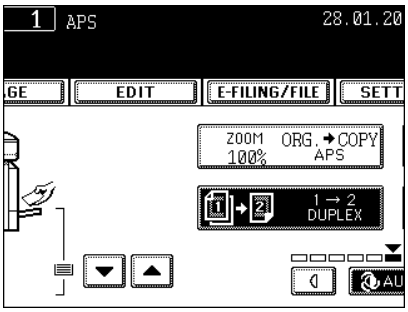

- ● Select other copy modes as required.

4 Press the [START] button.

2. 1-Sided Originals -> 2-Sided Copies

The use of Image Direction will create the booklet output when copying landscape oriented originals. See "14.DIRECTION OF COPY IMAGES IN "1 TO 2" AND "2 TO 1"" 🕮 Page 138 for details.

1 Place paper in the drawer(s).

- "4.SETTING COPY PAPER" 🕮 Page 35
- When using this mode in bypass copying ("Bypass Copying" 🕮 Page 61), be sure to specify the paper size.

2 Place the original(s).

- "2.SETTING ORIGINALS" 🕮 Page 51

3

3 **On the basic menu, press the highlighted button on the right.**

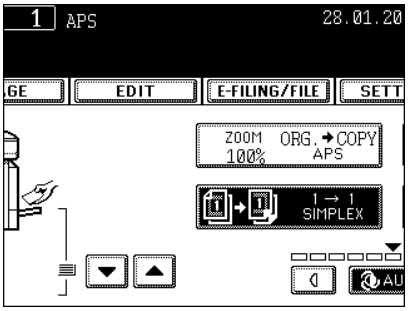

4 **Press the [1 → 2 DUPLEX] button.**

- Select other copy modes as required.

5 **Press the [START] button.**

- When placing an original on the glass, follow step 5 to 6 on page "Copying Procedure" 🕮 Page 48 continuously.

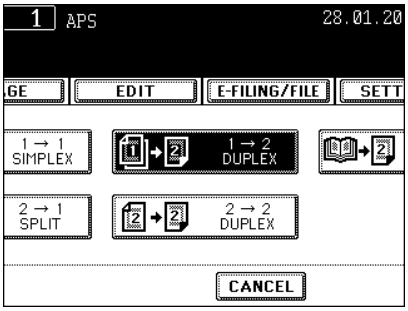

3. 2-Sided Originals -> 2-Sided Copies

1 **Place paper in the drawer(s).**

- "4.SETTING COPY PAPER" 🕮 Page 35
- When using this mode in bypass copying ("Bypass Copying" 🕮 Page 61), be sure to specify the paper size.

2 **Place the original(s).**

- "2.SETTING ORIGINALS" 🕮 Page 51

3 **On the basic menu, press the highlighted button on the right.**

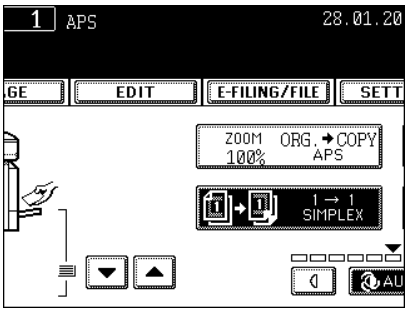

4 Press the [2 → 2 DUPLEX] button.

- Select other copy modes as required.

5 Press the [START] button.

- When placing an original on the glass, follow step 5 to 6 on page "Copying Procedure" 🕮 Page 48 continuously.

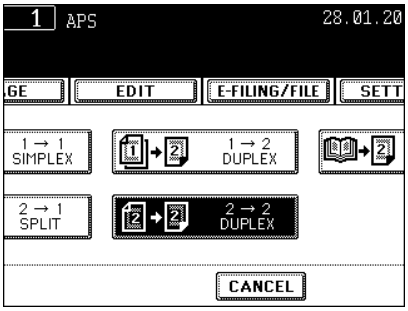

4. 2-Sided Originals -> 1-Sided Copies

Image Direction can be used if the orientation of the output is alternating between pages when using landscape originals. See "14.DIRECTION OF COPY IMAGES IN “1 TO 2” AND “2 TO 1”" 🕮 Page 138 for details.

1 Place paper in the drawer(s).

- "4.SETTING COPY PAPER" 🕮 Page 35

2 Place the original(s).

- "2.SETTING ORIGINALS" 🕮 Page 51

3 On the basic menu, press the highlighted button on the right.

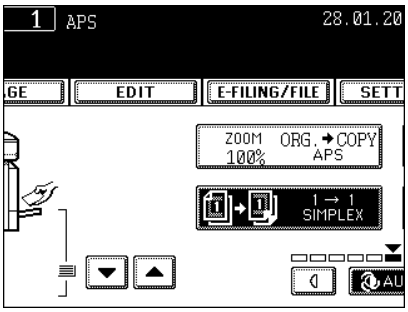

4 Press the [2 → 1 SPLIT] button.

- Select other copy modes as required.

5 Press the [START] button.

- When placing the original on the glass, copy the one side of the original and turn it over to copy the other side.

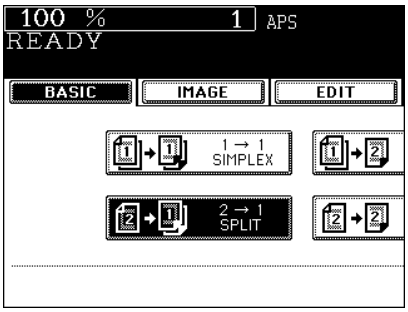

5. Book-type Originals to 2-Sided Copies

* Acceptable paper size for this function are A4 or B5 only.

1 Place paper in the drawer(s).

- "4.SETTING COPY PAPER" 🕮 Page 35
- When using this mode in bypass copying ("Bypass Copying" 🕮 Page 61), be sure to specify the paper size.

2 On the basic menu, press the highlighted button on the right.

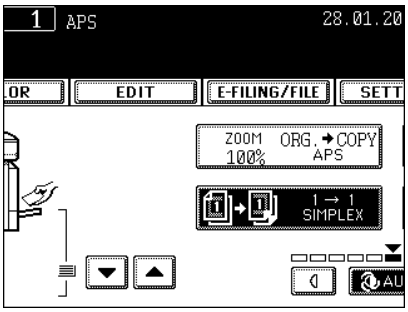

3 Press the [BOOK → 2] button.

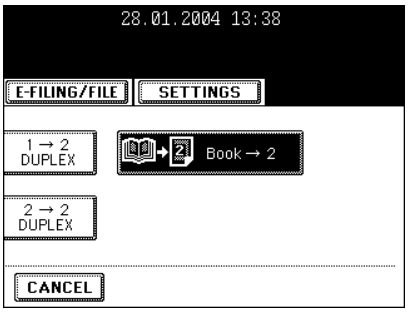

4 Select the book copying type.

- Press the [RIGHT → RIGHT] button if copying should start at a right-hand page and end at a right-hand page and also choose from among the [RIGHT → LEFT], [LEFT → LEFT] and [LEFT → RIGHT] buttons as well.

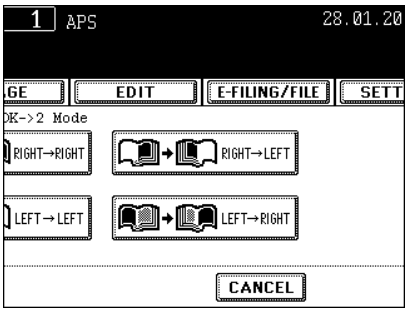

5 Select A4 or B5 copy size.

6 If you need a binding space, select the book margin mode from the Image Shift function ("Creating a Bookbinding Margin" 🕮 Page 111).

- Select other copy modes as required.

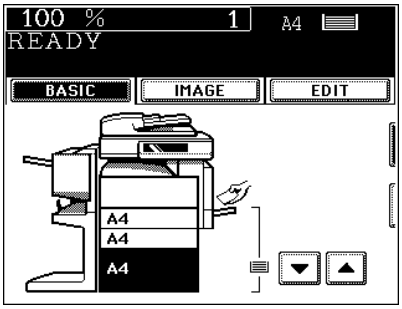

7 Place the first page(s) on the glass, and then press the [START] button.

- If you do not copy your originals from the first page, the copies will not be arranged in the same order as the original.
- Centre the book on the yellow indicator line with its bottom toward you. "Book-type Originals" 🕮 Page 53

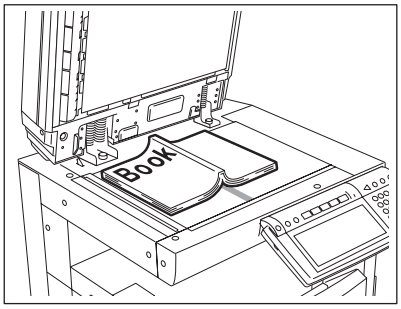

8 Turn to the next page, set the book again and press the [START] button.

- Pressing the [YES] button and then the [START] button also continues copying.
- Repeat the procedure above until all the originals have been scanned.

9 After all the originals are scanned, press the [FINISHED] button.

- Press the [COPY FINAL PAGE] button if the last original has only one page.

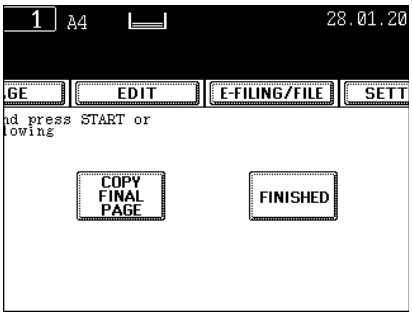

3

5. ORIGINAL MODE

By selecting an original mode according to the type of your originals, you can make copies with the suitable image.

3

1 Place paper in the drawer(s).

- "4.SETTING COPY PAPER" 🕮 Page 35

2 Place the original(s).

- "2.SETTING ORIGINALS" 🕮 Page 51

3 On the basic menu, press the highlighted button on the right.

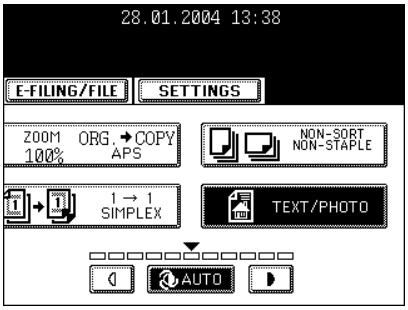

4 According to the type of your original, choose the most suitable image type mode by pressing one of the following buttons:

- [TEXT/PHOTO]: Original with text and printed image mixed (default setting)
- [TEXT]: Original with text only (or text and line artwork)
- [PHOTO]: Original with photos printed on photographic paper

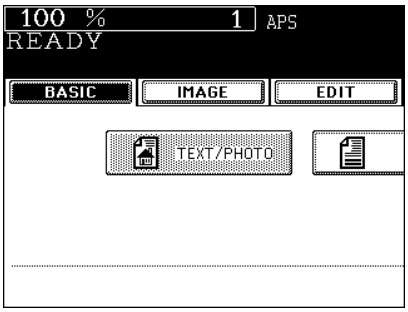

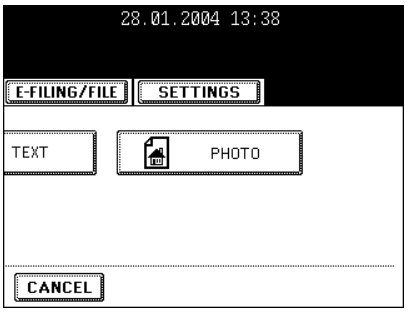

6. COPY DENSITY ADJUSTMENT

There are 2 types of image density adjustments: automatic mode and manual mode.
In the automatic mode, the density of each original is detected automatically and the optimum image density is selected. In the manual mode, you can select the desired level of image density. Adjust the density with this mode depending on the original condition.

Automatic Copy Density Modes

1 Place paper in the drawer(s).

- "4.SETTING COPY PAPER" 🕮 Page 35

2 Place the original(s).

- "2.SETTING ORIGINALS" 🕮 Page 51

3 Press the [AUTO] button.

- Select other copy modes as required.

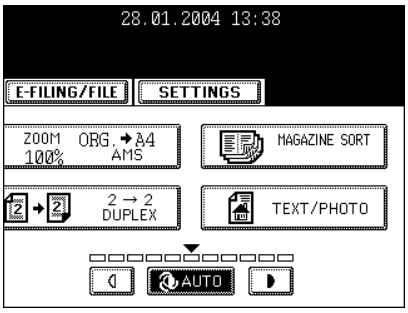

4 Press the [START] button.

Manual Copy Density Mode

1 Place paper in the drawer(s).

- "4.SETTING COPY PAPER" 🕮 Page 35

2 Place the original(s).

- "2.SETTING ORIGINALS" 🕮 Page 51

3 Press either the ◁ or ▷ button to adjust the copy density to the desired level.

- Each time you press either the ◁ or ▷ button, your copies will become lighter or darker respectively.

- Select other copy modes as required.

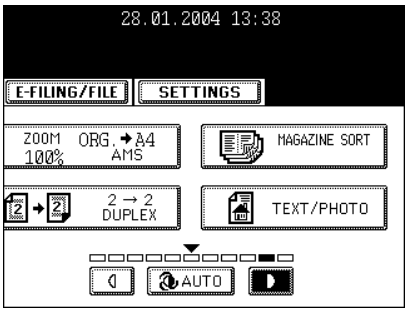

4 Press the [START] button.

4. IMAGE EDITING AND IMAGE ADJUSTMENT

1. BACKGROUND ADJUSTMENT 106
2. SHARPNESS ADJUSTMENT 107

1. BACKGROUND ADJUSTMENT

This function allows you to adjust the density of the original's background or to avoid copying the back side of originals.

1 Place paper in the drawer(s).

- "4.SETTING COPY PAPER" 🕮 Page 35

2 Place the original(s).

- "2.SETTING ORIGINALS" 🕮 Page 51

4

3 Press the [IMAGE] button to enter the image menu, and then press the [BACKGROUND ADJUSTMENT] button.

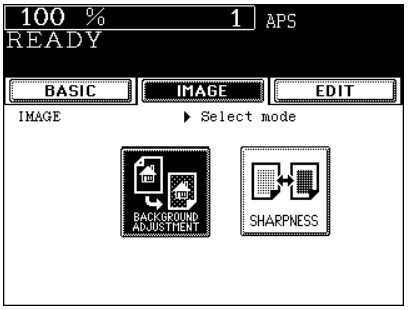

4 Press the [LIGHT] (or [DARK]) button to adjust the density.

5 Press the [ENTER] button.

- Select other copy modes as required.

6 Press the [START] button.

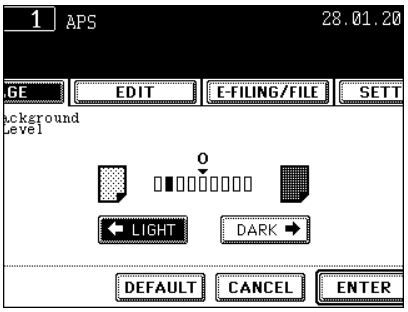

Tip

Canceling the Background Adjustment

There are 2 ways for clearing the setting.

- Press the [LIGHT] or [DARK] button on the Background column to move the indicator to 0, and then press the [ENTER] button.
- Press the [DEFAULT] button, and then press the [ENTER] button.

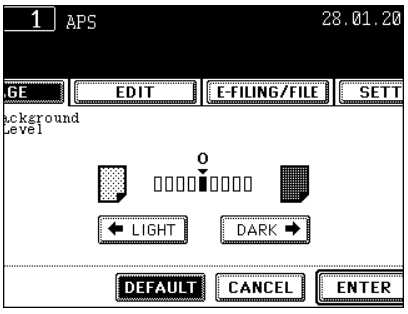

2. SHARPNESS ADJUSTMENT

This function allows you to emphasize the letters and edges of images.

1 Place paper in the drawer(s).

- "4.SETTING COPY PAPER" 🕮 Page 35

2 Place the original(s).

- "2.SETTING ORIGINALS" 🕮 Page 51

3 Press the [IMAGE] button to enter the image menu, and then press the [SHARPNESS] button.

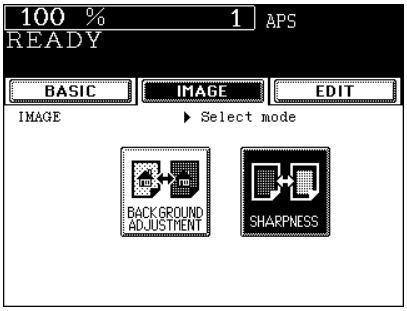

4 Press the [SOFT] (or [SHARP]) button.

- Pressing the [SOFT] button suppresses the moire fringe, while pressing the [SHARP] button emphasizes the letters and sharpens the fine lines.

5 Press the [ENTER] button.

- Select other copy modes as required.

6 Press the [START] button.

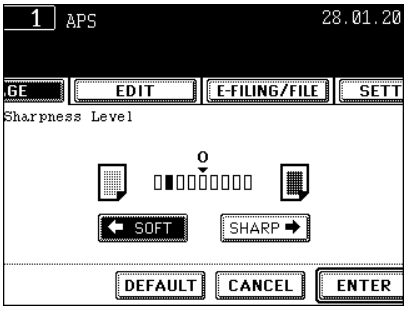

Tip

Canceling the Sharpness Adjustment

There are 2 ways for clearing the setting.

- Press the [SOFT] or [SHARP] button on the Sharpness column to move the indicator to 0, and then press the [ENTER] button.
- Press the [DEFAULT] button, and then press the [ENTER] button.

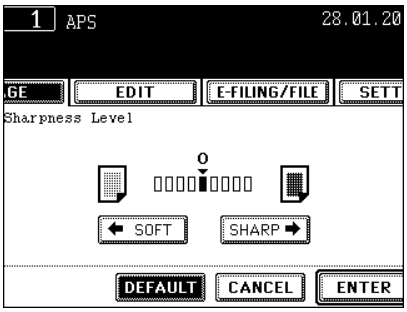

5. USING THE EDITING FUNCTIONS

1. IMAGE SHIFT 110
2. EDGE ERASE 113
3. BOOK CENTRE ERASE 114
4. DUAL-PAGE 115
5. 2 IN 1/4 IN 1 117
6. MAGAZINE SORT (FROM THE EDITING MENU) 119
7. IMAGE EDITING 121
   Trimming/Masking 121
   Mirror Image 123
   Negative/Positive Reversal 124
8. X-Y ZOOM 125
9. COVER COPYING 126
10. SHEET INSERTION MODE 129
11. TIME & DATE STAMP 131
12. PAGE NUMBERING 132
13. JOB BUILD 134
14. DIRECTION OF COPY IMAGES IN “1 TO 2” AND “2 TO 1” 138
15. DIRECTION OF DUPLEX COPY IMAGES IN “2 TO 2” 140
16. CONTINUOUS/SINGLE ORIGINAL FEEDING 141

1. IMAGE SHIFT

A margin for binding is created by shifting the original image to either the right or left side. You can also create binding margins in the centre (inner margin) when using Book-Type Originals to 2-sided copies (see "5. Book-type Originals to 2-Sided Copies" 🕮 Page 100).

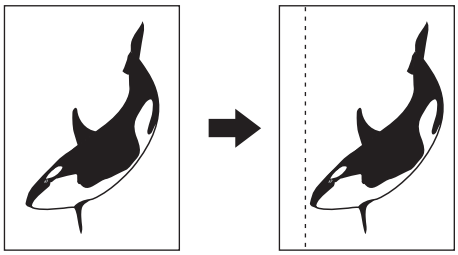

5

Creating a Right or Left Margin

1 Place paper in the drawer(s).

- "4.SETTING COPY PAPER" 🕮 Page 35
- When using this mode in bypass copying ("Bypass Copying" 🕮 Page 61), be sure to specify the paper size.

2 Place the original(s).

- "2.SETTING ORIGINALS" 🕮 Page 51

3 Press the [EDIT] button to enter the edit menu, and then press the [IMAGE SHIFT] button.

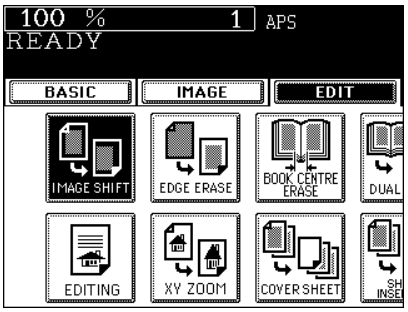

4 Press the [LEFT] (or [RIGHT]) button according to your desired binding side.

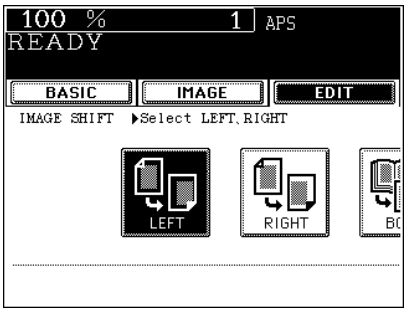

5 Adjust the width of binding margin, and then press the [ENTER] button.

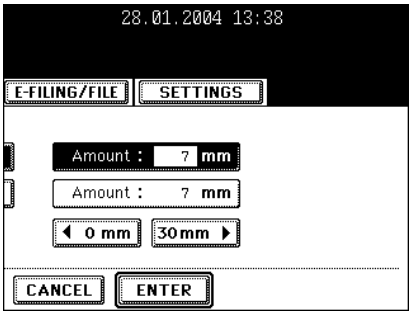

- The default width of the margin is 7 mm.
- To adjust the width, press the [0 mm] or [30 mm] button to select the desired number, and then press the [ENTER] button.
- In duplex copying, margins on the back are created on the other side of those in the front.
  "4.DUPLEX COPYING" 🕮 Page 96

● Select other copy modes as required.

6 Press the [START] button.

Creating a Bookbinding Margin

When Book Margin is selected, use it in conjunction with the Duplex Copying mode from book-type originals ("5. Book-type Originals to 2-Sided Copies" 🕮 Page 100).
Acceptable paper sizes for this function are A4, B5 and LT only.

1 Press the [EDIT] button to enter the edit menu, and then press the [IMAGE SHIFT] button.

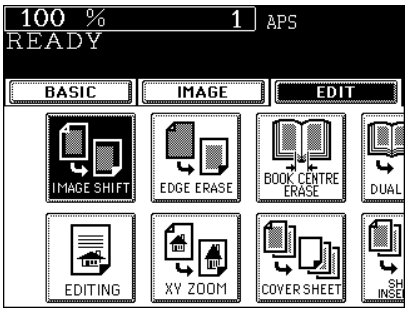

2 Press the [BOOK] button.

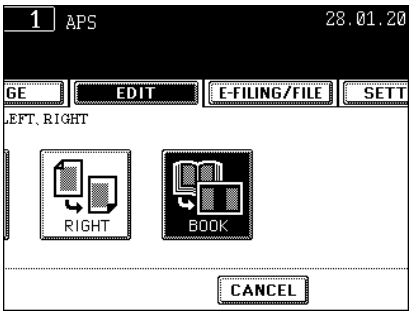

3 Adjust the width of the margin, and then press the [ENTER] button.

- The default width of the margin is 7 mm (Book binding margin is 14 mm.).
- To adjust the width, press the [2 mm] or [30 mm] button to select the desired number, and then press the [ENTER] button.

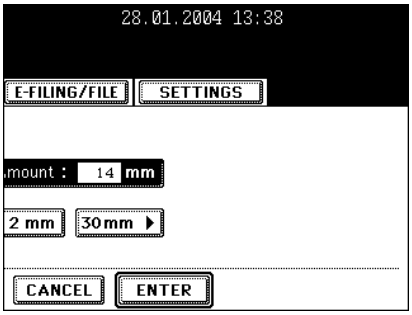

2. EDGE ERASE

If your original has a dirty or torn edge, it may be reproduced as a black stain on the copy. In that case, use Edge Erase Copying. A white border is created along the edges of the copy, eliminating those black stains.

* This function is available in only case of the standard-size original.

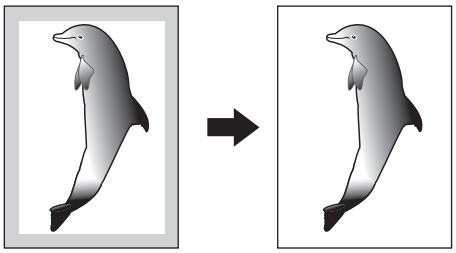

5

1 Place paper in the drawer(s).

- "4.SETTING COPY PAPER" 🕮 Page 35
- When using this mode in bypass copying ("Bypass Copying" 🕮 Page 61), be sure to specify the paper size.

2 Place the original(s).

- "2.SETTING ORIGINALS" 🕮 Page 51

3 Press the [EDIT] button to enter the edit menu, and then press the [EDGE ERASE] button.

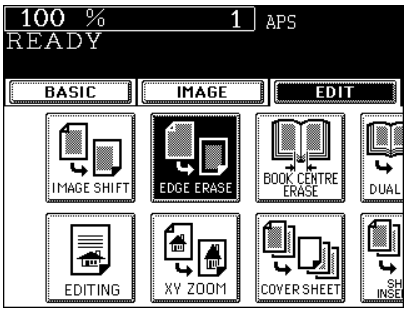

4 Adjust the width of the white border, and then press the [ENTER] button.

- The default width of the white border is 5 mm.
- To adjust the width, press the [5 mm] or [20 mm] button to select the desired number, and then press the [ENTER] button.

● Select other copy modes as required.

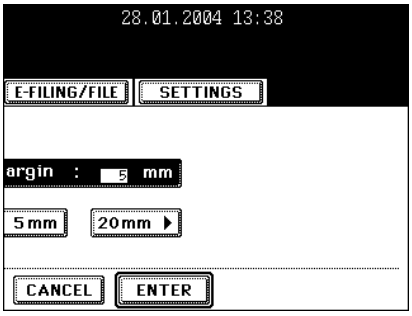

5 Press the [START] button.

3. BOOK CENTRE ERASE

This feature allows you to erase the shadow in the centre of a book original.

1: Before

2: After the book centre has been erased

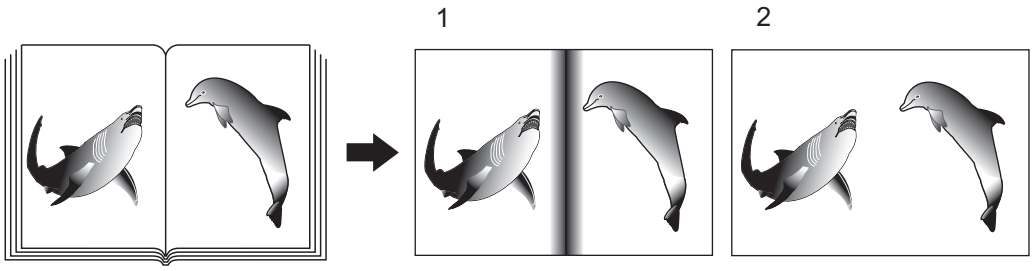

5

1 Place paper in the drawer(s).

- "4.SETTING COPY PAPER" 🕮 Page 35
- When using this mode in bypass copying ("Bypass Copying" 🕮 Page 61), be sure to specify the paper size.

2 Place the original(s).

- "2.SETTING ORIGINALS" 🕮 Page 51

3 Press the [EDIT] button to enter the edit menu, and then press the [BOOK CENTRE ERASE] button.

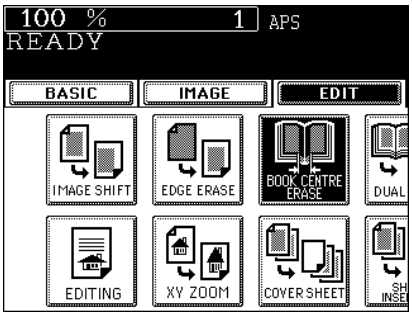

4 Adjust the width of the book centre erase margin, and then press the [ENTER] button.

- The default width of the book centre erase margin is 10 mm.
- To adjust the width, press the [2 mm] or [50 mm] button to select the desired number, and then press the [ENTER] button.

● Select other copy modes as required.

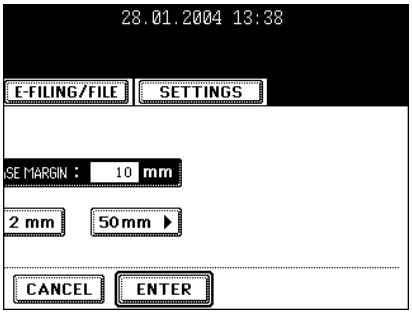

5 Press the [START] button.

4. DUAL-PAGE

Utilizing this feature allows the facing pages of a book or magazine to be copied page by page onto 2 separate sheets of paper or duplex-copied on one sheet. There is no need to move the original on the glass. You can also place a pair of A4 (or B5, LT) sized originals side by side and copy them on separate sheets of paper.

* Acceptable paper sizes for this function are A4, B5 and LT only.

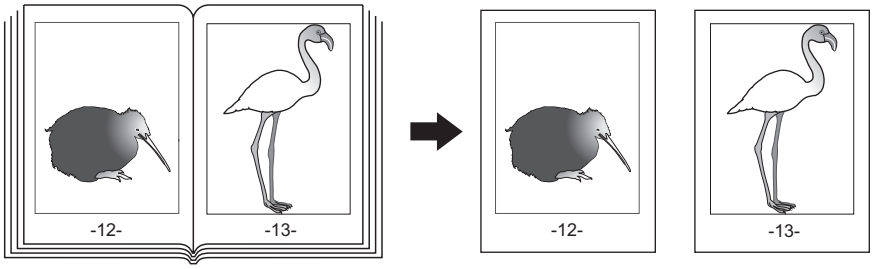

1 Place paper in the drawer(s).

- "4.SETTING COPY PAPER" 🕮 Page 35
- When using this mode in bypass copying ("Bypass Copying" 🕮 Page 61), be sure to specify the paper size.

2 Press the [EDIT] button to enter the edit menu, and then press the [DUAL PAGE] button.

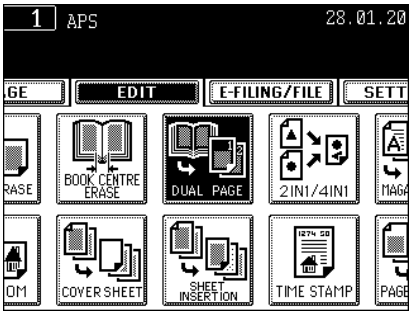

3 Press the [1 SIDE] (or [2 SIDE]) button.

- Select the [1 SIDE] button to make copies of the facing pages on 2 separate sheets of paper page by page. Select the [2 SIDE] button to make duplex copies of them on one sheet.

4 If you need a binding margin, set the right or left margin.

- "Creating a Right or Left Margin" 🕮 Page 110

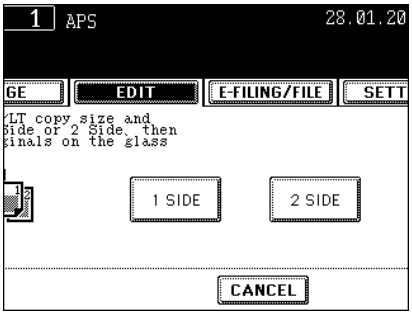

5 Press the [BASIC] button to enter the basic menu, and then select A4 (or B5, LT) copy size.

- Select other copy modes as required.

6 Place the first page(s) to be copied on the glass, and then press the [START] button.

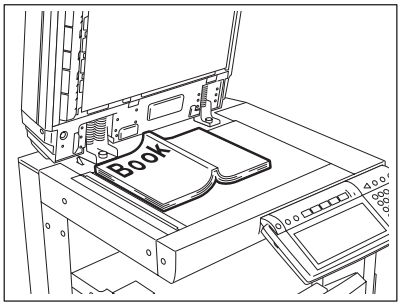

- If you do not copy your originals from the first page, the copies will not be arranged in the same order as the original.
- Centre the book on the yellow indicator line with the bottom toward you. "Book-type Originals" 📖 Page 53

7 Turn to the next page, set the book again, and then press the [START] button.

- Repeat the above procedure until all the originals have been scanned.

8 After all the originals have been scanned, press the [FINISHED] button.

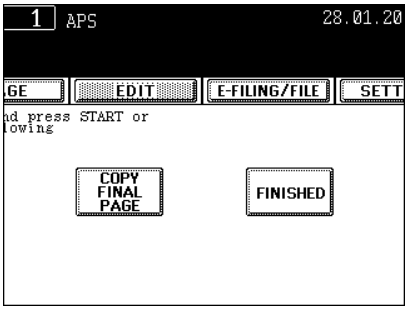

- Press the [COPY FINAL PAGE] button if the last original is 1-sided page.

5. 2 IN 1/4 IN 1

This feature allows multiple originals to be reduced and copied onto a single sheet of paper. There are 2 modes: 2 IN 1 copying, where 2 originals are copied onto a single sheet, and 4 IN 1 copying, where 4 originals are copied onto a single sheet. In addition, duplex 2 IN 1/4 IN 1 modes are available, where four/eight originals can be copied to 2 sides of a single sheet of paper.

* This mode cannot be used in combination with reduction/enlargement copying.

- 2 IN 1

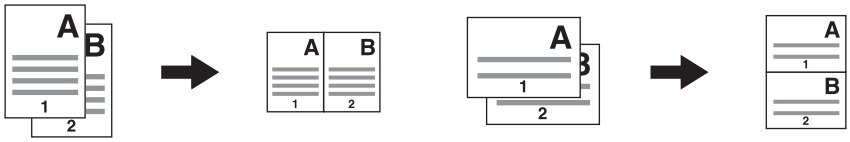

- 4 IN 1

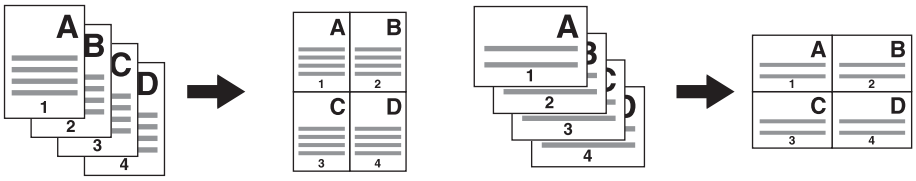

- 2 IN 1 DUPLEX (a: Side 1, b: Side 2)

* When a copy is turned with the line as a pivot, originals are printed on Side 2 (back face) as shown.

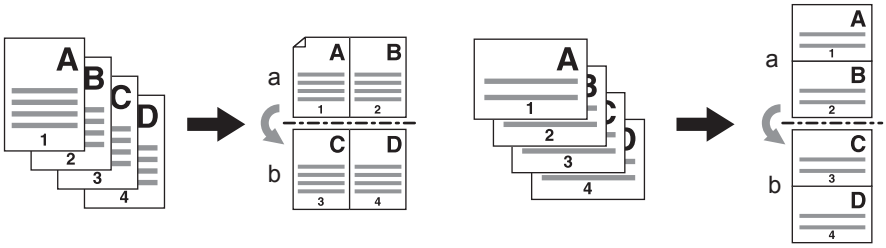

- 4 IN 1 DUPLEX (a: Side 1, b: Side 2)

* When a copy is turned with the line as a pivot, originals are printed on Side 2 (back face) as shown.

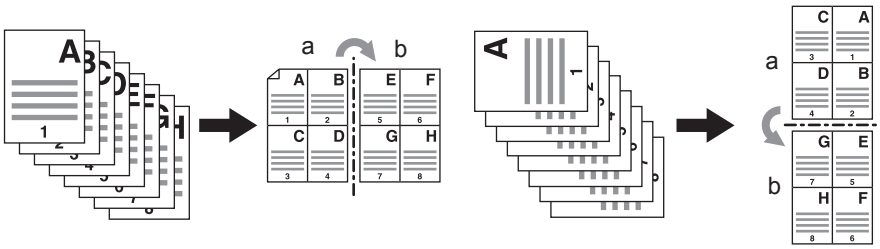

1 Place paper in the drawer(s).

- "4.SETTING COPY PAPER" 🕮 Page 35
- When using this mode in bypass copying ("Bypass Copying" 🕮 Page 61), be sure to specify the paper size.

Tip

To make copies onto paper which is not the same size as originals, press the [ZOOM...] button to display the screen on the right, and then press the desired paper size and the [AMS] button.

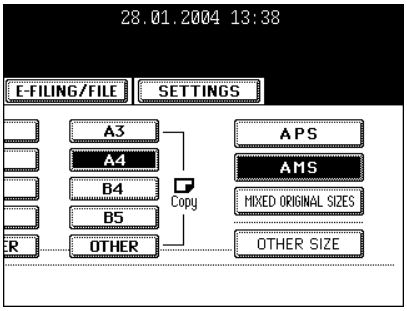

2 Place the original(s).

- "2.SETTING ORIGINALS" 🕮 Page 51

5

3 Press the [EDIT] button to enter the edit menu, and then press the [2 IN 1/4 IN 1] button.

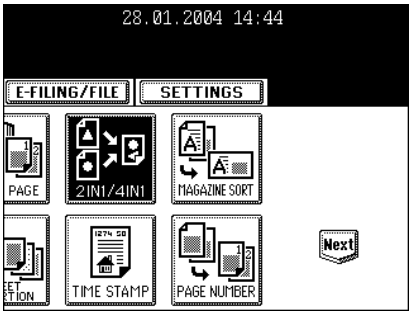

4 Select the type of image combination.

- Press the [2 IN 1] (or [4 IN 1], [2 IN 1 DUPLEX] or [4 IN 1 DUPLEX]) button.

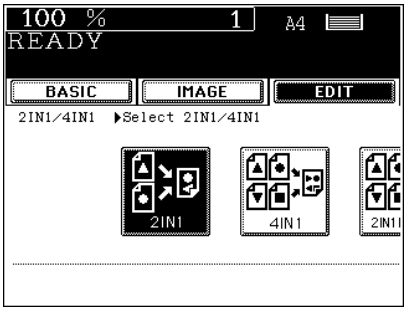

5 Select the type of the original.

- Press the [1 SIDE] (or [2 SIDE]) button.

● Select other copy modes as required.

6 Press the [START] button.

- When placing an original on the glass, follow the steps 5 to 6 on "Copying Procedure" 🕮 Page 48 continuously.

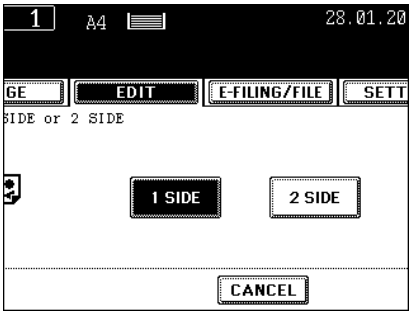

6. MAGAZINE SORT (FROM THE EDITING MENU)

The magazine sort mode allows 1-sided originals to be copied and sorted so that they can be folded and bound along a centre line like typical magazines or booklets.

Example of copying a 12-page document

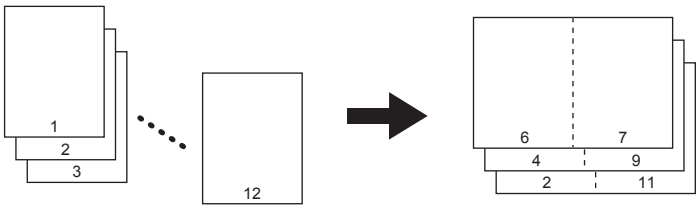

- If used in combination with the optional finisher (MJ-1025) equipped with saddle stitch, copies can be automatically folded in half and stapled along their centre line. (A3, A4-R, B4, LD and LT-R are available.)

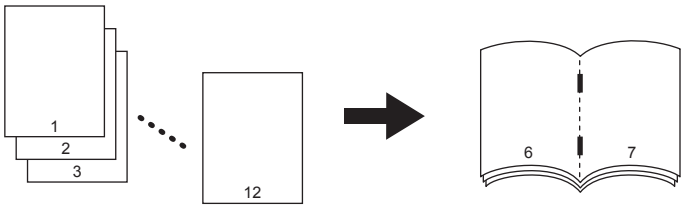

* 2 Magazine Sort procedures are available. For this function operated from the BASIC menu when the finisher (optional) is installed, see "Magazine Sort & Saddle Stitch Mode (Booklet Mode)" 🕮 Page 91

* When placing the portrait original in short edge feed direction in the reversing automatic document feeder, copies can be made correctly with Image Direction setting. See "14.DIRECTION OF COPY IMAGES IN “1 TO 2” AND “2 TO 1”" 🕮 Page 138.

1 Place paper in the drawer(s).

- "4.SETTING COPY PAPER" 🕮 Page 35

2 Select the paper type.

- For drawer feeding "Manual Paper Selection" 🕮 Page 76, step 3
- For bypass feeding "Bypass Copying on Standard Size Paper" 🕮 Page 62, step 4

3 Place the original(s).

- "2.SETTING ORIGINALS" 🕮 Page 51
- When placing them in the reversing automatic document feeder (optional), set them by referring to the order of pages in the illustrations above.
- When placing them on the glass, place the first page of the originals first.

4 Press the [EDIT] button to enter the edit menu, and then press the [MAGAZINE SORT] button.

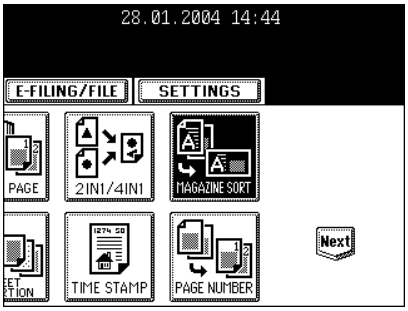

5 Adjust the binding margin, and then press the [ENTER] button.

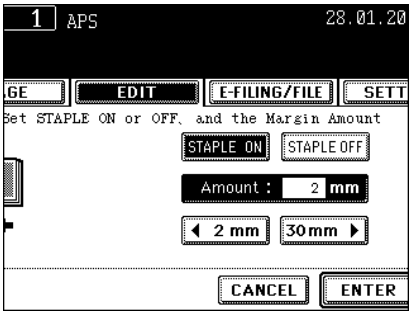

- The default width of the margin is 2 mm.
- To adjust the width, press the [2 mm] or [30 mm] button to select the desired number, and then press the [ENTER] button.
- If the optional finisher (MJ-1025) equipped with the saddle stitch is installed, copied paper can be automatically stapled along their centre line. Press the [STAPLE ON] button to staple it.
- Maximum number of sheets that can be stapled. "Available Conditions for Saddle Stitch" 📖 Page 93

● Select other copy modes as required.

6 Press the [START] button.

- When placing an original on the glass, follow steps 5 to 6 on "Copying Procedure" 📖 Page 48 continuously.

Trimming/Masking

You can select an area on an original and copy it with the area trimmed (only the inside of the area copied) or masked (only the outside of the area copied). 4 rectangular areas can be specified on an original.

* Image editing is only available with standard sized originals.
* If the settings of the original and copy sizes are not made appropriately, the image may not be copied completely.
  1: Trimming
  2: Masking

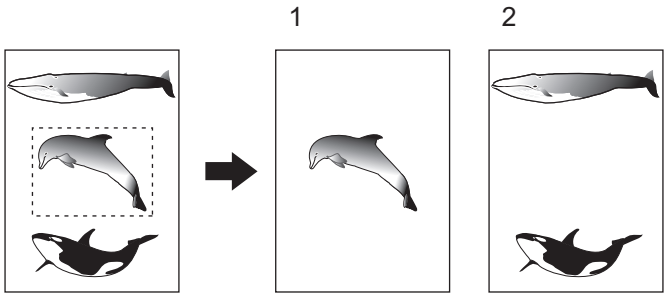

1 Place paper in the drawer(s).

- "4.SETTING COPY PAPER" 📖 Page 35
- When using this mode in bypass copying ("Bypass Copying" 📖 Page 61), be sure to specify the paper size.

2 Press the [EDIT] button to enter the edit menu, and then press the [EDITING] button.

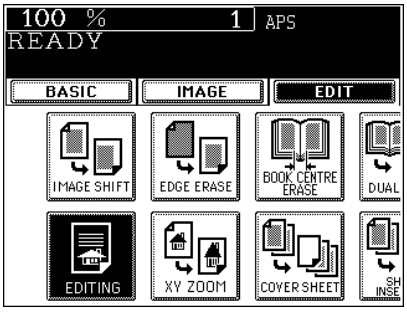

3 Press the [TRIM] (or [MASK]) button.

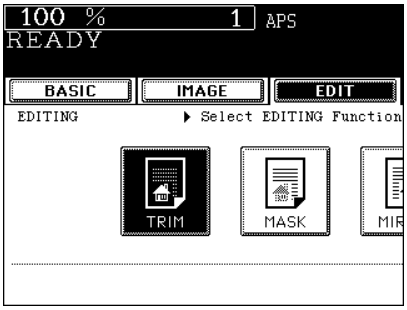

4 Place an original on the glass to specify the area.

- Set the original face up with the bottom toward you, fit its top left corner against the top left corner of the glass, and align it with the original scale.

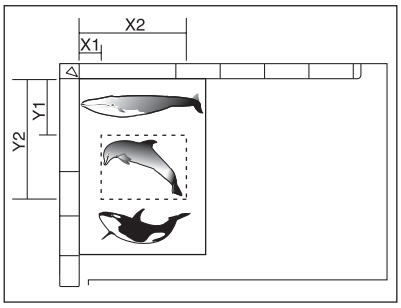

5 Using the original scale on the left and the inner (top) scale, read the position of the desired area as follows:

- X1 Distance from the top left to the left edge of the specified area.
- X2 Distance from the top left to the right edge of the specified area.
- Y1 Distance from the top left to the upper edge of the specified area.
- Y2 Distance from the top left to the lower edge of the specified area.

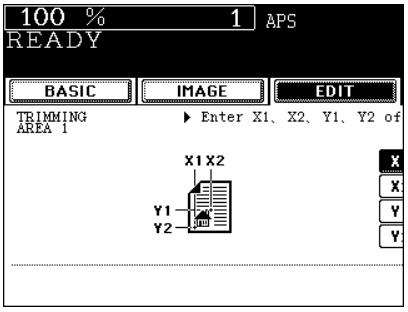

Tip

4 rectangular areas can be specified on an original.

6 Enter the distance values read in step 5 for the specified area.

- Key in the value for X1 with the digital keys and press the [SET] button.
- Similarly, set the values for X2, Y1 and Y2.
- When setting X1, X2, Y1, Y2 the display changes for entering the next edit area.

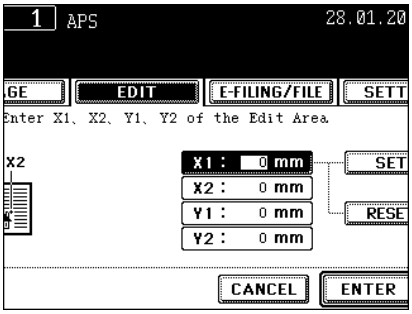

7 Press the [ENTER] button.

8 Place the original(s).

- "2.SETTING ORIGINALS" 📖 Page 51
- Place the original(s) on the glass with its face down, with its bottom toward you, with its top left aligned against the original scale on the left side.

● Select other copy modes as required.

9 Press the [START] button.

Mirror Image

Copies are made with images completely reversed (right and left).

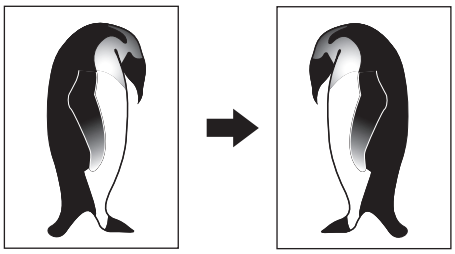

1 Place paper in the drawer(s).

- "4.SETTING COPY PAPER" 🕮 Page 35
- When using this mode in bypass copying ("Bypass Copying" 🕮 Page 61), be sure to specify the paper size.

2 Place the original(s).

- "2.SETTING ORIGINALS" 🕮 Page 51

3 Press the [EDIT] button to enter the edit menu, and then press the [EDITING] button.

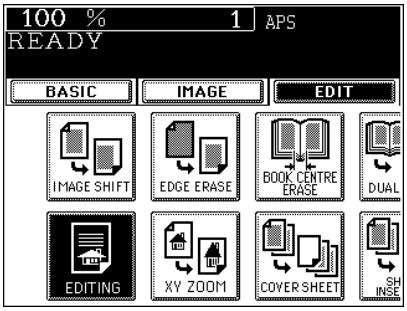

4 Press the [MIRROR] button.

- Select other copy modes as required.

5 Press the [START] button.

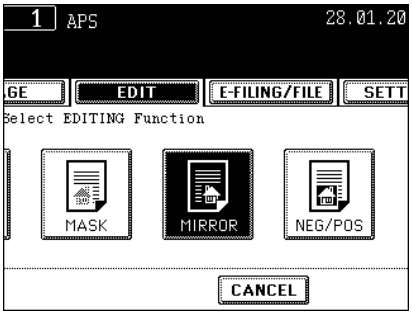

Negative/Positive Reversal

This function allows you to reverse the black areas on the original as white areas, or vice versa.

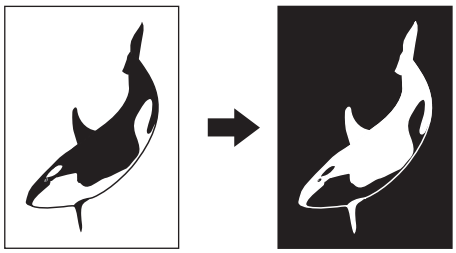

5

1 Place paper in the drawer(s).

- "4.SETTING COPY PAPER" 🕮 Page 35
- When using this mode in bypass copying ("Bypass Copying" 🕮 Page 61), be sure to specify the paper size.

2 Place the original(s).

- "2.SETTING ORIGINALS" 🕮 Page 51

3 Press the [EDIT] button to enter the edit menu, and then press the [EDITING] button.

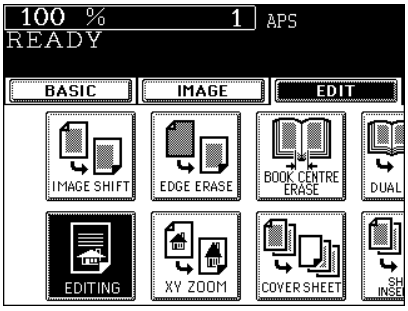

4 Press the [NEG/POS] button.

- Select other copy modes as required.

5 Press the [START] button.

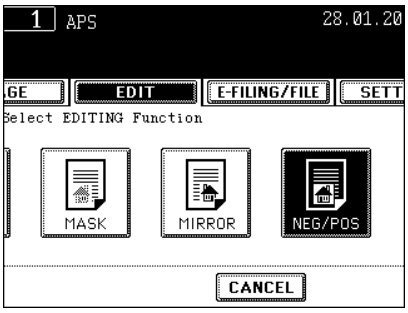

8. X-Y ZOOM

You can make copies with different reproduction ratios set for the X (horizontal) and Y (vertical) directions in the range of 25 to 400% respectively.
In the following cases, set the reproduction ratio in the range of 25 to 200%.
- When placing the original(s) on the reversing automatic document feeder (optional).

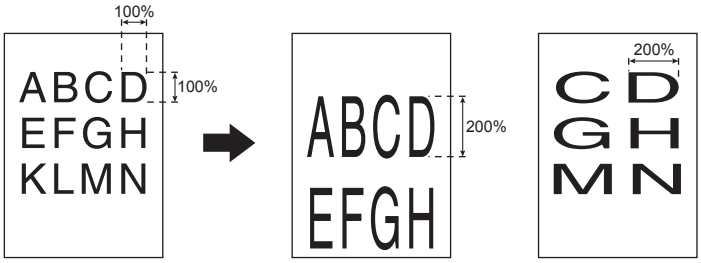

5

1 Place paper in the drawer(s).

- "4.SETTING COPY PAPER" 🕮 Page 35

2 Place the original(s).

- "2.SETTING ORIGINALS" 🕮 Page 51

3 Press the [EDIT] button to enter the edit menu, and then press the [XY ZOOM] button.

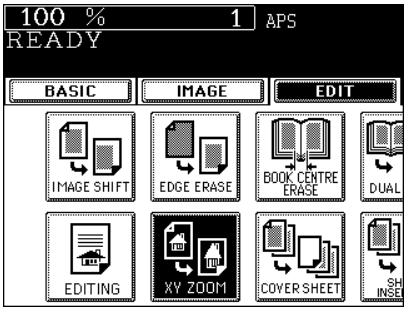

4 Set the reproduction ratios for the X (horizontal) and Y (Vertical) directions respectively.

- Using the [25%] and [400%] buttons on the screen, set the reproduction ratio for X and press the [SET] button. Similarly, set the reproduction ratio for Y.

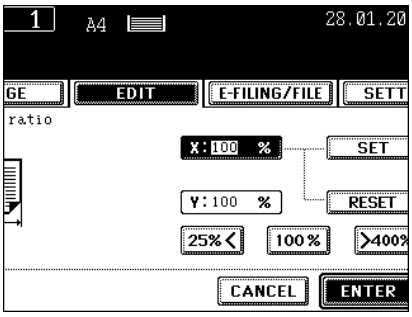

5 Press the [ENTER] button.

- Select other copy modes as required.

6 Press the [START] button.

9. COVER COPYING

A top cover and /or back cover (special sheets, e.g, coloured paper) can be added to each set of copies.

1: Adding a blank cover
2: Adding a copied cover
3: Adding a blank cover and a blank back cover
4: Adding a copied cover and blank back cover

1

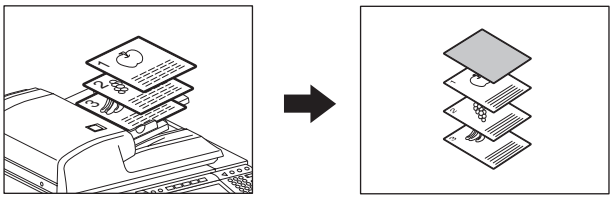

2

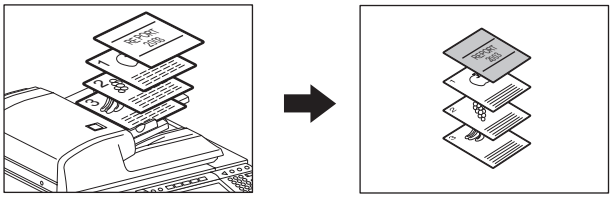

3

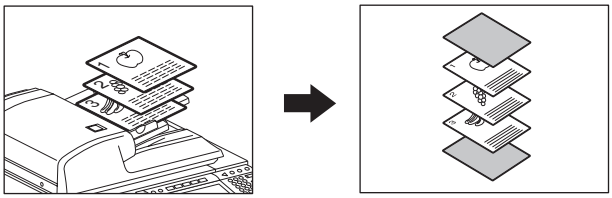

4

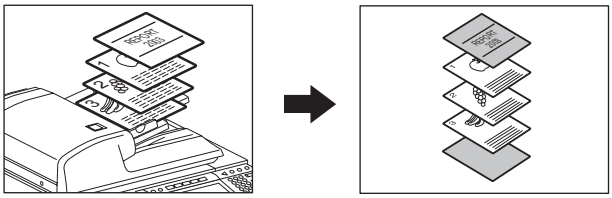

Tip

When using the cover feature, make sure all paper sources have the same orientation and size.
The cover sheets are placed in the drawer for cover sheet or on the bypass tray.

1 Place the cover sheet in the drawer for cover sheet or on the bypass tray.

- When placing it in the drawer for the cover sheet, it is necessary to set the paper type (cover sheet), size and weight. Setting the drawer for special use. "Setting the Drawer for Special Uses" 🕮 Page 41
- When placing it on the bypass tray, it is necessary to set the paper size and weight. "Bypass Copying on Standard Size Paper" 🕮 Page 62

2 Place paper (other than cover paper) in the drawer(s).

- "Setting the Drawer for Special Uses" 🕮 Page 41
- Place the paper of the same size and the same direction as that of cover.

3 Place the original(s).

- "2.SETTING ORIGINALS" 🕮 Page 51
- When placing an original on the glass, place the first page of your originals first.

4 Press the [EDIT] button to enter the edit menu, and then press the [COVER SHEET] button.

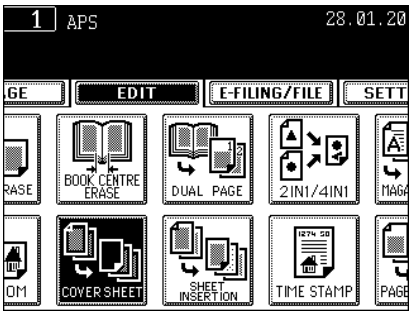

5 Select the desired cover sheet button:

- To add a blank top cover: [TOP BLANK]
- To add a copied top cover: [TOP COPIED]
- To add blank top and back covers: [BOTH BLANK]
- To add copied top and blank back covers: [TOP COPIED BACK BLANK]

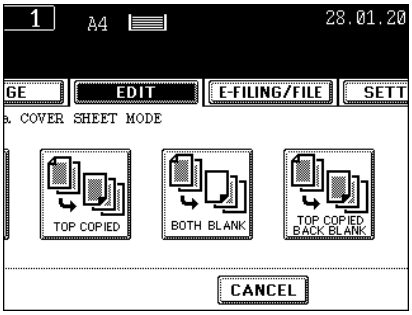

6 Press the [BASIC] button to enter the basic menu, and then select the paper source of the same size and direction as the cover sheet paper.

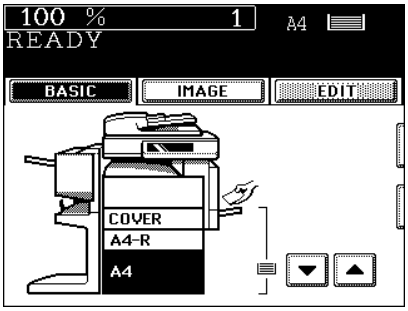

- Setting the drawer for cover sheet. "Setting the Drawer for Special Uses" 📖 Page 41

- Setting the bypass tray. "Bypass Copying" 📖 Page 61

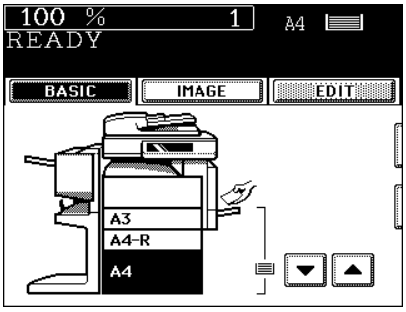

- Select other copy modes as required.

7 Press the [START] button.

- When using the automatic document feeder (optional):
  The original is scanned and copying starts.
- When using the original glass: Perform the following procedure.

Tip

When [TOP COPIED] button or [TOP COPIED BACK BLANK] button is selected, the cover sheet can be copied only on the top face (single-side) though 1-Sided Original to 2-Sided Copy is used.

8 Press the [YES] button and set the next original. Then press the [START] button.

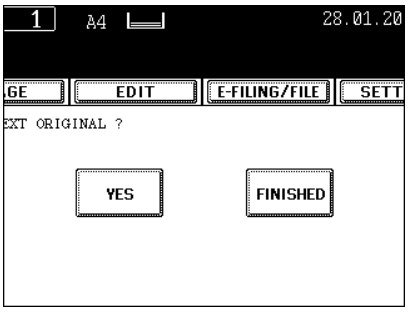

- Repeat this step for the subsequent original.

9 Once the final original has been scanned, press the [FINISHED] button.

- Copying starts.

10. SHEET INSERTION MODE

Special sheets of paper (such as coloured paper) are inserted into a set of copies at the specified pages.
There are 2 types of sheet insertion modes:
1 : Inserting blank sheets before the specified pages
2 : Inserting copied sheets at the specified pages

1

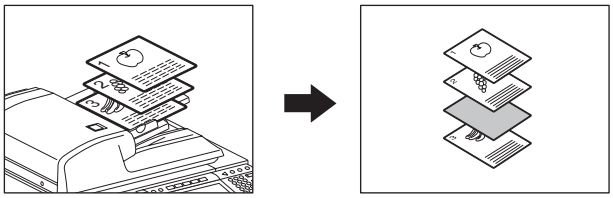

2

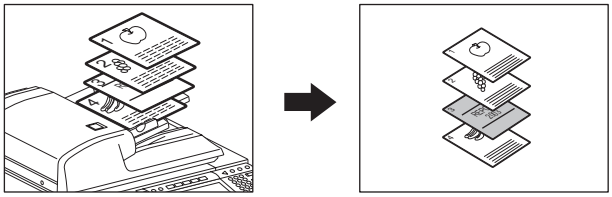

Tip

To make sheet copies, you have to set 2 or 3 drawers (the large capacity feeder can also be used) to the same paper size and orientation (1 or 2 for special insertion sheets and the other for normal sheets of copy paper).

1 Place sheets of paper in the drawer for the sheet insertion.

- "Setting the Drawer for Special Uses" 📖 Page 41

2 Place plain paper in the drawer(s). (The same size and direction in step 1)

3 Place the original(s).

- "2.SETTING ORIGINALS" 📖 Page 51

4 Press the [EDIT] button to enter the edit menu, and then press the [SHEET INSERTION] button.

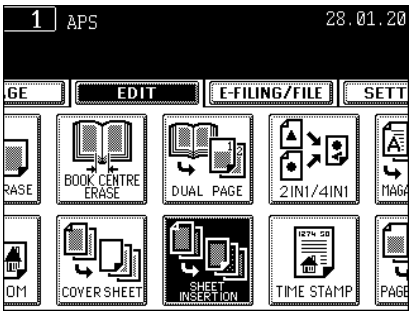

5 Press [COPIED] or [BLANK] button.

- To insert copied sheet at the specified page: [COPIED]
- To insert blank sheet before the specified paper: [BLANK]

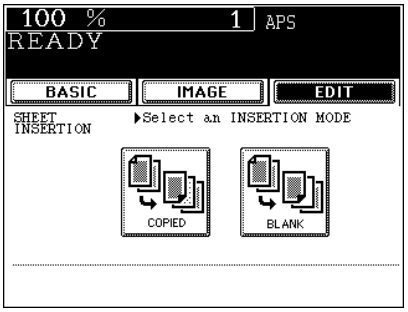

6 Key in the desired page number (no more than 3 digits) for insertion and press the [SET] button.

- On the screen, the page where the first sheet will be inserted is shown. The example on the right shows the first sheet inserted at (or before) page 10.
- To specify the next and subsequent pages, repeat step 6. Up to 15 pages can be specified.
- To have different sheets inserted than Insert source 1, select [INSERT SOURCE 2] and similarly key in the pages where you want the sheets inserted, then press the [SET] button. In this case, up to 15 pages in all can be specified for the source 1 and 2.

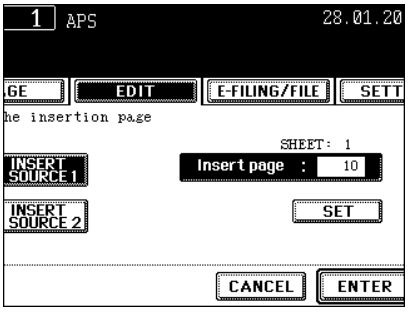

7 After you have finished specifying the insertion pages, press the [ENTER] button.

8 Key in the number of sets (or copies).

- Select other copy modes as required.

9 Press the [START] button.

11. TIME & DATE STAMP

The time and date of the scanning can be added to the copies.

1: Printed at the bottom of the portrait copy

2: Printed at the top of the landscape copy

1

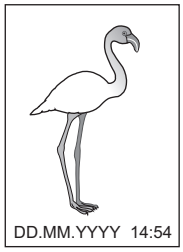

2

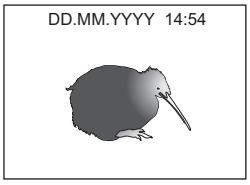

5

1 Place paper in the drawer(s).

- "4.SETTING COPY PAPER" 🕮 Page 35

2 Place the original(s).

- "2.SETTING ORIGINALS" 🕮 Page 51

3 Press the [EDIT] button to enter the edit menu, and then press the [TIME STAMP] button.

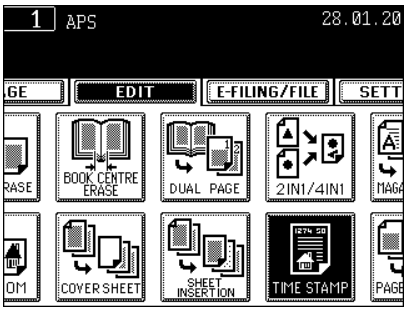

4 Select the orientation ([Short edge] or [Long edge]) and position (UPPER or LOWER) of the date and time to be printed, and then press the [ENTER] button.

- Select other copy modes as required.

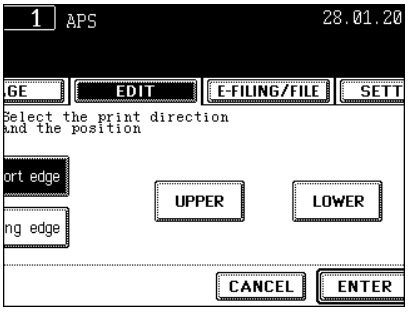

5 Press the [START] button.

12. PAGE NUMBERING

This feature allows numbers to be added at specified positions on copies.

1: Page number printed at the bottom centre on the portrait copy.

2: Page number printed at the top right on the landscape copy.

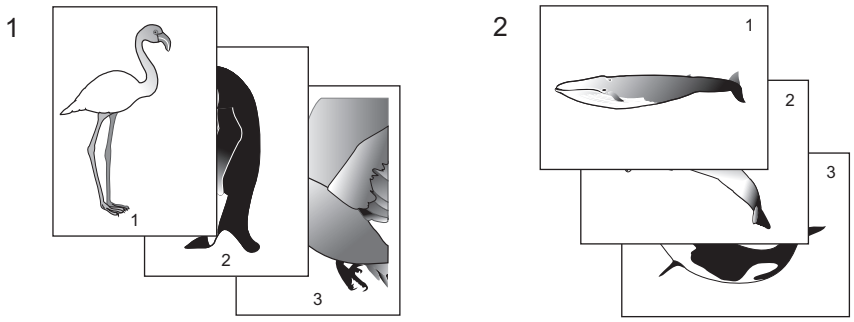

5

1 Place paper in the drawer(s).

- "4.SETTING COPY PAPER" 🕮 Page 35

2 Place the original(s).

- "2.SETTING ORIGINALS" 🕮 Page 51

3 Press the [EDIT] button to enter the edit menu, and then press the [PAGE NUMBER] button.

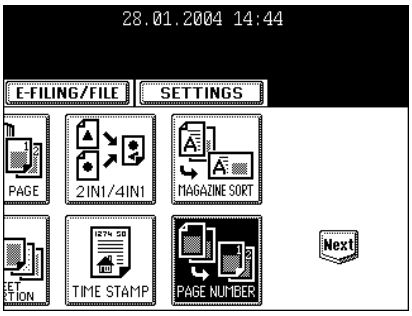

4 Select the orientation ([Short edge] or [Long edge]) and position of the page number to be printed, and then press the [ENTER] button.

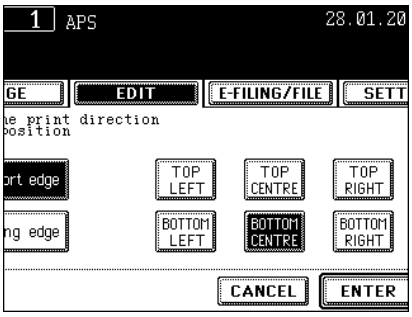

5 Key in the starting page number.

- If the start page number is "1", just press the [ENTER] button.

● Select other copy modes as required.

6 Press the [START] button.

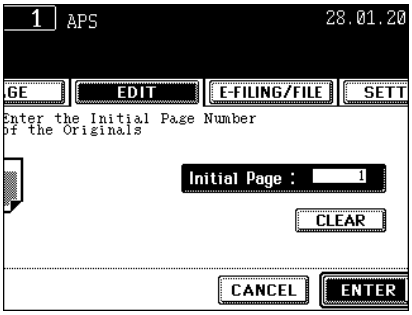

5

13. JOB BUILD

This feature allows you to scan up to 1000 pages of originals with the optimum original mode and image adjustment respectively, and then copy and store them as a single job.

* Automatic paper selection, Book to 2, Image editing, X-Y zoom, Cover copying, Magazine Sort, 2IN1/4IN1 and Sheet insertion mode cannot be selected.

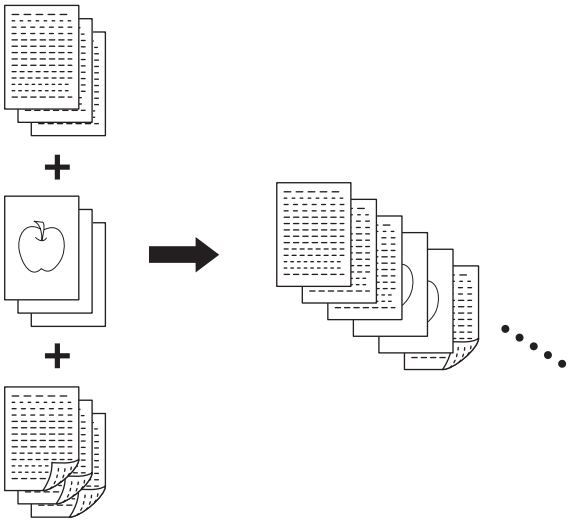

1 Place the originals of the 1st job.

- When an original is placed on the original glass, one page is regarded as one job.
- When originals are placed on the reversing automatic document feeder or mixed sized originals are set, see the following page.

2 Press the [EDIT] button to enter the edit menu, and then press the [JOB BUILD] button.

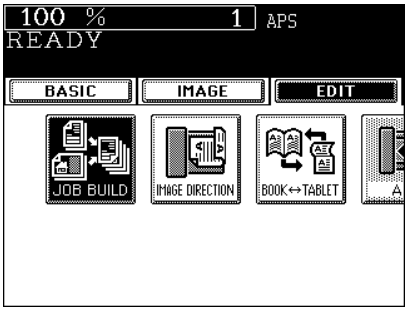

3 Press the [ENTER] button on the screen to set JOB BUILD.

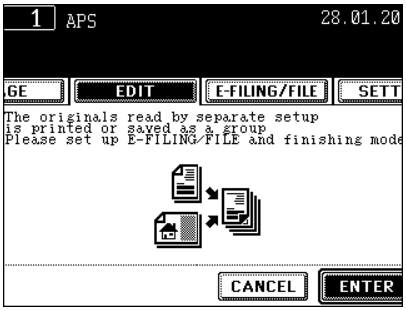

4 After “Press START button to copy after changing settings” appears, press the [BASIC] button.

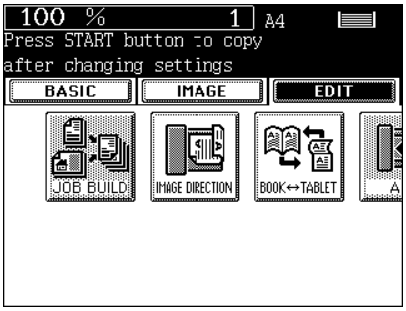

5 On the Basic screen, set the copy mode, e-filing/file function, and finishing mode you want to use for the 1st job.

- Press the [SETTINGS] button to confirm the settings.
- To change the settings, press the [FC] button, and then start the procedure again from step 1.

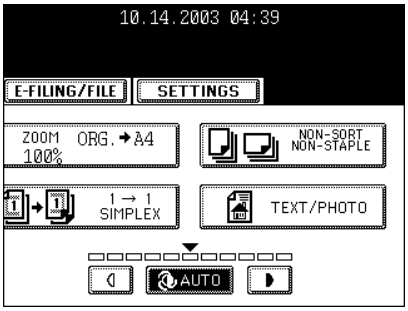

Note

Note that the settings for mixed sized originals, paper size to be copied, finishing mode (unselectable for mixed sized originals), image shift, book centre erase, time & date stamp, page numbering, image direction in 2-sided copying, book <-> tablet, e-filing/file function cannot be changed for each job, from the 2nd job or later.

6 Press the [START] button.

- Scanning the originals of the 1st job starts.

7 After scanning is completed, the [JOB FINISH] button is displayed on the screen. Each button has the following functions.

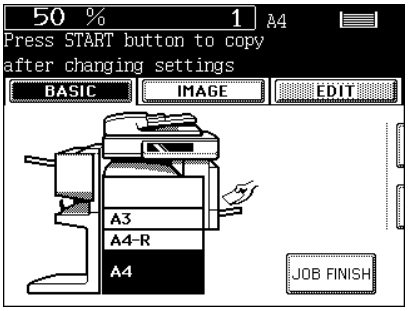

- [JOB FINISH] button: All of the scanned originals are outputted as the settings, they are stored if this was set, and then the settings of JOB BUILD are released.

8 Place the originals of the 2nd job.

9 On the Basic screen, set the settings for the 2nd job.

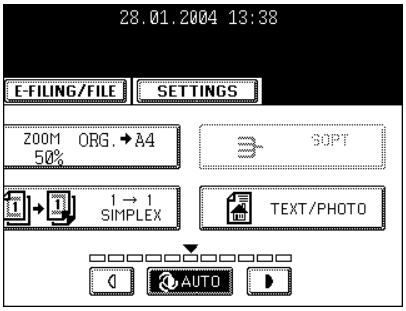

- The settings for the 2nd job or later can be changed with regard to the following functions.
  Reproduction ratio, automatic magnification selection, original size, other size
  Scanning mode
  Image adjustment mode
  Edge erase, dual-page
- When the 1st job is set and 2-sided copying (or 1-sided copying) is selected, the setting cannot be changed to 1-sided copying (or 2-sided copying) from the 2nd job.

Tips

- Press the [SETTING] button to confirm the settings.
- To change the settings, press the [FC] button, and then start the procedure again from step 1.
- Be aware that copying will be performed in the same modes as those of the 1st job if the copy modes are not changed.

10 After having completed the settings, press the [START] button.

- Scanning the originals starts.

Tips

- For the 3rd job or later, repeat from step 7 to 10.
- Any number of jobs can be set until the total number of scanned original pages reaches 1000.

11 After having completed all the settings and scanning of the originals, press the [JOB FINISH] button on the Basic screen.

- When copy and e-file/file function are set, storing starts.

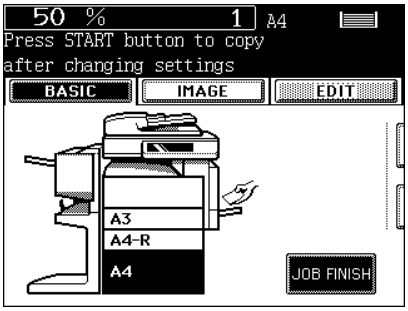

5

14. DIRECTION OF COPY IMAGES IN “1 TO 2” AND “2 TO 1”

When a lengthwise A3, A5 or B4 original is copied under the mode of 1-Sided Originals to 2-Sided Copies, 2-Sided Originals to 1-Sided Copies, this function allows you to adjust the direction for 'open to left' opening.

* This function is not necessary for copying in the direction of 'vertical' opening.
1: Set
2: Non set

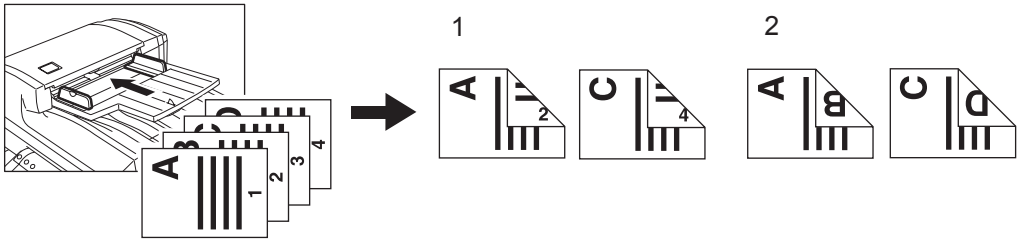

5

1 Place paper in the drawer(s).

- "4.SETTING COPY PAPER" 🕮 Page 35

2 Place the original(s).

- "2.SETTING ORIGINALS" 🕮 Page 51

3 Select 1-Sided Originals to 2-Sided Copies (or 2-Sided Originals to 1-Sided Copies).

- "4.DUPLEX COPYING" 🕮 Page 96

4 Press the [EDIT] button to enter the edit menu, and then press the [IMAGE DIRECTION] button.

- If the desired function buttons are not displayed, press the [Next] button to change the menu.

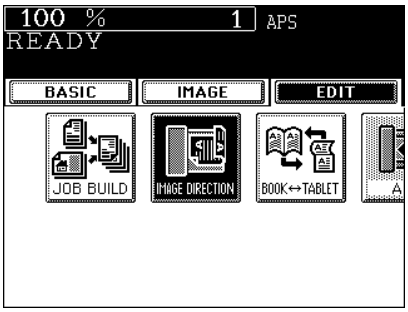

5 Press the [ENTER] button.

- Select other copy modes as required

6 Press the [START] button.

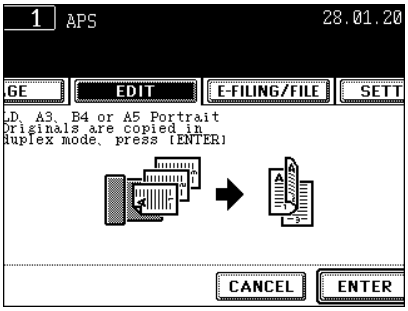

15. DIRECTION OF DUPLEX COPY IMAGES IN “2 TO 2”

When copying under the mode of 2-Sided Originals to 2-Sided-Copies, this function allows you to rotate the backside of the original to be copied by 180. It is useful when 'open to left' (Book) originals need to be copied in 'open to top' (Tablet), and the opposite condition is available.

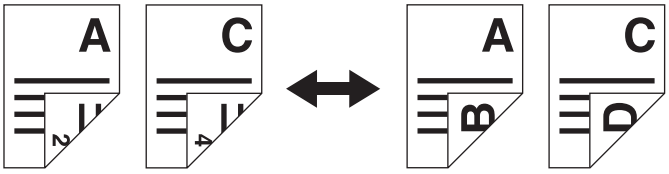

1 Place paper in the drawer(s).

- "4.SETTING COPY PAPER" 🕮 Page 35

2 Place the original(s).

- "2.SETTING ORIGINALS" 🕮 Page 51

3 Press the [2 → 2 DUPLEX] in the basic menu.

- "4.DUPLEX COPYING" 🕮 Page 96

4 Press the [EDIT] button to enter the edit menu, and then press the [BOOK ↔ TABLET] button.

- If the desired function buttons are not displayed, press the [Next] button to change the menu.

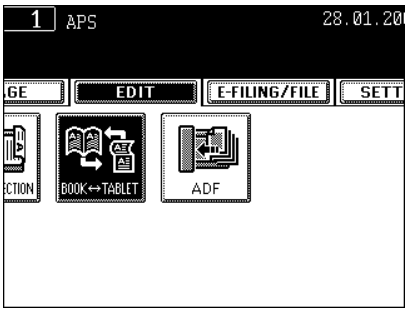

5 Press the [ENTER] button.

- Select other copy modes as required

6 Press the [START] button.

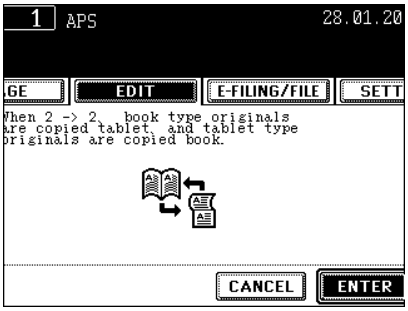

16. CONTINUOUS/SINGLE ORIGINAL FEEDING

When using the optional reversing automatic document feeder, you can select the continuous feed mode (default setting) so that multiple (or single) originals are continuously fed in one by one, or the single feed mode where an original is automatically pulled in when you insert it and starts being copied.

* When setting the different size of originals "Setting the [MIXED ORIGINAL SIZE]" 📖 Page 78

Continuous Feed Mode

1 Place paper in the drawer(s).

- "4.SETTING COPY PAPER" 📖 Page 35

2 Place the original(s) on the reversing automatic document feeder (optional).

- "When Using the Reversing Automatic Document Feeder (optional)" 📖 Page 54

3 Press the [EDIT] button to enter the edit menu, and then press the [ADF] button.

- If the desired function buttons are not displayed, press the [NEXT] button to change the menu screen.

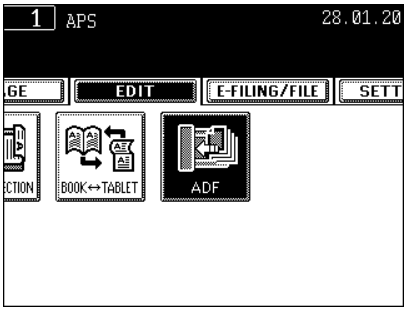

4 Press the [ADF] button.

- Select other copy modes as required.

5 Press the [START] button.

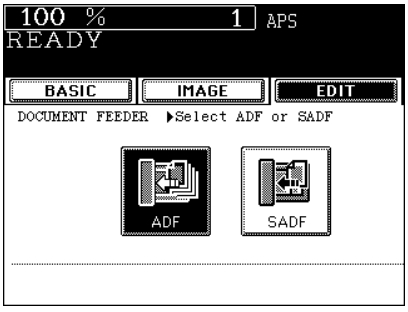

Tip

When the number of originals is too large to be set at one time, you can divide the originals into 2 to 10 sets and set them one after another. To do so, place the first set of originals first, and press the [CONTINUE] button while the scanning is in progress. After they have been scanned, place the next set of originals that should be scanned.

Single-feed Mode

1 Place paper in the drawer(s).

- "4.SETTING COPY PAPER" 🕮 Page 35

2 Press the [EDIT] button to enter the edit menu, and then press the [ADF] button.

- If the desired function buttons are not displayed, press the [NEXT] button or [Prev] button to change the menu.

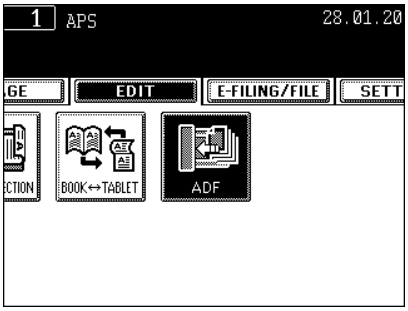

3 Press the [SADF] button.

- Select other copy modes as required.

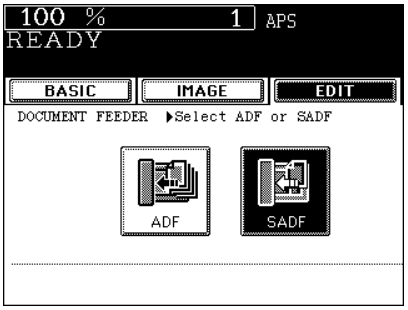

4 Place the original on the reversing automatic document feeder (optional).

- "Inside the Single-feed Mode" 🕮 Page 56
- The original is automatically pulled in and the screen changes as shown on the right.
- If there are more originals, set them in the same way. (The same operation is performed whether or not you press the [YES] button.)

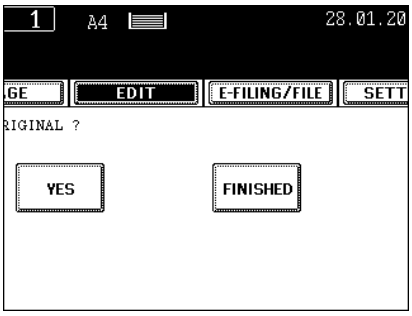

5 After all originals have been fed through the reversing automatic document feeder, press the [FINISHED] button.

- Copying begins.

6. STORING ORIGINALS

1. STORE TO e-FILING 144
2. COPY & FILE 147

1. STORE TO e-FILING

In this function, the copied original data can be stored in the e-Filing. During copying, you can print it at the same time, as required. After storing the original data, you can print it at any time.
To store the original data, you can specify the public box or one of user boxes. The public box is a pre-set box since the installation of the equipment, and it will be used to store documents that any user may need to work with. The user box is the one created by the user, and, if password is set, you need to enter the password correctly.
Before storing the original data in e-Filing, you need to set up the user boxes. For setting up the user boxes and printing the stored documents, see "2.SETTING UP BOX" 📖 Page 224 and "5.PRINTING STORED DOCUMENT" 📖 Page 229.

* It is recommended to back up the data on the equipment's hard disc to prevent loss of data. You can back it up with the client PC using the File Downloader. See the [e-Filing Guide] for details.

Tip

You can also store the scanned original data in the e-Filing using the scanning operation. ("2.SCAN TO e-FILING" 📖 Page 154) When you use the original data with the client PC via network, it is recommended to store the original data using the scanning operation rather than using the copy operation explained here.

1 Place the original(s).

- "2.SETTING ORIGINALS" 📖 Page 51
- If there is not enough space in the hard disc, the number of originals that can be stored may be restricted.
- When you want to store and copy the original(s) simultaneously, select the copy modes as required.

2 Press the [E-FILING/FILE] button on the basic screen to enter the filing menu.

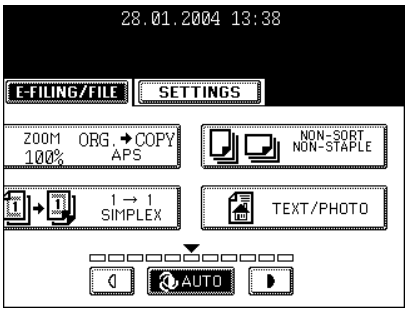

3 Press the [STORE TO E-FILING] button.

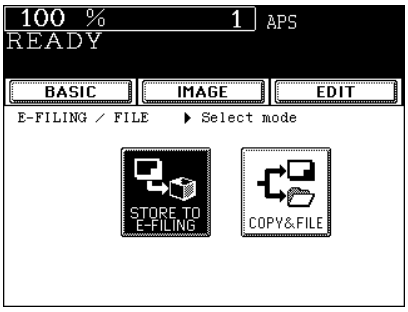

4 Press the [BOX/FOLDER] button.

- The box list is displayed.

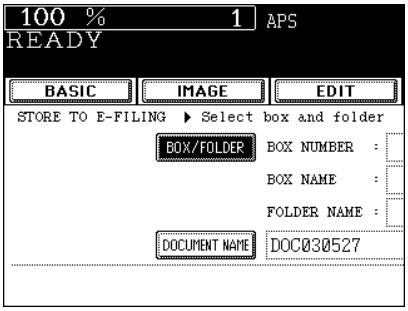

5 Select the box in which you want to store the data, and then press the [ENTER] button.

- Select either the “Public box” or the “User box”.
- See the procedure of “e-FILING” for setting a new user box. "2.SETTING UP BOX" 🕮 Page 224

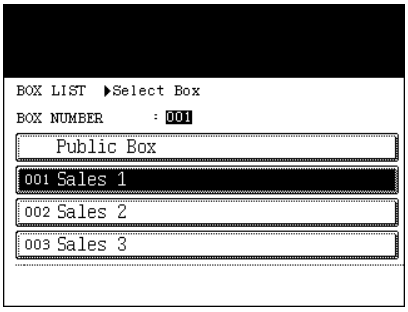

6 The document list in the selected box is displayed. When you want to store the original(s) in an existing folder, select the folder and press the [OPEN FOLDER] button. If you have no folder to be selected, press the [ENTER] button.

- If you want to store the data in the user box, password entry may be required to display the list.
- Creating the folder can be performed only via TopAccess. See the [e-Filing Guide].

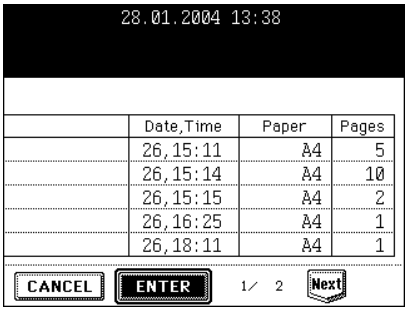

7 Press the [DOCUMENT NAME] button to enter the name of the scanned data.

- The letter entry menu ("Setting Letters" 🕮 Page 30) is displayed. A document name can contain up to 64 letters.

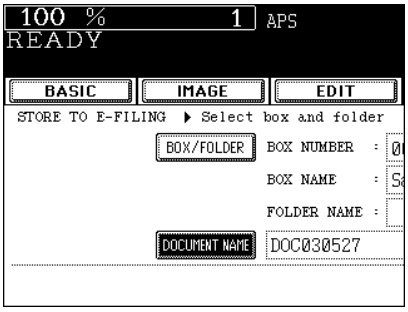

8 **Press the [ENTER] button.**

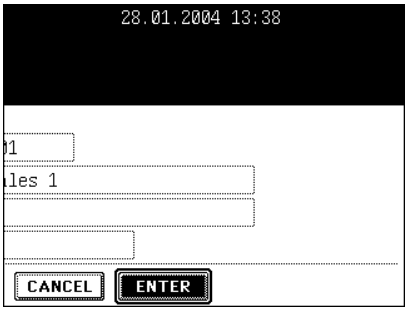

9 **When "PRINT THIS DOCUMENT?" appears, press the [YES] button to store and print the document.**

- If you want to store the document without printing, press the [NO] button.

10 **Press the [START] button.**

- Storing the original starts.

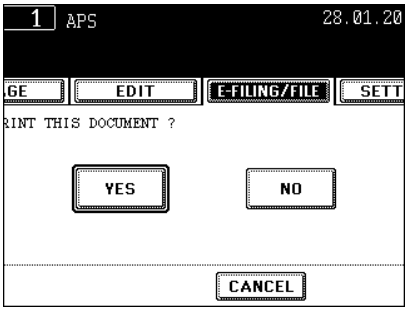

11 **"NEXT ORIGINAL?" appears. If you have the other originals to be stored, press the [YES] button. If not, press the [FINISHED] button.**

- When the original is set on the reversing automatic document feeder (optional) to be scanned in the Continuous Feed mode, this screen is not displayed.

12 **Press the [FUNCTION CLEAR] button to finish this job.**

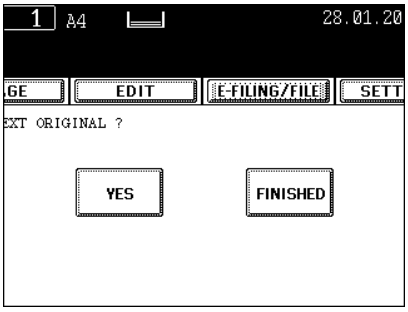

2. COPY & FILE

In this COPY & FILE function, the copied original data can be sent and stored to the Share folder of the hard disc in the equipment or the specified PC. You can access the data stored in the Share folder directly from the client PC via network.

* The network administrator has to make settings for storing the original data to the PCs. For details, see the [Network Administrator's Guide].
* It is recommended to back up the data stored in the Share folder of the hard disc with the client PC via network.

Note

To use COPY & FILE function, ‘optional Printer kit (GM-1020) and optional Scanner upgrade kit (GM-3020)’, or ‘optional Printer/Scanner kit (GM-2020)’ is required.

1 Place the original(s).

- "2.SETTING ORIGINALS" 📖 Page 51
- If there is not enough space in the hard disc, the number of originals that can be stored may be restricted.
- Select the copy mode as required.

2 Press the [E-FILING/FILE] button on the basic screen to enter the filing menu.

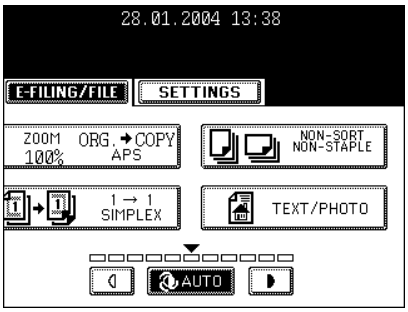

3 Press the [COPY & FILE] button.

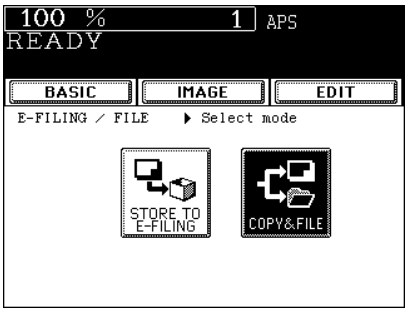

4 Press the [FILE NAME] button to enter the file name of the stored data.

- The letter entry menu is displayed.
  A file name can contain up to 45 letters.

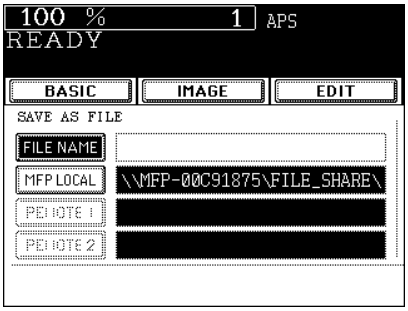

5 Select the desired location.

- [MFP LOCAL]: Select when the originals should be stored in the hard disc in the main equipment. The original data will be stored under the directory path shown on the screen.
- [REMOTE 1], [REMOTE 2]: Select when the originals should be stored in the hard disc of user's PC.
  The administrator has to make settings to select “REMOTE 1” or “REMOTE 2”.
  For details, see the [Network Administrator’s Guide].

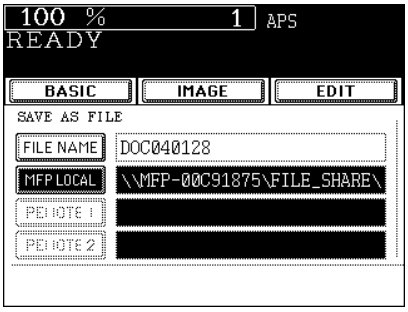

6 Select the desired file format.

- The SCAN folder is automatically created and the original data will be stored into this folder. If you select “TIFF (SINGLE)”, an additional folder with the name you entered in step 4 is further created, and each page will be stored into this folder. You can access the original data with the client PC via network, by opening the FILE_SHARE folder in the equipment’s hard disc.

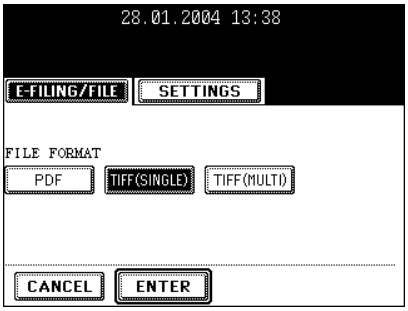

7 After all the settings have been made, press the [ENTER] button.

8 Press the [START] button.

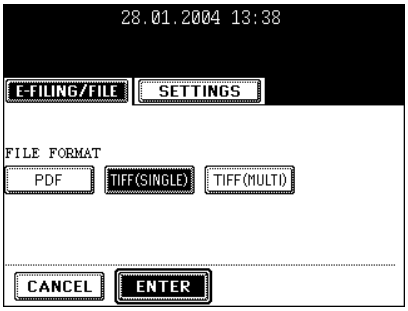

9 **“NEXT ORIGINAL?” appears. If you have the other originals to be stored, press the [YES] button. If not, press the [FINISHED] button.**

- This screen is displayed when the scanning is performed from the original glass. It is not displayed from the reversing automatic document feeder (optional).

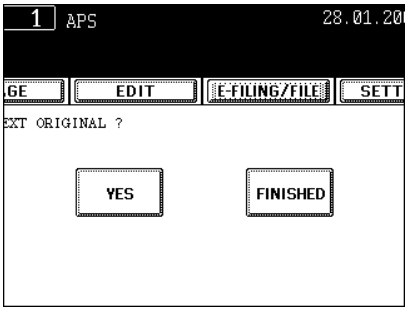

7. SCANNING THE IMAGES

1. SCAN SETTING IN THE TOUCH PANEL 152
2. SCAN TO e-FILING 154
3. SCAN TO FILE 158
4. SCAN TO E-MAIL 162

1. SCAN SETTING IN THE TOUCH PANEL

If the scanning function is used, originals set on the reversing automatic document feeder (optional) or on the original glass can easily be scanned as image data.
The scanned image data can be sent or stored to the destinations of “SCAN TO e-FILING”, “SCAN TO FILE” or “SCAN TO E-MAIL”.

* See the [e-Filing Guide] about how to save the data to PCs.

Note

To use scanning function, ‘optional Printer kit (GM-1020) and optional Scanner upgrade kit (GM-3020)’, or ‘optional Printer/Scanner kit (GM-2020)’ is required.

Scanning Procedure

1 Place the original(s).

- "2.SETTING ORIGINALS" 🕮 Page 51
- Originals acceptable to be set "2.SETTING ORIGINALS" 🕮 Page 51
- When placing an original on the glass "When Placing an Original on the Glass" 🕮 Page 52
- When placing the original on the reversing automatic document feeder (optional) "16.CONTINUOUS/SINGLE ORIGINAL FEEDING" 🕮 Page 141

2 Press the [SCAN] button on the control panel to enter the scan menu.

- The basic scan menu is displayed.

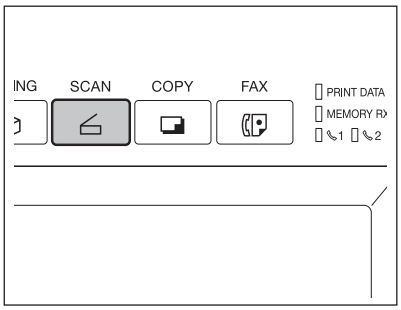

3 Select the desired scan mode and press the button.

- The screen on the right is displayed as an example of selecting SCAN TO E-FILING.
- To select SCAN TO E-FILING "2.SCAN TO e-FILING" 🕮 Page 154
  To select SCAN TO FILE "3.SCAN TO FILE" 🕮 Page 158
  To select SCAN TO E-MAIL "4.SCAN TO E-MAIL" 🕮 Page 162

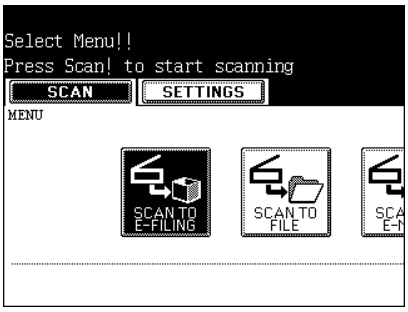

4 Set the scanning conditions using the buttons on the touch panel and the digital keys.

- Press the [Next] or [Prev] button to switch the screen and make necessary settings. After having completed all the settings, press the [ENTER] button.

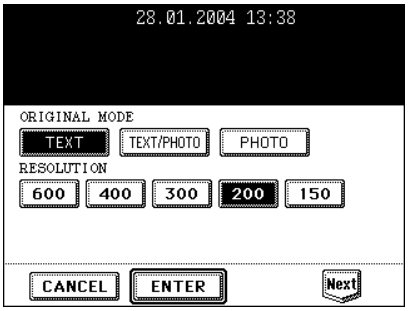

5 Press the [SCAN!] button.

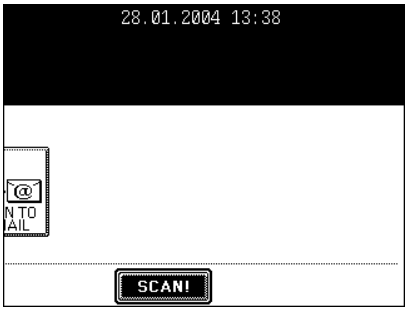

6 "To continue, place document on glass. And press the Scan!" appears. If you want to continue scanning, press the [SCAN!] button. If you want to finish scanning, press the [JOB FINISH] button.

- When the original is set on the reversing automatic document feeder (optional) to be scanned in the Continuous Feed mode, this screen is not displayed.
- If you want to cancel the storage of the scanned data, press the [JOB CANCEL] button.
- You can change the setting of the original type and scanning conditions using the [EDIT] button before pressing the [SCAN!] button.

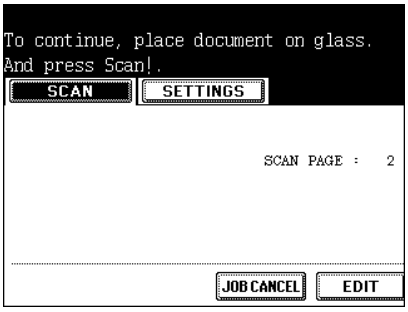

2. SCAN TO e-FILING

In this function, the scanned original data can be stored in the e-Filing. You can scan up to 200 sheets of A4 size per 1 job. During scanning, you can perform the Scan to File or the SCAN TO E-MAIL simultaneously, as required. After storing the original data, you can print it at any time.
To store the original data, you can specify the public box or one of user boxes. The public box is a pre-set box since the installation of the equipment, and it will be used to store documents that any user may need to work with. The user box is the one created by the user, and, if password is set, you need to enter the password correctly.
Before storing the original data in e-Filing, you need to set up the user boxes. For setting up the user boxes and printing the stored documents, see "2.SETTING UP BOX" 🕮 Page 224 and "5.PRINTING STORED DOCUMENT" 🕮 Page 229.

* It is recommended to back up the data on the equipment's hard disc to prevent loss of data. You can back it up with the client PC using the File Downloader. See the [e-Filing Guide] for details.

Note

To use SCAN TO e-FILING function, ‘optional Printer kit (GM-1020) and optional Scanner upgrade kit (GM-3020)’, or ‘optional Printer/Scanner kit (GM-2020)’ is required.

Tip

You can also store the copied original data in the e-Filing using the copy operation. ("1.STORE TO e-FILING" 🕮 Page 144) However, when you use the original data with the client PC via network, it is recommended to store the original data using the scanning operation explained here, rather than using the copy operation.

7

1 Place the original(s).

- "2.SETTING ORIGINALS" 🕮 Page 51
- If there is not enough space in the hard disc, the number of originals that can be scanned may be restricted.

Tip

The reversing automatic document feeder (optional) enables consecutive scanning of more than one original.

2 Press the [SCAN] button on the control panel to enter the scan menu.

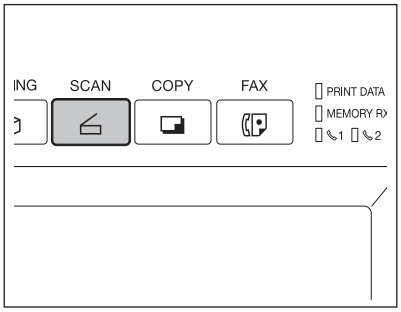

3 Press the [SCAN TO E-FILING] button.

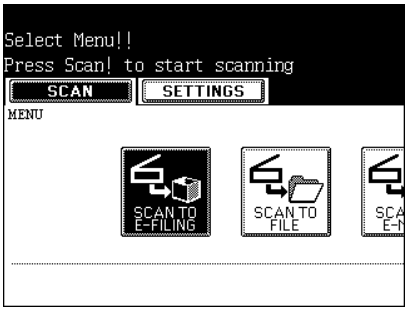

4 Press the [BOX/FOLDER] button.

- The box list is displayed.

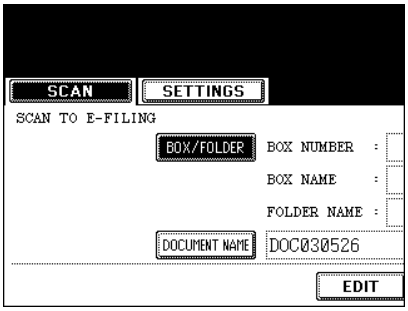

5 Select the box in which you want to store the data and press the [ENTER] button.

- Select either the “Public box” or the “User box”.
- See the procedure of “e-FILING” for setting the user box. "2.SETTING UP BOX" 📖 Page 224

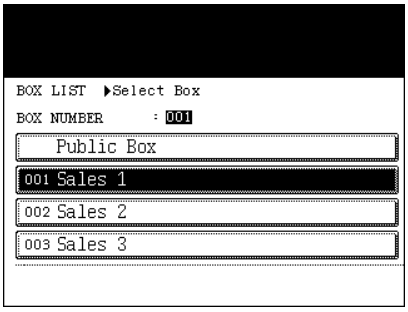

6 The document list in the selected box is displayed. When you want to store the original(s) in an existing folder, select the folder and press the [OPEN FOLDER] button. If you have no folder to be selected, press the [ENTER] button.

- If you want to store the data in the user box, password entry may be required to display the list.
- Creating the folder can be performed only via TopAccess. See the [e-Filing Guide].

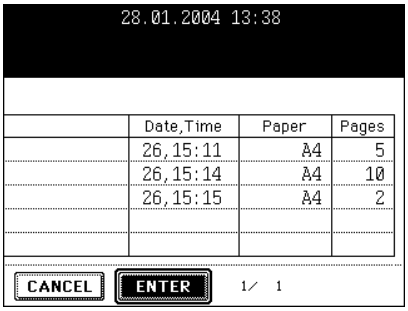

7

7 Press the [DOCUMENT NAME] button to enter the name of the scanned data.

- The letter entry menu (see "Setting Letters" 📖 Page 30) is displayed. A document name can contain up to 64 letters.
- Press the [ENTER] button on the letter entry menu.

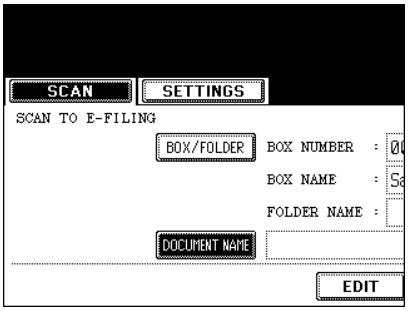

8 Press the [EDIT] button to set the original type and size, and the scanning conditions.

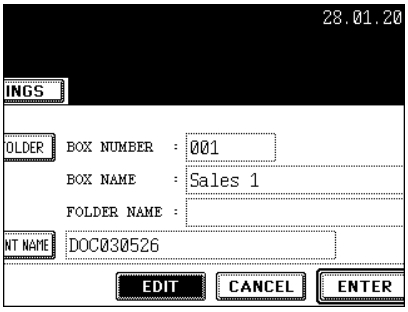

- Press the [Next] or the [Prev] button to switch the screen and make necessary settings. After having completed all the settings, press the [ENTER] button.

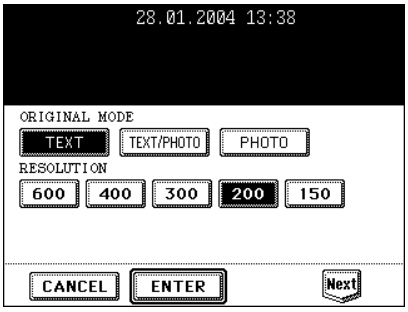

9 Press the [ENTER] button.

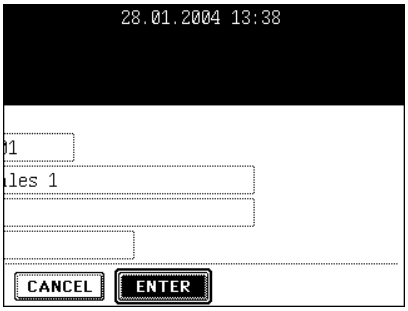

10 Press the [SCAN!] button.

Tip

If the “SCAN TO FILE” or the “SCAN TO E-MAIL” button is pressed to make the setting before pressing the [SCAN!] button, the specified 2 jobs can be performed simultaneously.

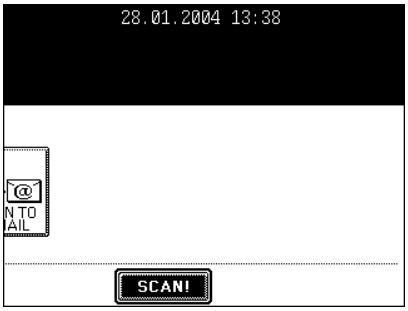

11 “To continue, place document on glass. And press Scan!” appears. If you want to finish scanning, press the [JOB FINISH] button.

- If you want to continue scanning, press the [SCAN!] button.
- When the original is set on the reversing automatic document feeder (optional) to be scanned in the Continuous Feed mode, this screen is not displayed.

Tips

- You can change the original size, type and scanning conditions by pressing the [EDIT] button for the next scanning.
- If you want to cancel the storage of the scanned data, press the [JOB CANCEL] button.

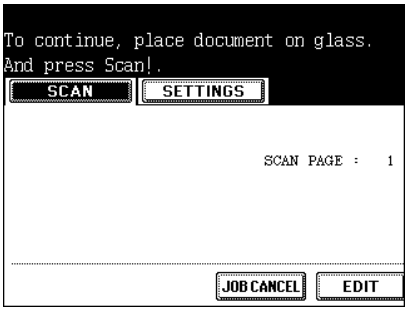

3. SCAN TO FILE

In this SCAN TO FILE function, the scanned original data can be sent and stored to the Share folder of the hard disc in the equipment or the specified PC. You can scan up to 1000 sheets of A4 size per 1 job. You can access the data stored in the Share folder directly from the client PC via network.

* The network administrator has to make settings for storing the original data to the PCs. For details, see the [Network Administrator's Guide].
* It is recommended to back up the data stored in the Share folder of the hard disc with the client PC via network.

Note

To use SCAN TO FILE function, ‘optional Printer kit (GM-1020) and optional Scanner upgrade kit (GM-3020)’, or ‘optional Printer/Scanner kit (GM-2020)’ is required.

1 Place the original(s).

- "2.SETTING ORIGINALS" 📖 Page 51
- If there is not enough space in the hard disc, the number of originals that can be scanned may be restricted.

Tip

The reversing automatic document feeder (optional) enables consecutive scanning of more than one original.

2 Press the [SCAN] button on the control panel to enter the scan menu.

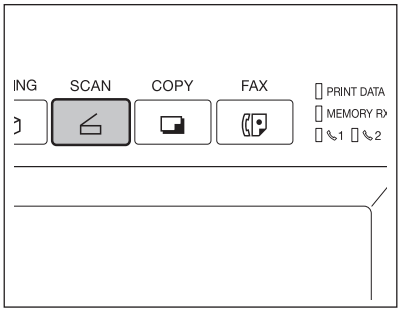

3 Press the [SCAN TO FILE] button.

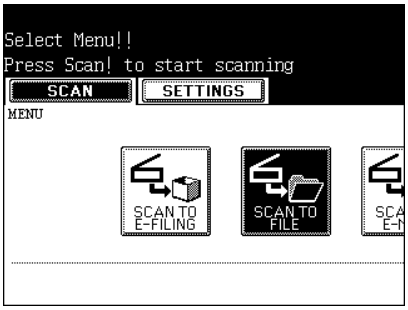

4 Press the [FILE NAME] button to enter the file name of the scanned data.

- The letter entry menu is displayed. A file name can contain up to 45 letters.
- After entering the letters, be sure to press the [ENTER] button.

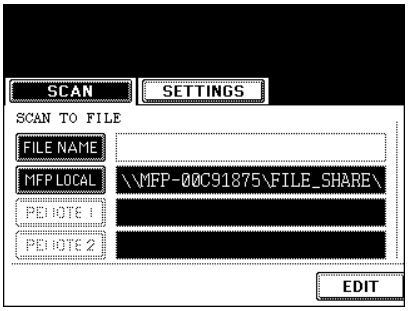

5 Select the desired location.

- [MFP LOCAL]: Select when the originals should be stored in the hard disc in the main equipment. The original data will be stored under the directory path shown on the screen.
- [REMOTE 1], [REMOTE 2]: Select when the originals should be stored in the hard disc of user's PC via server.
  The administrator has to make settings to select [REMOTE 1] or [REMOTE 2] using the TopAccess.
  For details, see the [Network Administrator's Guide].

Tip

You can select 2 locations to store the data from [MFP LOCAL], [REMOTE 1] and [REMOTE 2].

6 Select the file format.

- The SCAN folder is automatically created and the original data will be stored into this folder. If you select "TIFF (SINGLE)", an additional folder with the name you entered in step 4 is further created, and each page will be stored into this folder. You can access the original data with the client PC via network, by opening the FILE_SHARE folder in the equipment's hard disc.

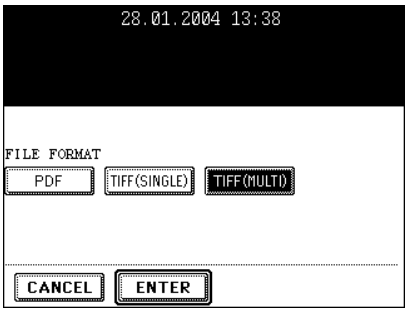

7 Press the [EDIT] button, set the original type and the scanning conditions, and then press the [ENTER] button.

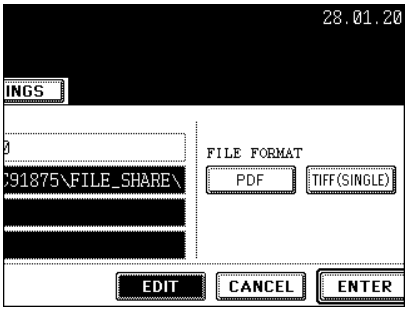

- Press the [Next] or [Prev] button to switch the screen and make necessary settings.

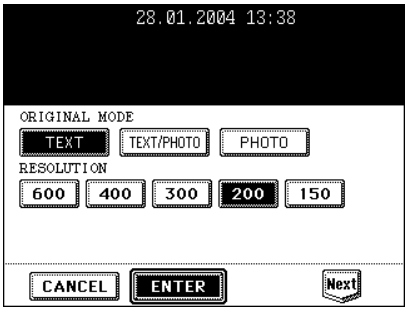

8 Press the [ENTER] button.

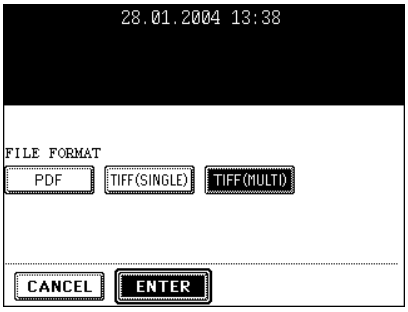

9 Press the [SCAN!] button.

Tip

If the [SCAN TO E-FILING] or the [SCAN TO E-MAIL] button is pressed to make the setting before pressing the [SCAN!] button, the specified 2 jobs can be performed simultaneously.

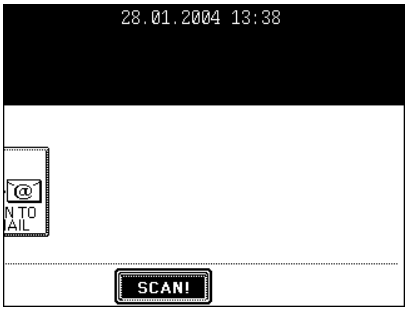

10 "To continue, place document on glass. And press Scan!" appears. If you want to finish scanning, press the [JOB FINISH] button.

- If you want to continue scanning, press the [SCAN!] button.
- When the original is set on the reversing automatic document feeder (optional) to be scanned in the Continuous Feed mode, this screen is not displayed.

Tips

- You can change the original size, type and scanning conditions by pressing the [EDIT] button for the next scanning.
- If you want to cancel the storage of the scanned data, press the [JOB CANCEL] button.

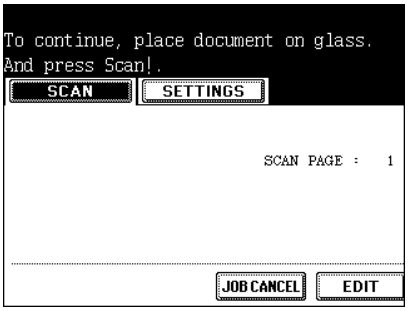

4. SCAN TO E-MAIL

In this function, the scanned data can be sent to the specified E-mail address as an attached file.
After finishing the setting for the E-mail transmission, the settings for SCAN TO E-FILING or SCAN TO FILE can be made and the data can be scanned simultaneously.

* To use SCAN TO E-MAIL, the configuration of the equipment needs to be set by the network administrator.
* For receiving an E-mail, see "3.RECEIVING INTERNET FAX" 📖 Page 187.

Note

To use SCAN TO E-MAIL function, ‘optional Printer kit (GM-1020) and optional Scanner upgrade kit (GM-3020)’, or ‘optional Printer/Scanner kit (GM-2020)’ is required.

1 Place the original(s).

- "2.SETTING ORIGINALS" 📖 Page 51
- If there is not enough space in the hard disc, the number of originals that can be scanned may be restricted. According to the network environment, available data amount may be restricted.

Tip

The reversing automatic document feeder (optional) enables consecutive scanning of more than one original.

2 Press the [SCAN] button on the control panel to enter the scan menu.

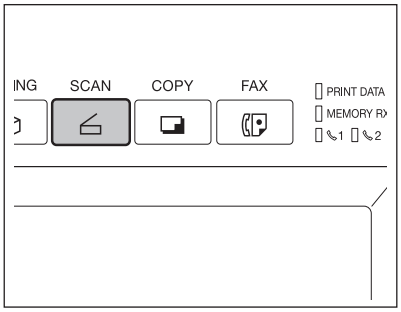

3 Press the [SCAN TO E-MAIL] button.

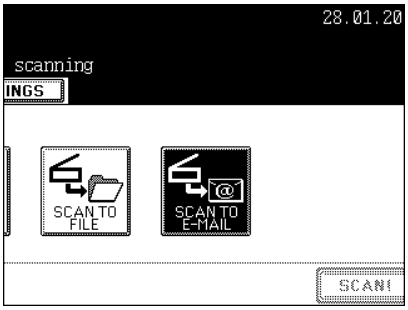

4 Press the [E-MAIL TO] button and select the address.

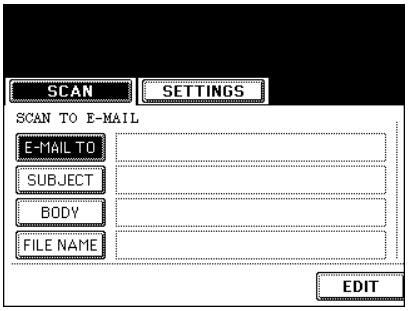

- Press the [E-MAIL ADDRESS] button when you want to enter the address directly with the soft keyboard.
  See steps 5 and 6 in "Direct Entry" 🕮 Page 173 for details.
- In the address book, select the address you want to send to.
- Select the address you want to send to after pressing the [GROUP] button.
  See steps 5 and 6 in "Group Entry" 🕮 Page 175 for details.
- Select the address you want to send to after pressing the [KNOWN ID] button.
  See steps 5 to 7 in "Searching by ID Number" 🕮 Page 177 for details.
- Select the address you want to send to after pressing the [SEARCH ADDRESS] button.
  See steps 5 to 9 in "Searching by Address" 🕮 Page 178 for details.
- Select the address registered in the LDAP (Lightweight Directory Access Protocol) server without using the address book in this equipment, after pressing the [SEARCH ADDRESS] button. (To enable this function, it is required to register the directory search name using TopAccess via network beforehand. See “Network Administrator's Guide” for details.)
  See steps 3 to 5 in "Searching Address Using LDAP Server" 🕮 Page 180 for details.

- In the address book, you can select 2 or more addresses. Also, you can combine the address book and group entry to select the address you want to send to.
- See the [User Functions Guide] for entering and setting the address.
- To return the SCAN TO E-MAIL menu from the address book, press the [RETURN] button.

5 Press the [SUBJECT] button and enter the subject of the E-mail.

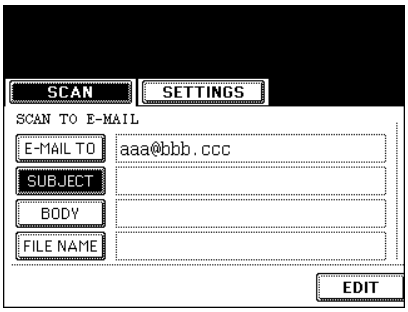

- A subject can contain up to 128 letters.
  "Setting Letters" 🕮 Page 30

6 Press the [BODY] button and enter the text body, etc.

- A body can contain up to 1,000 letters.

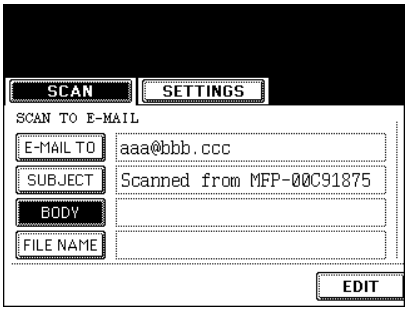

7 Press the [FILE NAME] button and name the scanned data.

- A file name can contain up to 45 letters.
  "Setting Letters" 📖 Page 30

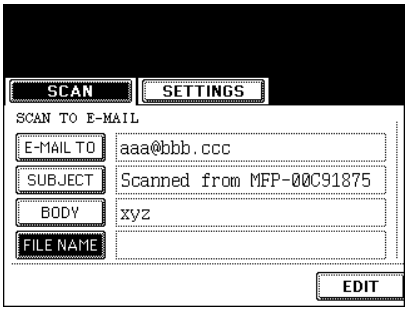

8 Select the file format.

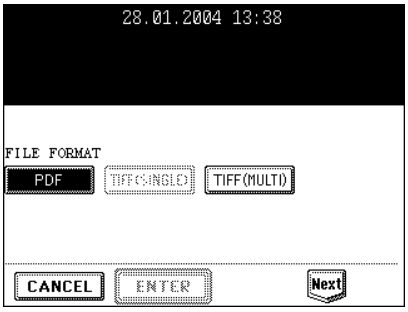

9 Press the [EDIT] button and set the original size and type.

- After step 9 is finished, press the [NEXT] button.

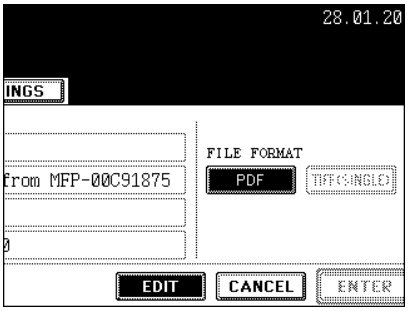

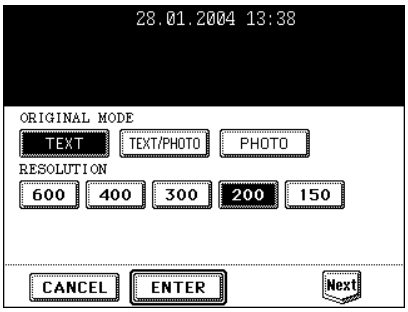

10 Set the size of the attached data.

- Image data are divided into some small blocks to be sent.
  FRAGMENT MESSAGE SIZE (KB): NONE, 64 KB, 128 KB, 256 KB, 512 KB, 1024 KB, 2048 KB
  Press the [Next] or [Prev] button to switch the screen and make necessary settings.

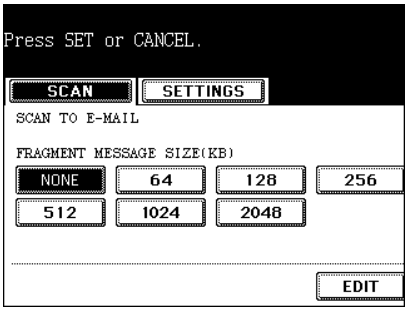

Tip

The volume of the high-resolution image data may be very large. When sending E-mail, be careful not to exceed the mail server capacity of both the sender and the receiver.

- If the software for E-mail is not able to divide the data properly, resend it after setting smaller fragment message size.
- If the data size exceeds the specified size, it is divided into the specified size to be sent.

11 Change the contents of FROM ADDRESS and FROM NAME as required, and then press the [ENTER] button.

- FROM ADDRESS and FROM NAME displays the senders address and name set by the network administrator with TopAccess when the equipment is installed.
- The contents of FROM ADDRESS and FROM NAME are sent to the receiver as the information of the sender.
- Entering Letters "Setting Letters" 📖 Page 30

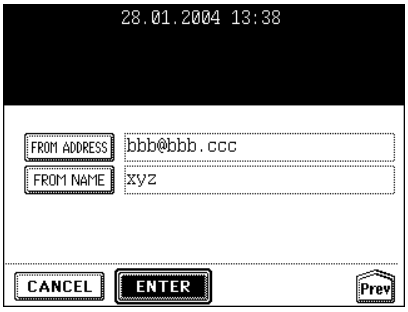

12 Press the [SCAN!] button.

- If the [SCAN TO E-FILING] or the [SCAN TO FILE] button is pressed to make the setting before pressing the [SCAN!] button, the specified 2 jobs can be performed simultaneously.

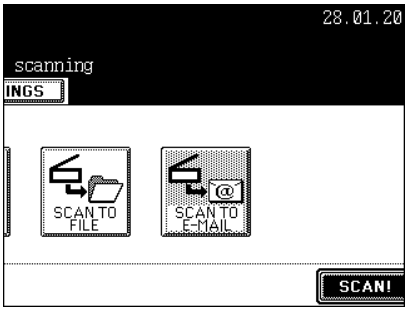

8. INTERNET FAX

1. INTERNET FAX 168
2. SENDING INTERNET FAX 170
   Setting the Transmission Conditions 170
   Specifying the Recipients 173
   Advanced Function 184
3. RECEIVING INTERNET FAX 187

1. INTERNET FAX

Internet Fax function provides the ability to transmit a scanned original as an E-mail, with an attached TIFF-S file. Since an Internet line is used instead of a phone line, the communication cost can be reduced.
In this function, an E-mail address is specified in place of a phone number to transmit a scanned original to the Internet Fax equipment or the client computers.
When the Internet Fax is received, it is automatically output like regular Fax.

* The administrator needs to configure the network settings for Internet Fax to function. See the [Network Administrator's Guide].

Note

To use Internet Fax function, 'optional Printer kit (GM-1020) and optional Scanner upgrade kit (GM-3020)', or 'optional Printer/Scanner kit (GM-2020)' is required.

Precaution for Internet Transmission

Transmissions using the Internet Fax function are the same as E-mail transmissions.
Before you start to use the Internet Fax function, it is recommended that you read this section and understand the precautions for Internet transmission.

- The Internet Fax sends a document to the E-mail server of Internet and it does not send via the PSTN* alike regular facsimile transmissions.
- Internet transmission has low security. It is recommended that you use regular facsimile transmission when confidential document is sent.
- It may take a considerable amount of time for the recipient to receive the document because of the line traffic in the Internet.
- If the document being transmitted has a large amount of data, it may not be successfully sent due to the configuration of the E-mail server.

* PSTN (Public Switched Telephone Network) is a global telephone system enables to communicate in worldwide using copper wires to transmit analog data.

Internet Fax Transmission Overview

The following is an overview of the various transmissions that can be performed using the Internet Fax function.

- Internet Fax to Internet Fax
  The equipment can send a document to another Internet Fax equipment through the Internet or Intranet. The document is sent as an E-mail.

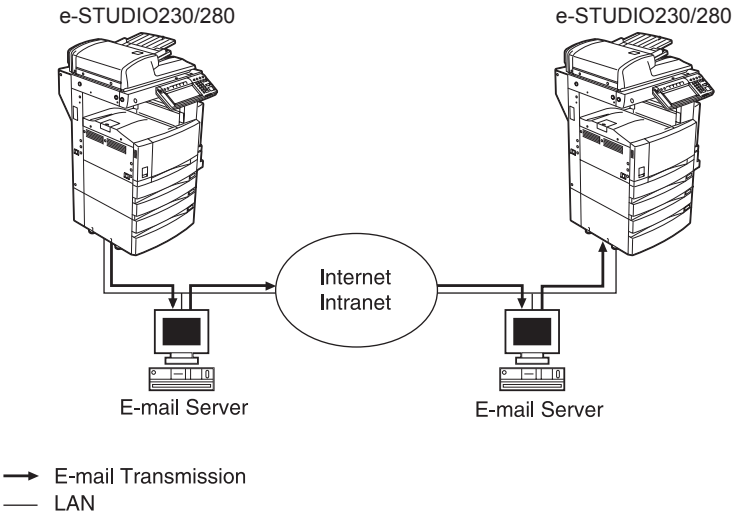

- Internet Fax to/from Client Computers
  The equipment can send a document as an E-mail to client computers through the Internet or Intranet. The client computers can send an E-mail to the equipment as well.

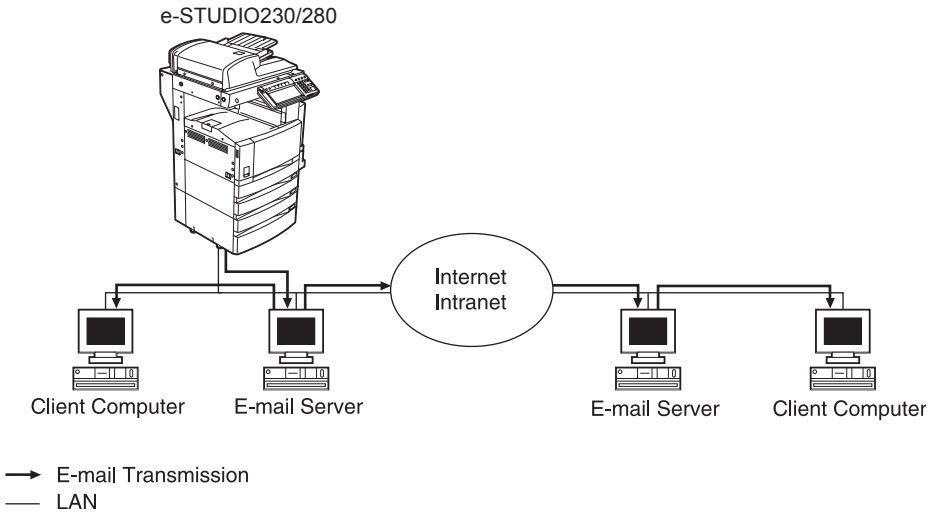

Note

- The client computer receives TIFF-S images when the equipment sends a document using the Internet Fax function.
- The equipment can only print out text files and TIFF images. When sending E-mail from the client computer to this equipment using the E-mail application, files other than text or TIFF images cannot be sent. For Available Format, see "Receiving Modes" 📖 Page 187.

Setting the Transmission Conditions

Set the resolution, the image quality mode, exposure, original size, subject and body of originals. Whenever a transmission is completed, the condition will automatically return to the default setting. The following describes the setting of each item.

- **Resolution:**
  Set the resolution before you scan the original to be sent.
  STANDARD, FINE, U-FINE

* For the Internet Fax, the original is sent in FINE though U-FINE is selected.

- **Image Quality Mode:**
  Set the image quality mode before you scan the original to be sent.
  TEXT, PHOTO/TEXT, TEXT

* The transmission time may be longer than usual in case the PHOTO/TEXT or the PHOTO mode is selected.

- **Exposure:**
  Set the image density according to the contrast of the original to be sent.
  AUTO, MANUAL (11 steps)

* In the automatic exposure mode, the copier automatically judges the contrast of the original, and selects the optimum contrast.

* In the manual exposure mode, you can adjust the contrast manually in 11 steps.

- **Original Size:**
  Set the scanning size of the original to be sent.
  AUTO: The size of the original is automatically determined before it is scanned.
  SPECIFIED SIZE: The original is scanned in the specified size regardless of its actual size. Use this mode when you are using non-standard size paper or you want to limit the area of the original to sent.

* When originals are placed in the reversing automatic document feeder, they are scanned in the AUTO mode. You can specify the size only when the original is placed on the original glass.

* For the Internet Fax, A4 size original is sent in the same size as the original. Original larger than this size is reduced to A4 to be sent. Original smaller than this size is sent in A4 without being enlarged.

- **Subject/Body:**
  Subject and body can be added to the originals to be sent.

1 **Press the [FAX] button on the control panel.**

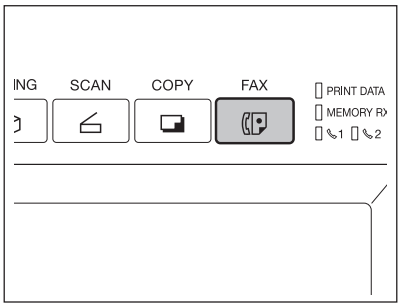

2 **Press the [ADDRESS] button to display the address menu, and then press the [OPTION] button.**

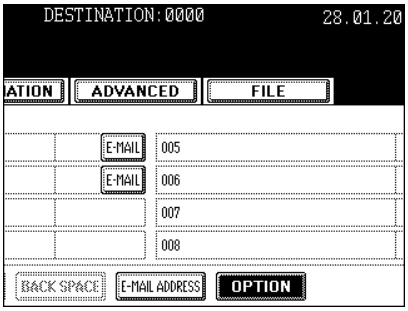

8

3 After selecting each transmission condition, press the [ENTER] button.

- Press the [Prev] or [Next] button to switch the menu.
- The buttons shaded in the menu on the right are the default settings.

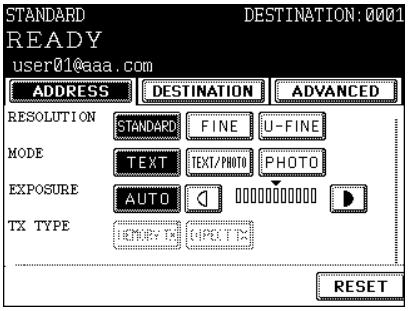

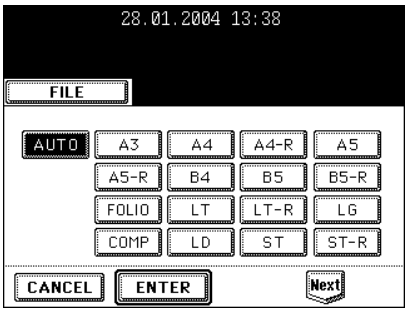

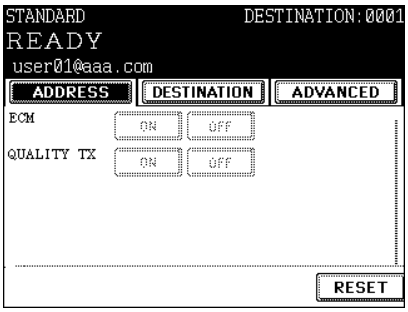

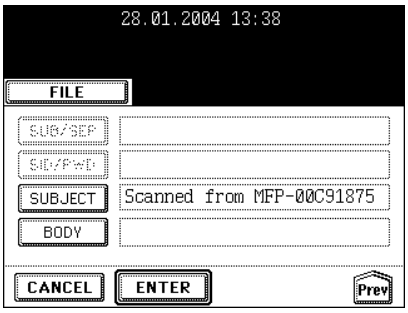

8

Specifying the Recipients

- Direct entry: You can enter the E-mail address directly with the letter entry menu to send the original.
- Address book entry: You can specify the other party that has been registered into the address book.
- Group entry: Originals are sent to the recipients that have been already specified as a group at a time.
- Multi-address transmission: The same original can be sent to 2 or more recipients in a single operation.

Direct Entry

1 Press the [FAX] button on the control panel.

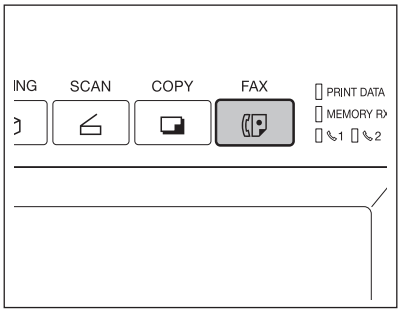

2 Place the original(s).

- "2.SETTING ORIGINALS" 📖 Page 51

3 Press the [OPTION] button and set the transmission conditions.

- "Setting the Transmission Conditions" 📖 Page 170

4 Set the advanced function as required.

- "Advanced Function" 📖 Page 184

5 Press the [ADDRESS] button to display the address menu, and then press the [E-MAIL ADDRESS] button.

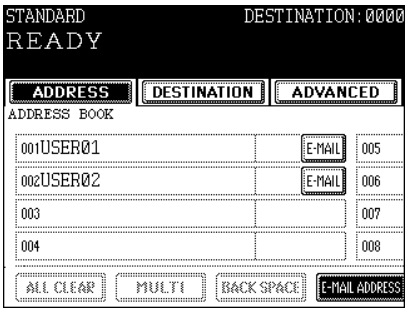

6 Enter the E-mail address.

- Entering letters "Setting Letters" 📖 Page 30

7 Press the [START] button.

8

Address Book Entry

- It is necessary to previously register the address book.

See the [User Functions Guide] for registering the address book.

1 Press the [FAX] button on the control panel.

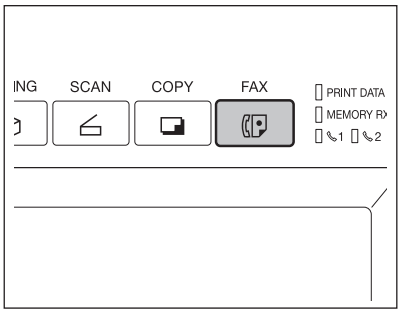

2 Place the original(s).

- "2.SETTING ORIGINALS" 🕮 Page 51

3 Press the [OPTION] button and set the transmission conditions.

- "Setting the Transmission Conditions" 🕮 Page 170

4 Set the advanced function as required.

- "Advanced Function" 🕮 Page 184

5 Press the [ADDRESS] to display the address menu.

- 1 screen can show 8 destinations.
  To view the destinations not displayed on the screen, press the [Prev] or [Next] button to scroll through the screens.
- If a group list is displayed, press the [ADDRESS BOOK] button.

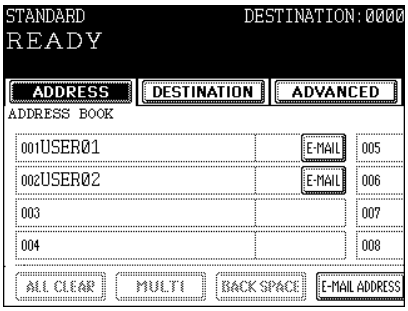

6 Press the [E-MAIL] button of destination.

- You can search for the recipient by ID number or Address.
- Searching by ID Number "Searching by ID Number" 🕮 Page 177
  Searching by Address "Searching by Address" 🕮 Page 178

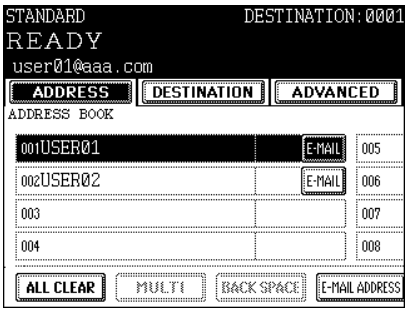

7 Press the [START] button.

Group Entry

- It is necessary to previously enter the recipients into the group.

See the [User Functions Guide] for creating groups.

1 Press the [FAX] button on the control panel.

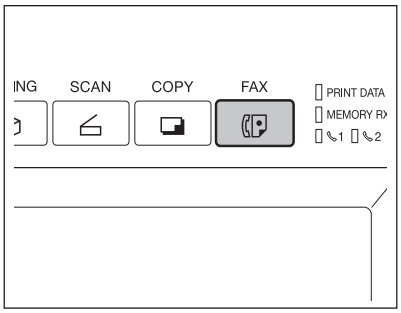

2 Place the original(s).

- "2.SETTING ORIGINALS" 📖 Page 51

3 Press the [OPTION] button and set the transmission conditions.

- "Setting the Transmission Conditions" 📖 Page 170

4 Set the advanced function as required.

- "Advanced Function" 📖 Page 184

5 Press the [ADDRESS] to display the address menu, and then press the [GROUP] button.

- 1 screen can show 8 destinations.
  To view the destinations not displayed on the screen, press the [Prev] or [Next] button to scroll through the screens.

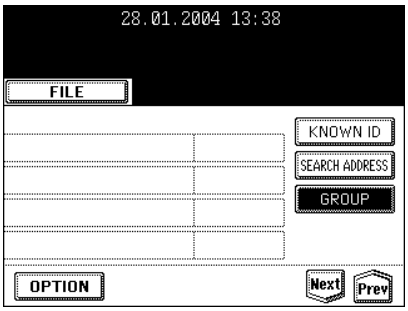

6 Press the recipient group you want to send to. To check the specified group member, press the [CONTENTS] button.

- You can search for the recipient by ID number or group.
- Searching by ID Number "Searching by ID Number" 📖 Page 177
  Searching by Group "Searching by Address" 📖 Page 178

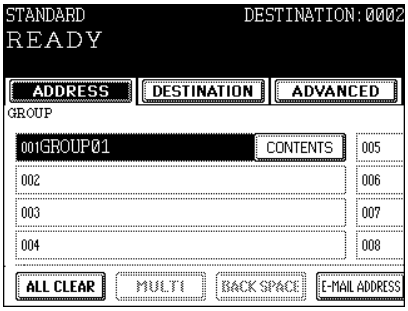

7 Press the [START] button.

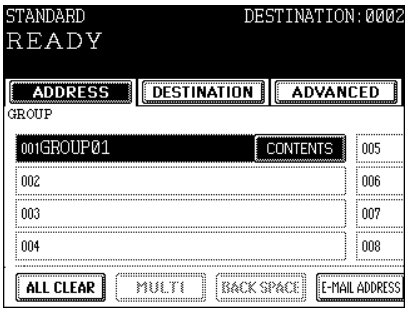

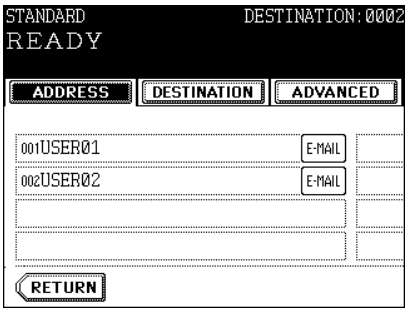

Searching by ID Number

When selecting the recipient entered in the address and the group, you can immediately search them by the ID number on the screen.

1 Press the [FAX] button on the control panel.

2 Place the original(s).

- "2.SETTING ORIGINALS" 🕮 Page 51

3 Press the [OPTION] button and set the transmission conditions.

- "Setting the Transmission Conditions" 🕮 Page 170

4 Set the advanced function as required.

- "Advanced Function" 🕮 Page 184

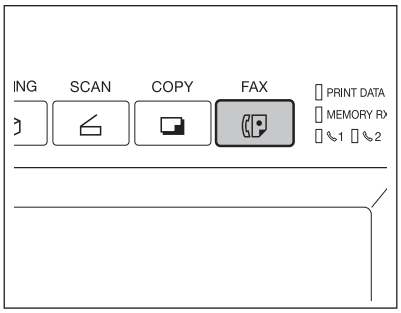

5 Press the [ADDRESS] button to display the address menu, and then press the [KNOWN ID] button.

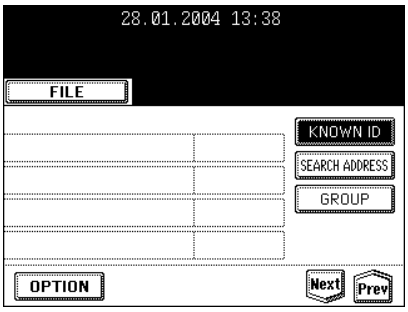

6 Key in the desired ID number using the digital keys, and press the [ENTER] button.

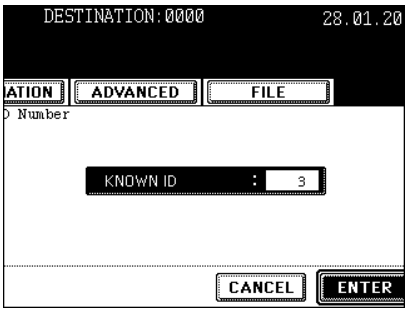

7 Press the [E-MAIL] button of destination.

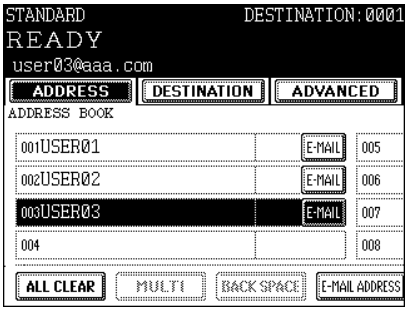

- 1 screen can show 8 destinations.
  To view the destinations not displayed on the screen, press the [Prev] or [Next] button to scroll through the screens.

Tips

- To continue searching by the ID number, press the [KNOWN ID] button.
- To continue searching by the address ("Searching by Address" 📖 Page 178), press the [SEARCH ADDRESS] button.

8 Press the [START] button.

Searching by Address

When selecting the recipient entered in the address and group, pressing a letter button displays the recipient whose names start with the letter on the screen, which makes it easy to choose the desired recipient.

1 Press the [FAX] button on the control panel.

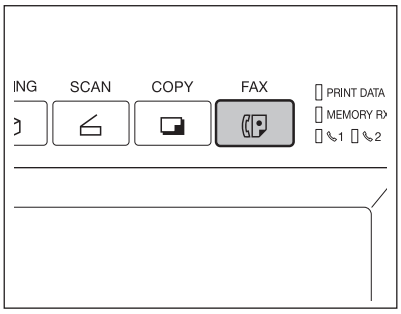

2 Place the original(s).

- "2.SETTING ORIGINALS" 📖 Page 51

3 Press the [OPTION] button and set the transmission conditions.

- "Setting the Transmission Conditions" 📖 Page 170

4 Set the advanced function as required.

- "Advanced Function" 📖 Page 184

5 Press the [ADDRESS] button to display the address menu, and then press the [SEARCH ADDRESS] button.

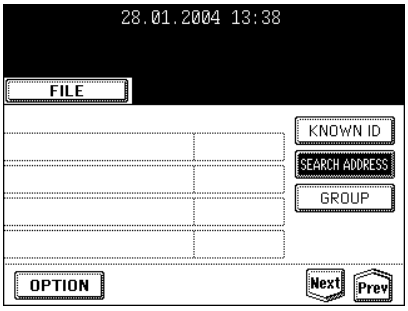

6 Press the button of item that you want to search.

7 Enter the letter or the number, and then press the [ENTER] button.

- Entering Letters "Setting Letters" 📖 Page 30

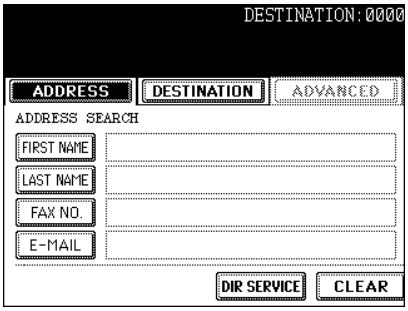

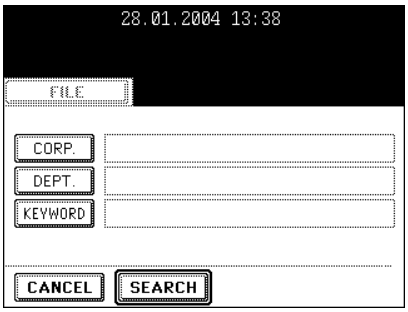

8 Press the [SEARCH] button.

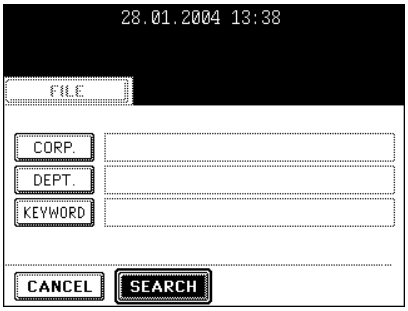

9 Press the [E-MAIL] button of destination, and then press the [ENTER] button.

- 1 screen can show 8 destinations.
  To view the destinations not displayed on the screen, press the [Prev] or [Next] button to scroll through the screens.

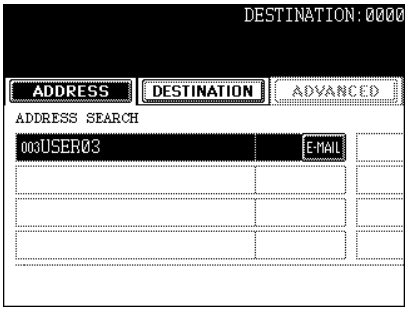

Tips

- To continue searching by the address, press the [SEARCH ADDRESS] button. (See Step 5.)
- To continue searching by the ID number ("Searching by ID Number" 📖 Page 177), press the [KNOWN ID] button. (See Step 5 of “Searching by ID Number”)

10 Press the [START] button.

Searching Address Using LDAP Server

Without using the address book in this equipment, you can select the recipients registered in the address book of the LDAP (Lightweight Directory Access Protocol) server via network. In this case, it is required to register the directory search name using TopAccess via network beforehand. See the [Network Administrator's Guide] for details.

1 Press the [FAX] button on the control panel.

- "Setting the Transmission Conditions" 📖 Page 170

2 Place the original(s).

- "2.SETTING ORIGINALS" 📖 Page 51

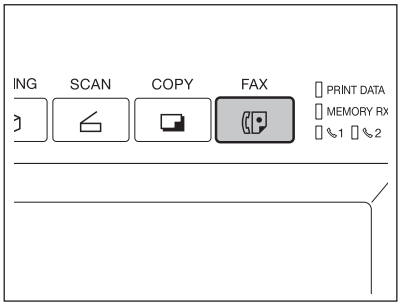

3 Press the [ADDRESS] button to display the address menu, and then press the [SEARCH ADDRESS] button.

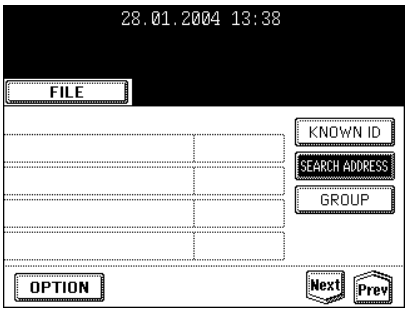

4 Press the [DIR SERVICE] button.

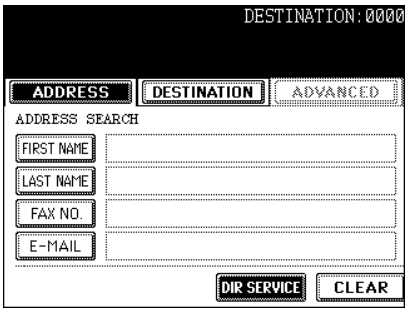

5 Press the directory search name that you want to search, and then press the [ENTER] button.

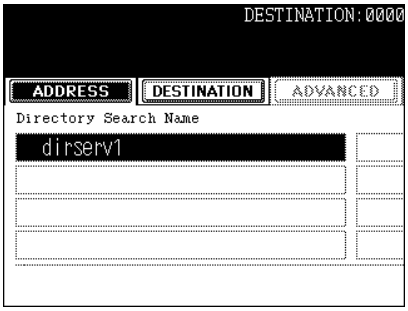

6 Search the recipient, and then send it.

- Perform steps 6 to 10 in "Searching by Address" 📖 Page 178.
  * Searching using the LDAP server is available for Fax number and E-mail.

Multi-address Transmission

The multi-address transmission function allows you to send the same original to 2 or more recipients in a single operation, which can be done by combining direct, address book and group entry.
The following show the number of destinations that can be entered according to how the recipient is specified:

- By direct entry only: 400 destinations
- By address book entry only: 400 destinations
- By group entry only: 200 groups (400 destinations per 1 group)
- By combining direct, address book and group entry: 400 destinations

1 Press the [FAX] button on the control panel.

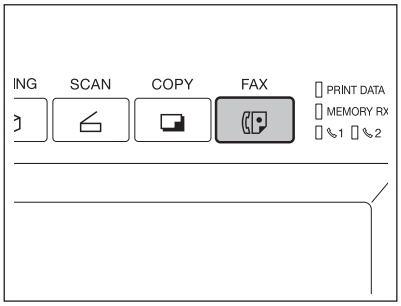

2 Place the original(s).

- "2.SETTING ORIGINALS" 📖 Page 51

3 Press the [OPTION] button and set the transmission conditions.

- "Setting the Transmission Conditions" 📖 Page 170

4 Set the advanced function as required.

- "Advanced Function" 📖 Page 184

5 Specify the recipient.

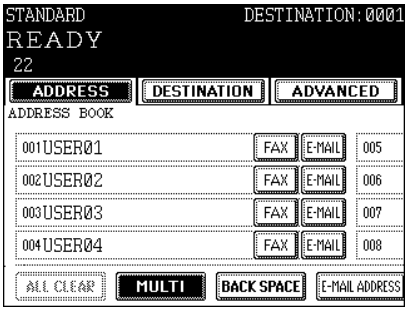

- To continuously enter E-mail address after having specified them by means of entering directly, press the [MULTI] button, and then enter the next address. You do not need to press the [MULTI] button for the address book or the group entry.
- The selected destinations can be confirmed by selecting the [DESTINATION] button. "Confirming the Destinations" 📖 Page 182

Tips

- To cancel the other party's address during the direct entry, press the [CLEAR] button on the control panel.
- To cancel the other party specified by the address or the group, press the highlighted button again. To cancel all specified recipient, press the [ALL CLEAR] button.
- To cancel the other party specified by the direct entry, press the [DESTINATION] button to enter the destination menu, and then cancel it. "Confirming the Destinations" 📖 Page 182

6 Press the [START] button.

Confirming the Destinations

8

After specifying of the multiple destinations by such as Multi-address Transmitting, you can confirm these addresses in the list by pressing the [DESTINATION] button. Also, you can delete the addresses by pressing the [DELETE] button.

1 Press the [DESTINATION] button.

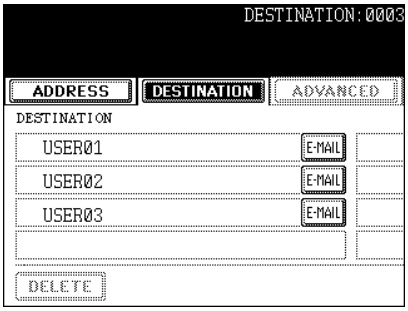

- 1 screen can show 8 destinations.
- To view destinations which are not displayed on the screen, press the [Prev] or [Next] button to scroll through the screens.

2 **Select the destination that you want to delete, and then press the [DELETE] button.**

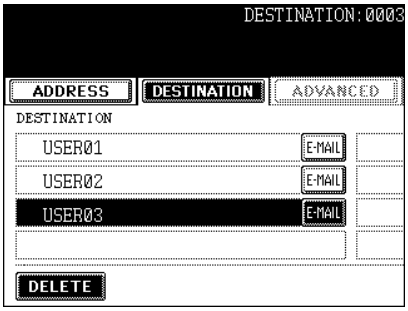

Advanced Function

The following advanced function can be used.
- 2-sided original TX: 2-sided originals can be sent using the reversing automatic document feeder.
- Priority TX: You can send originals prior to the reserved transmissions.

Sending 2-sided Originals

You can scan and send 2-sided originals using the reversing automatic document feeder (optional). Whenever a transmission is completed, the condition will automatically return to the default setting.

Tip

To send the 2-sided originals, the reversing automatic document feeder (optional) needs to be installed in this equipment.
- Setting originals when sending LT/A4 2-sided originals
  To set the originals on the reversing automatic document feeder (optional), change the direction of original feeding depending on the bound position.
  1: 2-sided originals bound with open to left
  2: 2-sided originals bound with open to top

1

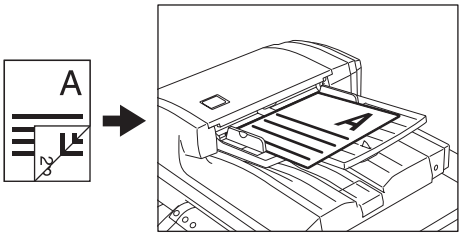

2

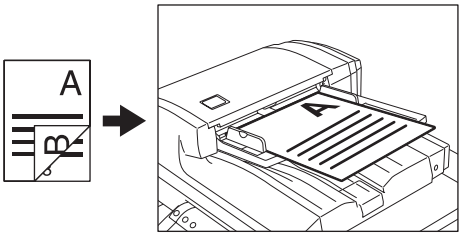

1 Press the [FAX] button on the control panel.

2 Place the original(s).

- "2.SETTING ORIGINALS" 📖 Page 51

3 Press the [OPTION] button and set the transmission conditions.

- "Setting the Transmission Conditions" 📖 Page 170

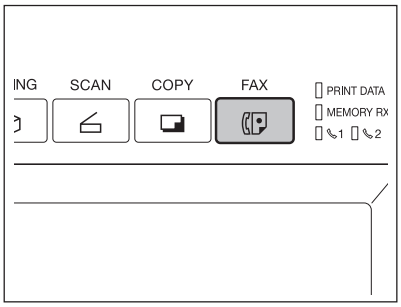

4 **Press the [ADVANCED] button to display the advanced menu, and then press the [2-SIDED SCAN] button.**

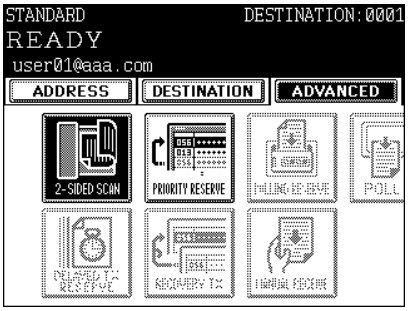

5 **Select the original type either the [BOOK] or [TABLET] button, and then press the [ENTER] button.**

6 **Specify the recipient.**

- "Specifying the Recipients" 📖 Page 173

7 **Press the [START] button.**

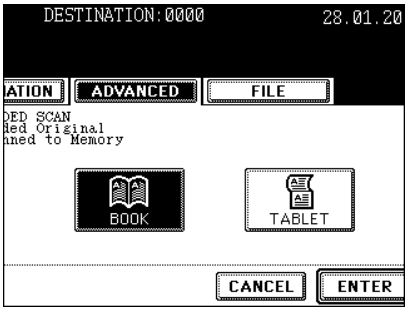

Priority Transmission

Priority TX allows you to execute a transmission prior to the other reserved transmissions.

- You can use 'Direct Entry' and 'Address Dialing' to specify the recipients.
- Priority TX can be performed only for 1 transmission.

1 **Press the [FAX] button on the control panel.**

2 **Place the original(s).**

- "2.SETTING ORIGINALS" 📖 Page 51

3 **Press the [OPTION] button and set the transmission conditions.**

- "Setting the Transmission Conditions" 📖 Page 170

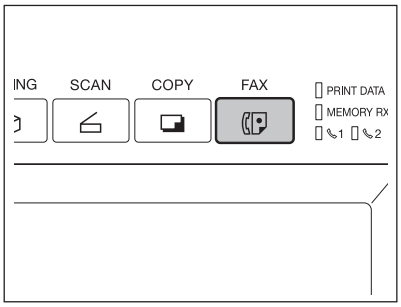

4 **Press the [ADVANCED] button to display the advanced menu, and then press the [PRIORITY RESERVE] button.**

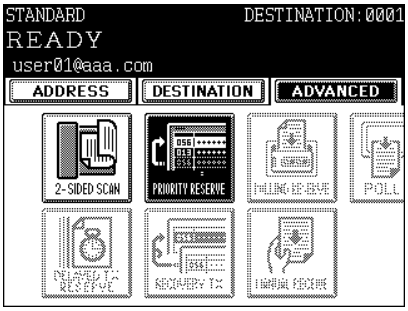

5 **Press the [ENTER] button.**

6 **Specify the recipient.**

- "Specifying the Recipients" 🕮 Page 173

7 **Press the [START] button.**

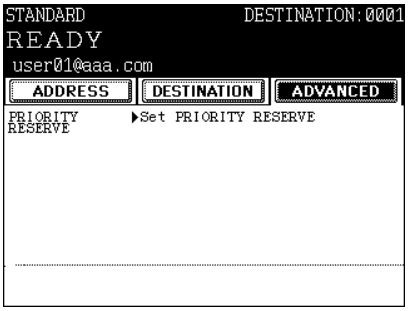

8

Receiving Modes

The methods to receive an Internet Fax vary according to the type of protocols used for receiving an E-mail.

When POP3* is selected for the Receive Mode:

- The equipment accesses the E-mail server at specified intervals to check whether any E-mail has been delivered. If an E-mail has been delivered, the equipment will automatically retrieve and print out the E-mail.
- When the [CHECK E-MAIL] button is pressed, the equipment manually accesses the E-mail server to check whether any E-mail has been delivered. If an E-mail has been delivered, the equipment receives and prints out the E-mail.

* POP (Post Office Protocol) is a protocol to retrieve the E-mail message from a mail server. Most E-mail applications use POP. POP3 is a newer version of the POP protocol.

When SMTP* is selected for Receive Mode

- When SMTP is selected for Receive Mode, the [CHECK E-MAIL] button is disabled. As soon as an E-mail is received by the E-mail server via the internet, the mail server will transfer the E-mail to this equipment. For more details, see “Receiving from SMTP server”.

* SMTP (Simple Mail Transfer Protocol) is a server protocol to transfer the E-mail message between servers. Most E-mail system uses SMTP to transfer the E-mail messages over the Internet.

For how to set the receiving mode and how to print the received Internet Fax, see the [Network Administrator's Guide]

Note

Available Format:
The TIFF-FX images, TIFF images scanned by the scanner and the text data can be printed. In addition, the resolution of the TIFF-FX image must be 8 x 3.85, 8 x 7.7 or 8 x 15.4 (dot/mm). The resolution of the TIFF images scanned by the scanner must be 200 x 100, 200 x 200, 200 x 400, 400 x 400 or 600 x 600 (dpi). If the received E-mail contains files that are not the ones described above, an error message will be displayed in the receive log.
To avoid such a case, you can print the report when an error occurs for E-mail printing and also forwarding this E-mail to another E-mail address can be set.
If you want to print the report when an error occurs for E-mail printing, set up “Enable Print E-mail Error”.
If you want to forward the E-mail to another E-mail address when an error occurs, set up “Enable E-mail Error Forward” and “E-mail Error Transfer Address”.
See the “Setting up the E-mail Print” in the [Network Administrator’s Guide].

Receiving from POP3 Server

To automatically receive the Internet Fax from the E-mail server, set up the “POP3 Time”.
Checking whether any E-mail has been delivered at specified intervals will be performed automatically. (Default setting: every 5 minutes)
For setting the “POP3 Time”, see the [Network Administrator's Guide].

1 Press the [USER FUNCTIONS] button on the control panel.

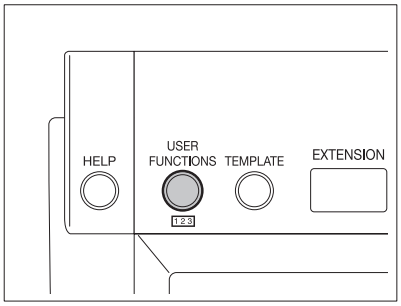

2 Press the [USER] button, and then press the [CHECK E-MAIL].

- Checking whether any E-mail has been delivered starts.

3 Checking completes.

- If the Internet Fax is received, “RECEIVING E-mail” appears on the screen upper right. Next, “NEW E-mail RECEIVED” appears for 2 seconds. Then, printing the Internet Fax starts.
- If no Internet Fax is received, “CURRENTLY NO E-mail” appears on the screen upper right for 2 seconds.

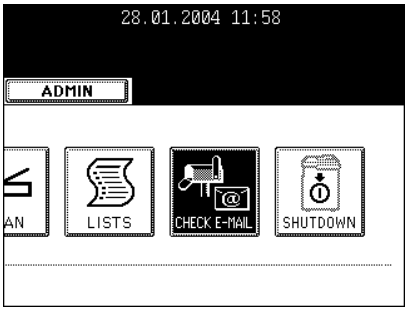

Receiving from SMTP Server

Once an E-mail is sent to this equipment or an E-mail is delivered through the Internet, this equipment will automatically retrieve E-mail from the SMTP server using the SMTP transmission.
When the Receive Mode is set to SMTP, the sub-domain for this equipment must be assigned at the SMTP server to receive E-mail or enable the Offramp Gateway transmission. In this case, this equipment works as one of the E-mail servers.
When the SMTP server receives an E-mail intended for the sub-domain of this equipment, the SMTP server will transfer the E-mail to this equipment using the SMTP transmission. If an E-mail is sent to the E-mail address of this Internet Fax equipment, it will print the E-mail out.
Please see the OFFRAMP GATEWAY SETUP (See the [Network Administrator’s Guide]) for further details.

Note

When the Receive Mode is set to SMTP the equipment cannot retrieve an E-mail from the mail server manually.

9. JOB STATUS

1. JOB STATUS 190
2. PRINT JOB LIST 191
3. PROOF PRINT JOB 194
4. PRIVATE PRINT JOB 196
5. WHEN USING THE DEPARTMENT CODES 198
6. CONFIRMING THE STATUS OF FAX/INTERNET FAX JOB 200
7. CONFIRMING THE STATUS OF SCAN 201
8. LOG LIST 202
9. ADDRESS REGISTRATION FROM LOG LISTS 205
10. PRINTING SEND/RECEIVE LOG LIST OF FAX 207
11. STATUS 208
12. ERROR CODE 210

1. JOB STATUS

[JOB STATUS] enables:

- To show the list of printing, Internet Fax and scanning jobs in the waiting status
- To show the print, transmission, reception, and scan logs
- To perform the execution, pause, deletion and movement of the waiting jobs
- To print the send and receive logs

4 jobs are listed on each screen (page). The jobs for 250 pages (1,000 jobs) are available to display. Press the [Next] button to display the 5th job or later, and press the [Prev] button to display the previous page.

Note

- Jobs concerning Fax are available when ‘optional Fax board (GD-1150)’ is installed.
- Jobs concerning scan, Internet Fax, or E-mail are available when ‘optional Printer kit (GM-1020) and optional Scanner upgrade kit (GM-3020)’, or ‘optional Printer/Scanner kit (GM-2020)’ is installed.
- Print jobs received from the client PC via network are available when ‘optional Printer kit (GM-1020)’, or ‘optional Printer/Scanner kit (GM-2020)’ is installed.

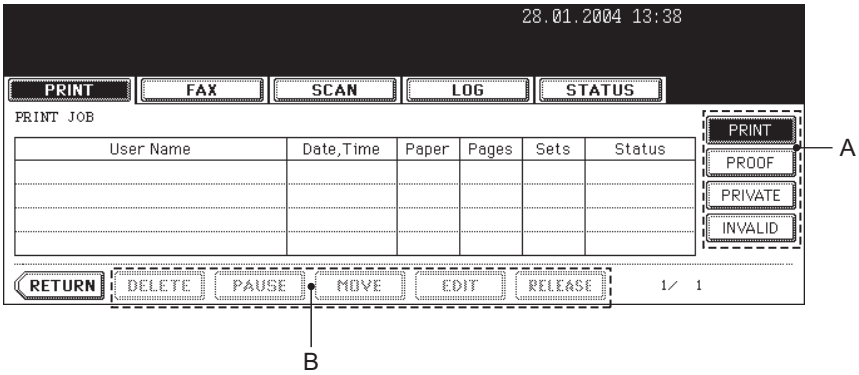

- Items of list

  User Name: Name of registered user
  Date, Time: Date and time the job was received
  Paper: Paper size to be printed
  Pages: Number of pages to be printed
  Sets: Number of sets to be printed
  Status: Status of jobs or specified time for Delayed TX Reservation

- Buttons

  The display of buttons (B) are changed by selecting a job from the list. Buttons (A) select the type of print jobs to view.

2. PRINT JOB LIST

Print Job displays the status of copy jobs and print jobs transmitted between the equipment and network controller, and perform the deletion, pause, movement and print of the jobs.
Press the [Next] button to display the 5th job or later, and press the [Prev] button to display the previous page.

Deleting a Job

1 Press the [JOB STATUS] button on the control panel to display the JOB STATUS screen.

- Displayed screen is the print job list screen.

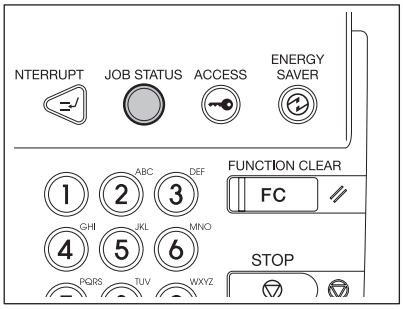

2 Press the job on the list you want to delete.

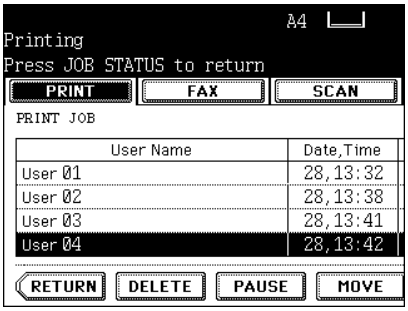

3 Press the [DELETE] button.

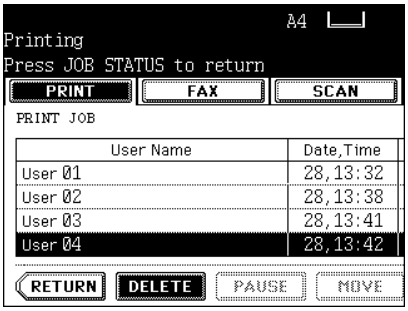

4 **“Delete OK?” appears. Press the [DELETE] button to delete the job.**

Pause/Resume

1 **Press the user name on the list you want to interrupt.**

2 **Press the [PAUSE] button.**

3 **To resume the job, press the [RELEASE] button.**

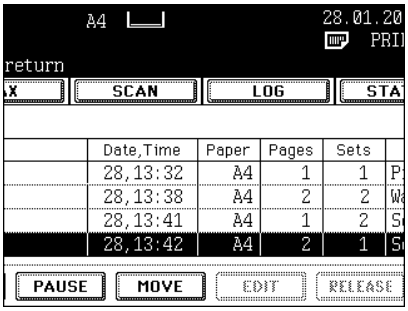

Moving a Print Job

1 Press the user name on the list you want to move.

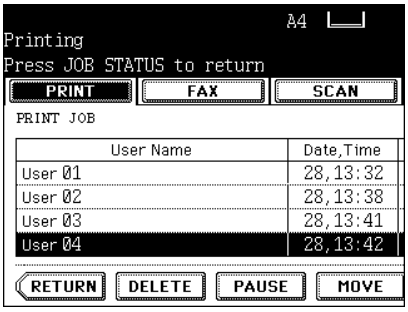

2 Press the [MOVE] button.

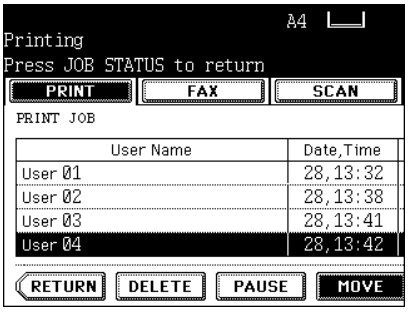

3 Specify the position of the order.

- (Ex.)
  Press the 1st user name to move the target job to the 2nd.

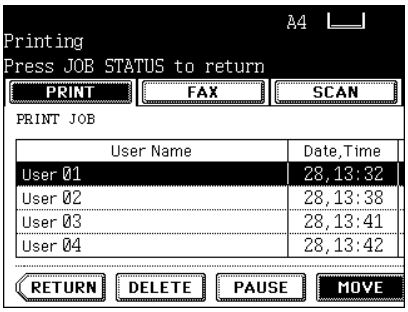

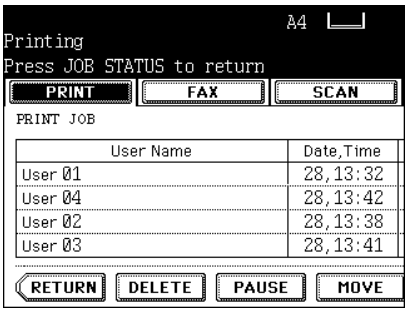

3. PROOF PRINT JOB

This function performs the proof print when the [PROOF] button is previously specified with the application. The print job specified for proof print is listed. 1 set is printed as a proof print before the specified number of sets are printed. After it completes, remaining print job is performed as the normal print job. In addition, before performing as the normal print job, changing the number of sets and deleting a job are available.

* For the Proof print, see the [Print Guide].

Performing the Proof Print

1 Press the [PROOF] button.

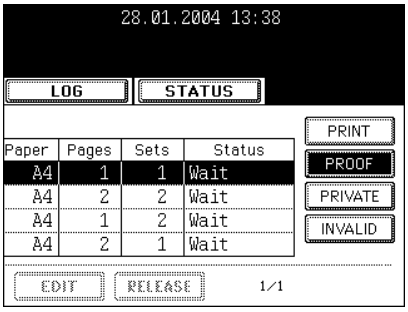

2 Proof print job list is displayed. Press the user name on the list you want to print.

- If the relevant job is not displayed, press the [Next] or [Prev] button to switch the screen.

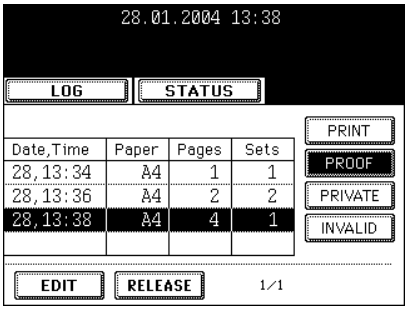

3 Press the [RELEASE] button. The job is moved to the normal print job to print it.

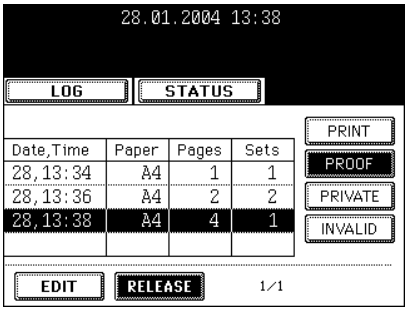

Tip

After confirming the printed paper of the proof print, press the [EDIT] button and key in the desired number to change the number of sets. And then press the [RELEASE] button to continue the normal print job.

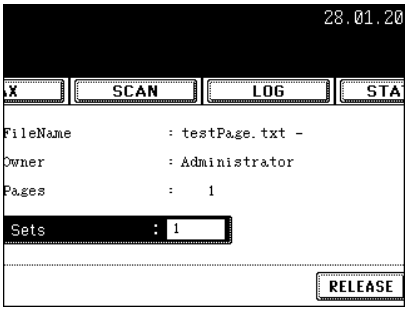

Deleting a Job

1 Press the [PROOF] button.

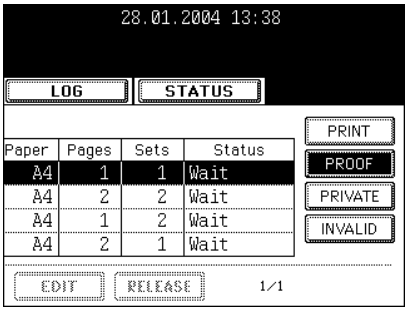

2 Proof print job list is displayed. Press the user name on the list which you want to delete.

3 Press the [DELETE] button.

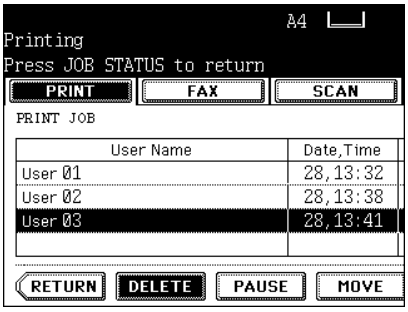

4 "Delete OK?" appears. Press the [DELETE] button to delete the job.

4. PRIVATE PRINT JOB

Private print enables to print the desired documents by entering the password which has been set on the application.

* For the Private print, see the [Print Guide].

Private Print

1 Press the [PRIVATE] button to display the private print job list.

2 Press the user name on the list you want to start with.

- If the relevant job is not displayed, press the [Next] or [Prev] button to switch the screen.

3 Press the [RELEASE] button.

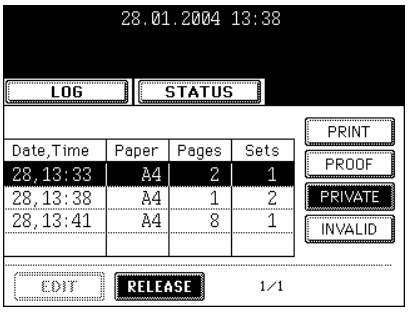

4 Key in the password.

5 Press the [ENTER] button.

- The private print job is moved to the print job list to start printing.

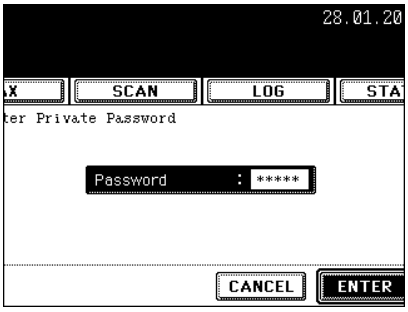

Deleting a Private Print

1 **Press the [PRIVATE] button to display the private print job list.**

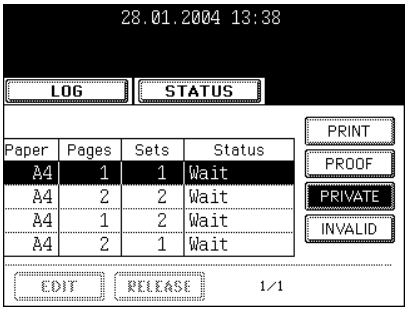

2 **Press the user name on the list you want to delete.**

3 **Press the [DELETE] button.**

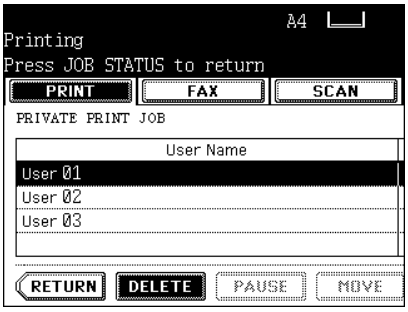

4 **"Delete OK?" appears. Press the [DELETE] button to delete the job.**

Jobs sent to the equipment without a Department Code or not a registered Department Code will appear in the Invalid Queue of Job status.

To Restore the Invalid Code (print error) to the Normal Print

1 Press the [INVALID] button to display the list.

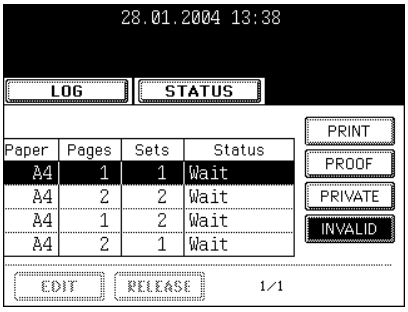

2 Press the user name on the list you want to print.

3 Press the [RELEASE] button.

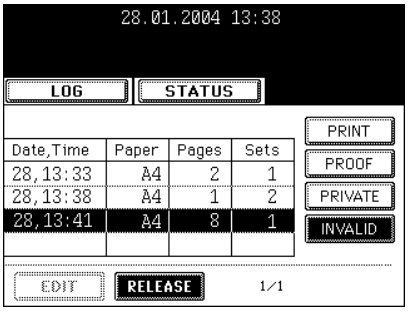

4 The department code entry screen is displayed. Key in the correct department code.

5 Press the [ENTER] button.

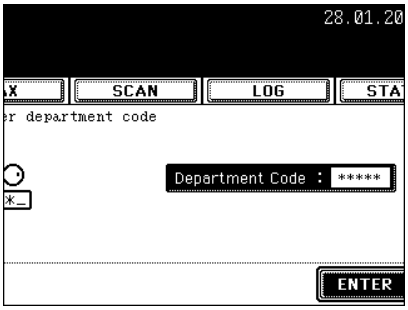

Deleting a Job from the List

1 **Press the [INVALID] button to display the list.**

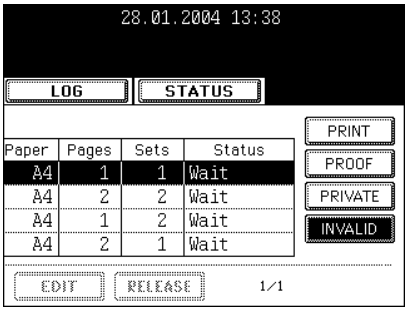

2 **Press the user name on the list you want to delete.**

3 **Press the [DELETE] button.**

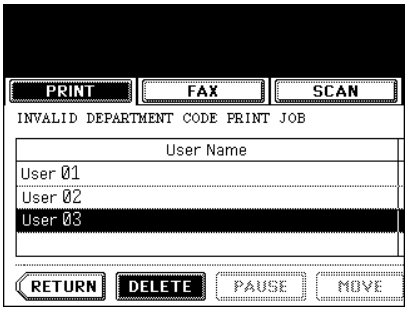

4 **"Delete OK?" appears. Press the [DELETE] button to delete the job.**

6. CONFIRMING THE STATUS OF FAX/INTERNET FAX JOB

Fax (optional)/Internet Fax (optional) JOB displays its status and allows the deletion or releasing of a job. 4 jobs are listed on each screen (page). The jobs for 250 pages (1,000 jobs) are available to display. Press the [Next] button to display the 5th job or later, and press the [Prev] button to display the previous page.

* For the Fax function, see the [Network Fax Guide].

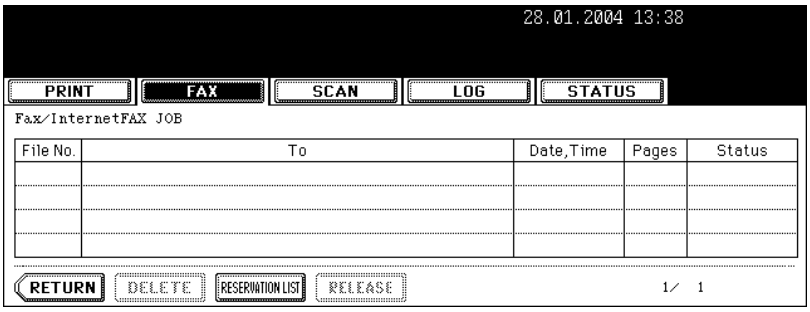

- Items of list
  File No.: Number of accepted job order
  To: Recipient
  Date, Time: Date and time at the time of registration
  Pages: Number of pages to be sent
  Status: Status of jobs

- Buttons
  [Delete]: The job is deleted when this button is pressed after transmission job is selected.
  [RESERVATION LIST]: To print the pending job list (including Delayed TX Reservation job), press this button.
  [RELEASE]: The button becomes active when the job for Delayed TX Reservation (Fax only) is selected. Pressing this key will send the Delayed TX.
  To cancel the Delayed TX Reservation, press this button.

Tip

See the [Operator's Manual for Facsimile Function] for Delayed TX Reservation.

7. CONFIRMING THE STATUS OF SCAN

SCAN JOB (optional) displays its status and enables to delete the job. 4 jobs are listed on each screen. The jobs for 250 pages (1,000 jobs) are available to display. Press the [Next] button to display the 5th job or later, and press the [Prev] button to display the previous page.

* For the SCAN function, see the [SCANNING THE IMAGES]. "1.SCAN SETTING IN THE TOUCH PANEL" 📖 Page 152

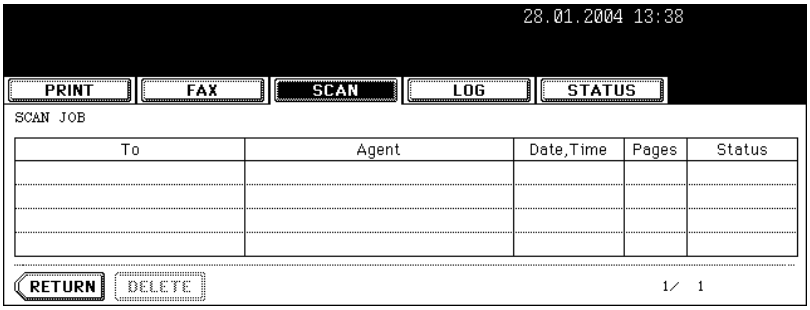

- Items of list

  To: The name of the file created or the e-mail address of the recipient
  Agent: Function used for the scan job
  Date, Time: Date and time of the scan job
  Pages: Number of pages scanned or sent via e-mail
  Status: Status of jobs

- Buttons

  [Delete]: The button becomes active when the deletable job is selected. When this button is pressed, the job is deleted.

8. LOG LIST

LOG allows you to list the jobs that have finished being copied, printed, sent/received Fax, sent/received Internet Fax, sent/received E-mail and scanned to confirm the results. You can also register the Fax number and E-mail address from the send/receive Fax, sent/received Internet Fax and scan (*1) log to the address book. (Fax, Internet Fax, E-mail and scan functions are optional.)

*1 E-mail address used in the E-mail transmission

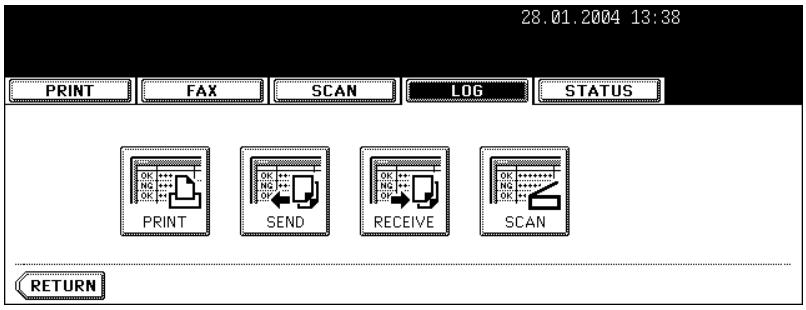

Print Log

When pressing the [PRINT] button on the log menu, the copying or printing status is displayed.

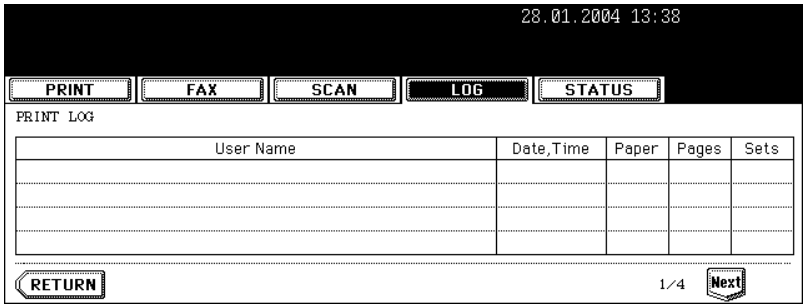

- Items of list
  User Name: Sender's name
  Date, Time: Date and time at the time of copying or printing
  Paper: Paper size
  Pages: Number of pages
  Sets: Number of sets

- Buttons
  [Return]: To return to the log menu, press this button.

Send/Receive Log

When pressing the [SEND] button on the log menu, the sending status of Fax (optional) or Internet Fax (optional) is displayed.

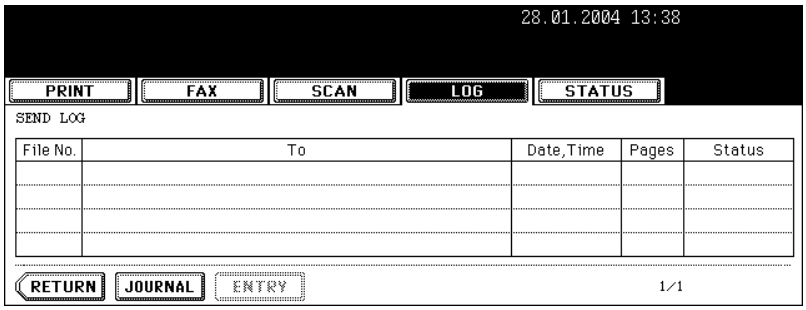

When pressing the [RECEIVE] button on the log menu, the receiving status of Fax (optional), Internet Fax (optional) or E-mail (optional) is displayed.

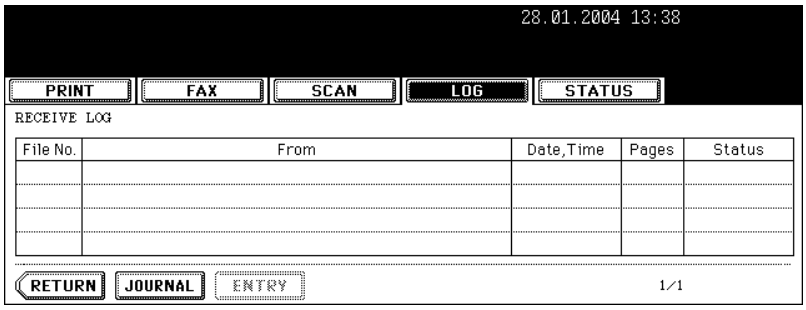

- Items of list

  File No.: Number of accepted job order
  To: Recipient's Fax number or recipient's E-mail address
  From: Sender's Fax number or sender's E-mail address
  Date, Time: Date and time at the time of sending or receiving Fax or Internet Fax, or receiving E-mail
  Pages: Number of pages of sent or received Fax or Internet Fax, or receiving E-mail
  Status: Status of job displayed with 'OK' or 'Error code' "12.ERROR CODE" 📖 Page 210

- Buttons

  [JOURNAL]: To print the sending/receiving status, press this button. See "10.PRINTING SEND/RECEIVE LOG LIST OF FAX" 📖 Page 207 for details.
  [ENTRY]: To register the Fax number or E-mail address in the sending/receiving status to the address book, press this button. See "9.ADDRESS REGISTRATION FROM LOG LISTS" 📖 Page 205 for details.
  [RETURN]: To return to the log menu, press this button.

Scan Log

When pressing the [SCAN] button on the log menu, the scanning status of the following items is displayed.

- Storing status in e-Filing by copying
- Storing status in Share folder (SAVE AS FILE) by copying (optional)
- Storing status in e-Filing or Share folder (SCAN TO FILE) by scanning (optional)
- Sending status of E-mail (SCAN TO E-MAIL) by scanning (optional)

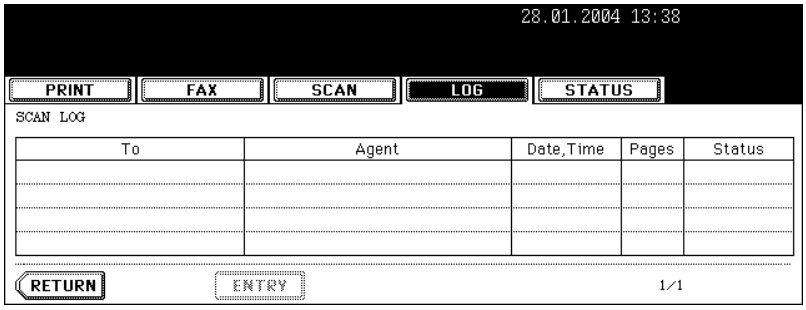

- Items of list

  To: The storing location of the scanned data or E-mail address of the recipient
  Agent: Scanned job in the scan menu
  Date, Time: Date and time at the time of scanning
  Pages: Number of pages scanned or sent E-mail
  Status: Status of job displayed with ‘OK’ or ‘Error code’ "12.ERROR CODE" 🕮 Page 210

- Buttons

  [ENTRY]: To register the E-mail address in the scanning status to the address book, press this button. See "9.ADDRESS REGISTRATION FROM LOG LISTS" 🕮 Page 205 for details.
  [RETURN]: To return to the log menu, press this button.

9. ADDRESS REGISTRATION FROM LOG LISTS

You can register the recipient (or sender) in the address book from the SEND /RECEIVE LOG list or the SCAN LOG list by selecting the recipient (or sender) and pressing the [ENTRY] button.

* For the address book, see the [User Functions Guide].

1 Press the [LOG] button and then press the [SEND] (or [RECEIVE] or [SCAN]) button.

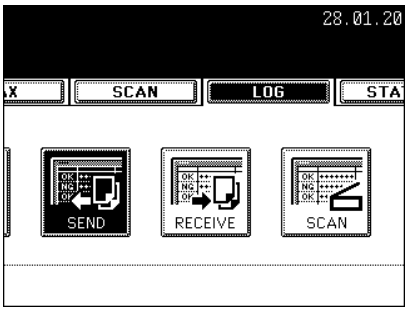

2 SEND LOG list (or RECEIVE LOG list or SCAN LOG list) is displayed.

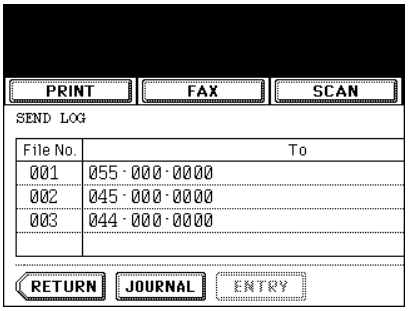

3 Select the recipient (or sender or recipient) you want to register in the address book.

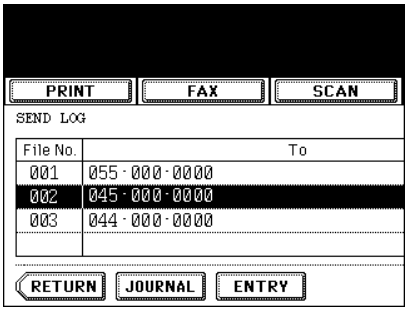

4 Press the [ENTRY] button.

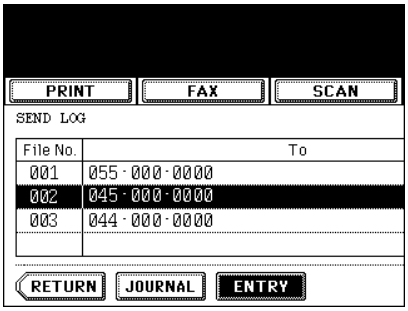

5 ADDRESS ENTRY screen is displayed. Press each button on the touch panel to enter following contact information

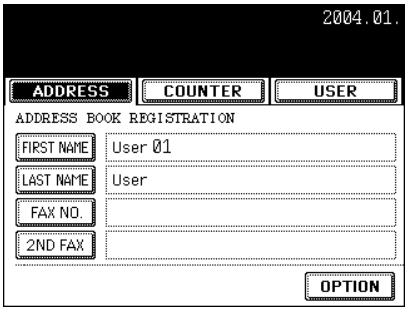

- [FIRST NAME] - Enter the first name of the contact.
- [LAST NAME] - Enter the last name of the contact. This name will appear in the address book list on the touch panel.
- [FAX NO.] - Enter the fax number of the contact.
- [2ND FAX] - Enter the second fax number of the contact.
- [E-MAIL] - Enter the E-mail address of the contact.
- [CORP.] - Enter the company name of the contact.
- [DEPT.] - Enter the department name of the contact.
- [KEYWORD] - Enter the keyword of the contact. This keyword can be used to search for this contact.

Note

You must at least enter either the [FIRST NAME] or [LAST NAME] button, and either the [FAX NO.] or [E-MAIL] button to register the contact.

Tip

When you press each button, the input screen is displayed. Enter the value using the keyboard and digital keys and press the [ENTER] button to set the entry.

- Entering letters "Setting Letters" 📖 Page 30

6 Press the [ENTER] button.

10. PRINTING SEND/RECEIVE LOG LIST OF FAX

Up to 120 logs (3 pages) and 1 selected SEND (or RECEIVE) LOG are available to print in the SEND/RECEIVE LOG list of Fax.

* Either 40 logs (1 page) or 120 logs (3 pages) can be set to print the log list. See the [User Functions Guide] for details.

1 Press the [LOG] button, and then press the [SEND] (or [RECEIVE]) button.

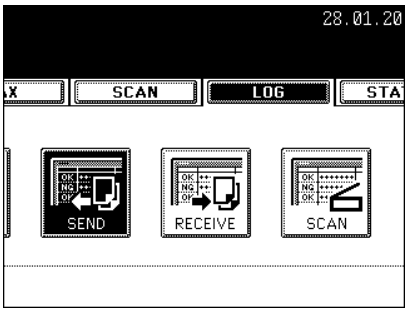

2 Press the [JOURNAL] button to print the SEND/RECEIVE LOG.

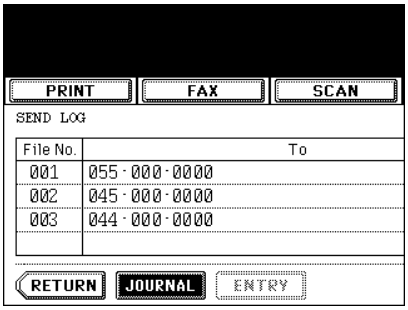

9

STATUS displays the drawer's size of the equipment and highlights the active drawer during printing. When pressing the [STATUS] during stopping of the print job due to an error, the drawer's size and the active drawer can be changed in case of paper shortage and no applicable drawer.

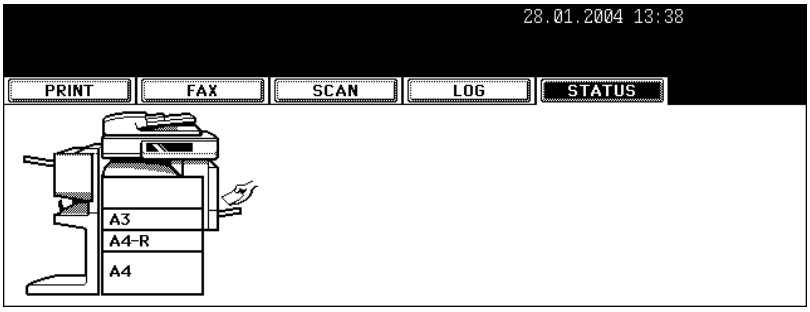

Releasing the Print Error

When the drawer for the specified size paper is not prepared, the print job error occurs and the [JOB STATUS] button blinks. To release the error, follow the procedure below.

1 Press the blinking [JOB STATUS] button.

2 Select the drawer to be changed.

- To select the drawer, press the drawer, or the ▼ or ▲ button on the screen.

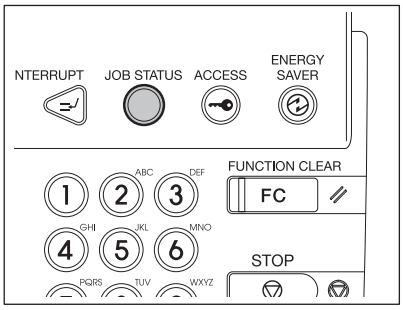

3 Change the paper size of the drawer to the specified size.

- Changing the paper size of the drawer "Changing the Paper Size of the Drawer/Setting the Drawer for Special Uses" 📖 Page 38

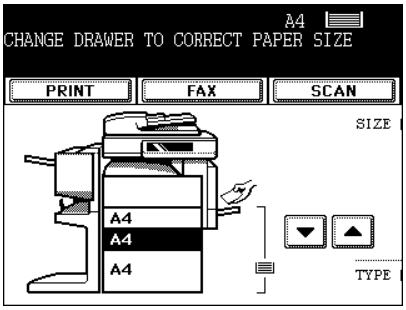

4 **Press the paper size button you set by pressing the paper size button on the screen.**

5 **Press the [START] button.**

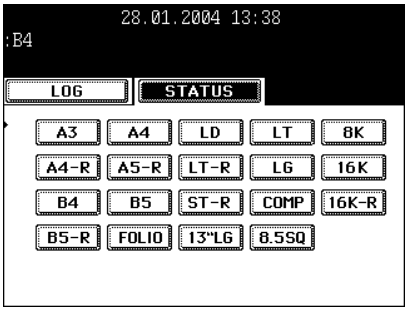

12. ERROR CODE

If an error occurs while using the optional Fax, optional Internet Fax, or optional scan, the error code is displayed in the status of each log. Take an appropriate action with reference to the following.

Fax/Internet Fax

Error Code	Cause & Message	Corrective Action
Fax		
0011	Paper jam	Clear the jammed printing paper.
0012	Original jam	Clear the jammed original.
0013	Door open	Firmly close the open door.
0020	Power interruption	Check the power interruption report.
0030	Reset	(Transmission is cancelled.)
0033	Polling Error	Check polling options setup (Security Code, etc.), and check if the polling document exists.
0042	Memory full	Make sure that there is sufficient memory before making the call again.
0050	Line busy	Retry communications.
0053	Security Mismatch in Relay or Mail Box transmission	Confirm the remote party's Security Code, system password, and your setup.
00B0-00B5 00C0-00C4 00D0-00D2	Signal Error or Line Condition Error	Retry communications. Frequent failures may indicate a phone line problem. If possible, move the unit to another line and try your communications again.
00E8	HDD error	Retry communications. If the error still occurs, contact your service representative.
00F0	Software failure	Retry communications. If the error still occurs, contact your service representative.
00F1	Hardware noise	Retry communications. If the error still occurs, contact your service representative.
Internet Fax		
1C10	System access abnormality	Turn the power OFF and then back ON. Perform the job in error again. If the error still occurs, contact your service representative.
1C11	Insufficient memory	When there are running jobs, perform the job in error again after the completion of the running jobs. If the error still occurs, turn the power OFF and then back ON, and perform the job again.
1C12	Message reception error	Turn the power OFF and then back ON. Perform the job in error again.

Error Code	Cause & Message	Corrective Action
1C13	Message transmission error	Turn the power OFF and then back ON. Perform the job in error again.
1C14	Invalid parameter	When a template is used, form the template again. If the error still occurs, turn the power OFF and then back ON, and perform the job again.
1C15	Exceeding file capacity	Ask your administrator to change the “Fragment Page Size” setting for the Internet Fax setting, or reduce the number of pages and perform the job again.
1C20	System management module access abnormality	Turn the power OFF and then back ON. Perform the job in error again. If the recovery is still not completed, contact your service representative.
1C21-1C22	Job control module access abnormality	Turn the power OFF and then back ON. Perform the job in error again. If the recovery is still not completed, contact your service representative.
1C30	Directory creation failure	Check if the access privilege to the storage directory is writable. Check if the server or local disc has a sufficient space in disc capacity.
1C31	File creation failure	Check if the access privilege to the storage directory is writable. Check if the server or local disc has a sufficient space in disc capacity.
1C32	File deletion failure	Turn the power OFF and then back ON. Perform the job in error again. If the error still occurs, contact your service representative.
1C33	File access failure	Check if the access privilege to the storage directory is writable. Check if the server or local disc has a sufficient space in disc capacity.
1C40	Image conversion abnormality	Turn the power OFF and then back ON. Perform the job in error again. If the error still occurs, contact your service representative.
1C60	HDD full failure during processing	Reduce the number of pages of the job in error and perform the job again. Check if the server or local disc has a sufficient space in disc capacity.

Error Code	Cause & Message	Corrective Action
1C61	Address Book reading failure	Turn the power OFF and then back ON. Perform the job in error again. Reset the data in the Address Book and perform the job again. If the error still occurs, contact your service representative.
1C62	Memory acquiring failure	Turn the power OFF and then back ON. Perform the job in error again. If the error still occurs, contact your service representative.
1C63	Terminal IP address unset	Ask your administrator to set the IP address of the equipment.
1C64	Terminal mail address unset	Ask your administrator to set the E-mail address of the equipment.
1C65	SMTP address unset	Ask your administrator to set the SMTP server address.
1C66	Server time time-out error	Check if the SMTP server is operating properly.
1C67	NIC time time-out error	Turn the power OFF and then back ON. Perform the job in error again. If the error still occurs, contact your service representative.
1C68	NIC access error	Turn the power OFF and then back ON. Perform the job in error again. If the error still occurs, contact your service representative.
1C69	SMTP server connection error	Ask your administrator to set the login name or password of SMTP server and perform the job again. Check if the SMTP server is operating properly.
1C6A	HOST NAME error	Ask your administrator to check if there is an illegal character in the device name. Delete the illegal character and reset the appropriate device name.
1C6B	Terminal mail address error	Ask your administrator to check if there is an illegal character in the E-mail address of the equipment. Delete the illegal character and reset the appropriate E-mail address, then perform the job again.
1C6C	Destination mail address error	Check if there is an illegal character in the Destination E-mail address. Delete the illegal character and reset the appropriate Destination E-mail address, then perform the job again.

Error Code	Cause & Message	Corrective Action
1C6D	System error	Turn the power OFF and then back ON. Perform the job in error again. If the error still occurs, contact your service representative.
1C70	SMTP client OFF	Ask your administrator to enable the SMTP Client and perform the job again.
1C80	Internet Fax transmission failure when processing E-mail job received	Confirm the “Received Internet Fax Forward” settings.
1C81	Onramp Gateway transmission failure	Confirm the mail box settings.
1C82	Internet Fax transmission failure when processing Fax job received	Confirm the “Received Fax Forward” setting.
1CC0	Job canceling	Job was canceled
1CC1	Power failure	Check if the power cable is connected properly and it is inserted securely. Check if the power voltage is unstable.
3A10-3A12	MIME format error	Ask the sender to resend the E-mail in the MIME1.0 format.
3A20-22	E-mail process error	Ask the sender to resend the E-mail.
3A30	Partial E-mail timeout error	Ask the sender to resend the E-mail, or change the Partial Wait time setting.
3A40	Invalid partial E-mail received	Ask the sender to resend the partial E-mail in the RFC2046 format.
3A50-3A52	HDD full error	Ask the sender to resend the E-mail by separating it to several E-mails. If this error occurs because the paper empty occurs and too much waiting jobs are stored in the hard disc, add the paper to activate other jobs.
3A60-3A62	HDD full alert	Ask the sender to resend the E-mail by separating it to several E-mails. If this error occurs because the paper empty occurs and too much waiting jobs are stored in the hard disc, add the paper to activate other jobs.
3A70	Interrupt partial E-mail reception	Ask your administrator to enable the Enable Partial E-mail setting and ask the sender to resend the E-mail.
3A80-3A82	Partial E-mail disabled	Ask your administrator to enable the Enable Partial E-mail setting and ask the sender to resend the E-mail.
3B10-3B12	E-mail format error	Ask your administrator to enable the Enable Partial E-mail setting and ask the sender to resend the E-mail.

Error Code	Cause & Message	Corrective Action
3B20-3B22	Context-Type error	Ask the sender to resend the E-mail with attached files that are the TIFF format.
3B30-3B32	Invalid character set	Ask the sender to resend the E-mail in the ISO-8559-1/2 format.
3B40-3B42	E-mail decode error	Ask the sender to resend the E-mail.
3C10-3C13	TIFF analysis error	Ask the sender to resend the E-mail with attached files that are the TIFF format.
3C20-3C22	TIFF compression error	Ask the sender to resend the E-mail with attached TIFF files in the MH, MR, MMR, or JBIG compression.
3C30-3C32	TIFF resolution error	Ask the sender to resend the E-mail with attached TIFF files whose resolution is either 200 x 100, 200 x 200, 200 x 400, 300 x 300, or 400 x 400 dpi.
3C40-3C42	TIFF paper size error	Ask the sender to resend the E-mail with attached TIFF files that can be printed on the paper available for this equipment.
3C50-3C52	Offramp transmission error	Ask the sender to specify the correct fax numbers and resend the E-mail.
3C60-3C62	Offramp security error	Confirm the fax numbers that are specified in the received offramp gateway job and ask the sender to resend the E-mail with correct fax numbers.
3C70	Power failure	Confirm the job is recovered or not. If not, ask the sender to resend the E-mail.
3D10	Destination address error	Ask your administrator whether the DNS and mail server settings are correctly set. If they are correctly set, ask the sender to confirm the destination address is correct.
3D20	Exceeding maximum offramp destinations	Ask the sender to specify up to 40 destinations for one offramp gateway job. The equipment cannot perform the offramp gateway transmission for more than 40 destinations.
3D30	Fax unit is not installed	Make sure the Fax unit is installed, or connected correctly.
3E10	POP3 server communication error	Ask your administrator that the POP3 server address is correctly set, or the POP3 server works properly.
3E20	POP3 server communication timeout	Ask your administrator that the POP3 server works properly and the LAN cable is connected to the server.

Error Code	Cause & Message	Corrective Action
3E30	POP3 login error	Ask your administrator that the POP3 user name and password is set correctly.
3F00, 3F10, 3F20, 3F30, 3F40	File I/O error	Ask the sender to resend the E-mail. If the error still occurs, contact your service representative.

Scan Job

Error Code	Cause & Message	Corrective Action
SCAN TO E-MAIL		
2C10, 2C12, 2C13, 2C20-2C22	Illegal Job status	A system error has occurred during sending an E-mail. Retry it. If the error still occurs, contact your service representative.
2C11, 2C62	Not enough memory	Make sure there is enough memory to send the scan job.
2C14	Invalid parameter specified	Make sure you specify the settings correctly and try again.
2C15	Message size exceeded limit or maximum size	You are sending too many documents at a time. Send your documents separately.
2C30	Failed to create directory	Make sure that the access privilege to the storage directory is writable and the server or local disc has a sufficient space. Then retry the scan.
2C31, 2C33	Failed to create file	Make sure that the access privilege to the storage directory is writable and the server or local disc has a sufficient space. Then retry the scan.
2C32	Failed to delete file	Turn the power OFF and then back ON. Retry the scan.
2C40	Failed to convert image file format	Turn the power OFF and then back ON. Retry the scan. If the error still occurs, contact your service representative.
2C61	Failed to read AddressBook	Turn the power OFF and then back ON. Retry the job in error. Reset the data in the Address Book and retry it. If the error still occurs, contact your service representative.
2C63, 2C64	Invalid Domain Address	Ask your administrator to set the IP address.
2C65, 2C66, 2C69	Failed to connect to SMTP server	Make sure the SMTP server is correctly working, or the SMTP server address has been set correctly. Then retry the scan.

Error Code	Cause & Message	Corrective Action
2C67, 2C68 2C6A	Failed to send E-Mail message	Turn the power OFF and then back ON. Retry the scan. If the error still occurs, contact your service representative.
2C6B	Invalid address specified in From: field	Make sure that there is an illegal character in the Terminal mail address. Delete the illegal character and reset the appropriate Terminal mail address, then retry it.
2C6C	Invalid address specified in To: field	Make sure that there is an illegal character in the Destination mail address. Delete the illegal character and reset the appropriate Destination mail address, then retry it.
2C6D	NIC system error	Contact your dealer for support.
2C70	SMTP service is not available	Ask your administrator whether the SMTP service is enabled.
2C80	Failed to process received E-mail job	Ask your administrator to confirm whether the Received Internet Fax Forward is set.
2C81	Failed to process received Fax job	Ask your administrator to confirm whether the Received Fax Forward is set.
2CC0	Job canceled	(Job was canceled.)
2CC1	Power failure occurred	Make sure that the power cable is connected properly and it is inserted securely. Resend the job.
Save as file		
2D10, 2D12, 2D13, 2D20-2D22	Illegal Job status	Turn the power OFF and then back ON. Retry sending. If the error still occurs, contact your service representative.
2D11	Not enough memory	Make sure there are enough memory to save the scan job.
2D14, 2D61	Invalid parameter specified	Make sure you specify the settings correctly and try again.
2D15, 2D65	There are too many documents in the folder. Failed in creating new document.	Delete the data in the local shared folder in the equipment and retry the scan.
2D30	Failed to create directory	Make sure that the access privilege to the storage directory is writable and the server or local disc has a sufficient space. Then retry the scan.
2D31, 2D33	Failed to create file	Make sure that the access privilege to the storage directory is writable and the server or local disc has a sufficient space in disc capacity. Then retry the scan.

Error Code	Cause & Message	Corrective Action
2D32	Failed to delete file	Turn the power OFF and then back ON. Retry the scan.
2D40	Failed to convert image file format	Turn the power OFF and then back ON. Retry the scan. If the error still occurs, contact your service representative.
2D60	Failed to copy file	Turn the power OFF and then back ON. Retry the scan. If the error still occurs, contact your service representative.
2D62	Failed to connect to network destination. Check destination path.	Make sure that the network path is correct, and retry the scan. If the error still occurs, ask your administrator to confirm whether the IP address or path of the server is correct. Also make sure that the server is operating properly.
2D63	Specified network path is invalid. Check destination path.	Make sure you specify correct network folder and retry the scan.
2D64	Logon to file server failed. Check username and password.	Make sure you specify correct user name and password to logon the file server and retry the scan.
2D66	Failed to process your job. Insufficient disc space.	Delete the data in the local shared folder in the equipment and retry the scan.
2D67	FTP service is not available.	Ask your administrator whether the FTP service is configured correctly.
2D68	File Sharing service is not available.	Ask your administrator whether the SMB protocol is enabled.
2DC0	Job canceled	Job was canceled.
2DC1	Power failure occurred	Make sure that the power cable is connected properly and it is inserted securely. Resend the job.
Store to e-Filing		
2B10	There was no applicable job.	Retry the scan.
2B11	Job status failed.	Retry the scan. The system could not store the scan job.
2B20	Failed to access file.	Retry the scan. The system could not store the scan job.
2B30	Insufficient disc space.	Delete unnecessary documents in e-Filing and try again.

Error Code	Cause & Message	Corrective Action
2B31	Failed to access Electronic Filing.	Make sure that the specified e-Filing or folder exists. (If not, this error would not occur.). Delete the specified e-Filing or folder and reset them. Retry the job in error. If the specified e-Filing or folder cannot be deleted, contact your service representative.
2B32	Failed to print Electronic Filing document.	Make sure that the specified document exists. (If not, this error would not occur.). Delete the specified document. Retry the job in error. If the specified document cannot be deleted, contact your service representative.
2B50	Failed to process image.	Turn the power OFF and then back ON. Retry the scan. If the error still occurs, contact your service representative.
2B51	Failed to process print image.	Make sure that the Function List can be printed out. Retry the print. If the error still occurs, contact your service representative.
2B60	Duplicate error. Changed folder name automatically.	There is the same named folder in the selected box. The system automatically renames the folder.
2B70	Duplicate error. Changed document name automatically.	There is the same named document in the selected box or folder. The system automatically renames the document.
2B90	Insufficient Memory.	Turn the power OFF and then back ON. Retry the scan. If the error still occurs, contact your service representative.
2BA0	Invalid Box password specified.	Make sure that the password is correct and retry the scan, or reset the password and retry the scan. When this error occurs for the print of the data in the e-Filing, perform the print with the administrator's password. If the recovery is still not completed or in case of invalid password for the operation other than printing (opening the file, etc.), contact your service representative.
2BB0	Job canceled	(Job was canceled by the user.)
2BB1	Power failure occurred	Make sure that the power cable is connected properly and it is inserted securely.
2BC0	System fatal error.	Turn the power OFF and then back ON. Retry the print. If the error still occurs, contact your service representative.

Error Code	Cause & Message	Corrective Action
2BC1	Failed to acquire resource.	Turn the power OFF and then back ON. Retry the print. If the error still occurs, contact your service representative.
2B60	ERRCD_SCAN_BOX_FOLDER_DUPLICATE	Check the folder to be made.
2B70	ERRCD_SCAN_BOX_DOCUMENT_DUPLICATE	Check the data to be stored.
2B71	ERRCD_SCAN_BOX_DOCUMENT_EXPIRE	Check the storage period.
2B80	ERRCD_SCAN_BOX_HDD_NEARFULL	Delete the unnecessary data in HDD.
2BD0	ERRCD_SCAN_BOX_RESTORE_FAILED	Check the power cable.
2BE0	ERRCD_SCAN_BOX_MCNTBL_ERROR	Turn the power OFF and then back ON to print again.
2BF0	ERRCD_SCAN_BOX_MAX_PAGE	Reduce the pages to be inserted, and print them.
2BF1	ERRCD_SCAN_BOX_MAX_DOCUMENT	Backup the document in the Box or the folder to PC, or delete them.
2BF2	ERRCD_SCAN_BOX_MAX_FOLDER	Backup the document in the Box or the folder to PC, or delete them.

Printer

Error Code	Cause & Message	Corrective Action
402F	PM size error	Memory full. Contact your service representative.
4030	No print enabler/invalid	Check if the print enabler is connected properly and it is inserted securely. Or check if the trial period is expired.
4031	HDD full for printing	Too many jogs of Private print and Department code print are stored in HDD. Perform the jobs or delete them.
A221	Print job cancel	Print job is canceled. Retry the print.
A222	Print Job power interruption	Power failure occurred. Retry the print.

RFC related

Error Code	Cause & Message	Corrective Action
2500	Syntax error, command unrecognized: HOST NAME error, Destination mail address error, Terminal mail address error	Check if the Terminal mail address and Destination mail address are correct. Check if the mail server is operating properly. Turn the power OFF and then back ON. Perform the job in error again.
2501	Syntax error in parameters or arguments: HOST NAME error, Destination mail address error, Terminal mail address error	Check if the Terminal mail address and Destination mail address are correct. Check if the mail server is operating properly. Turn the power OFF and then back ON. Perform the job in error again.
2503	Destination mail address error	Check if the mail server is operating properly. Turn the power OFF and then back ON. Perform the job in error again. If the error still occurs, Contact your service representative.
2504	HOST NAME error	Check if the mail server is operating properly. Turn the power OFF and then back ON. Perform the job in error again. If the error still occurs, Contact your service representative.
2550	Destination mail address error	Check the state of the mail box in the mail server.
2551	Destination mail address error	Check if the mail server is operating properly. Turn the power OFF and the back ON. Perform the job in error again. If the error still occurs, Contact your service representative.
2552	Terminal/Destination mail address error	Turn the power OFF and the back ON. Perform the job in error again. If the error still occurs, Contact your service representative.
2553	Destination mail address error	Check if there is an illegal character in the mail box in the mail server.

10. e-FILING

1. e-FILING FUNCTIONS 222
2. SETTING UP BOX 224
3. CHANGING INPUT DATA 226
4. DELETING BOX 228
5. PRINTING STORED DOCUMENT 229

1. e-FILING FUNCTIONS

In this e-Filing functions, the documents obtained by copying, scanning, printing, Fax receiving and Internet Fax reception can be managed in the e-Filing (hard disc) inside the equipment. Before you use the e-Filing, you need to set up it. The e-Filing consists of one public box and user boxes up to 200. You can store a number of documents in each box, and then print the stored documents later as required.

- e-filing can be operated with the equipment or a client PC via network. For the operation via network, see the [e-Filing Guide].

* If the preservation period for documents is specified for a user box in the e-Filing web utility, the stored documents will be deleted after that period has passed. Before that, you need to print the documents, or download them with a client PC using the File Downloader. See the [e-Filing Guide] for details.
* It is recommended to back up the data on the equipment's hard disc to prevent loss of data. You can back it up with the client PC using the File Downloader. See the [e-Filing Guide] for details.

Note

- To store documents into e-filing by scanning or Internet Fax reception, ‘optional Printer kit (GM-1020) and optional Scanner upgrade kit (GM-3020)’, or ‘optional Printer/Scanner kit (GM-2020)’ is required.
- To store documents into e-filing by printing from the client PC via network, ‘optional Printer kit (GM-1020)’ or ‘optional Printer/Scanner kit (GM-2020)’ is required.

The following figure shows the functional diagram of the e-Filing.

1 : Store the document.
2 : Add the printing settings to the stored documents as required.
3 : Print the documents.
4 : The documents can be viewed, edited, merged (Copy/Paste), and printed by the e-Filing web utility via network. Also, the documents can be downloaded by the File Downloader, and imported into TWAIN-compliant applications by the TWAIN driver. See the [e-Filing Guide] for details.

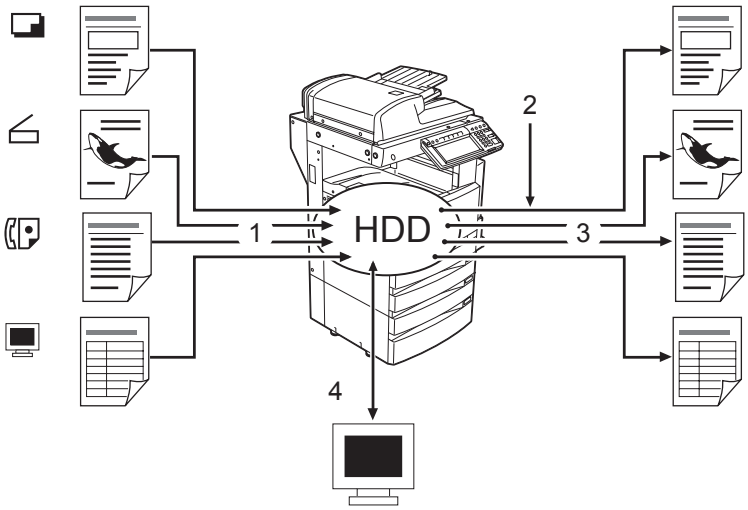

With the equipment, documents can be stored in the e-Filing as the original data by copying or scanning. ("1.STORE TO e-FILING" 🕮 Page 144, "2.SCAN TO e-FILING" 🕮 Page 154) The documents stored in the e-Filing can be printed by specifying some pages or “All Pages” after adding/changing printing settings as required. Also, unnecessary documents can be deleted from the specified user box.

The following table shows the main difference between the operation by the equipment and that by a client PC using the e-Filing web utility via network.

Function	Equipment (Touch Panel)	Client PC
Creating the user box	Yes	Yes
Creating the folder in the user box	No	Yes
Deleting the user box	Yes	Yes
Deleting the folder or document in the user box	No	Yes
Editing the documents (combining, switching, etc.)	No	Yes

The following shows the basic configuration of the e-Filing.

Public box	Shared document 1, Shared document 2, ...	
User box 001	Document 1	
	Document 2	
	Folder 1	Document 1
		Document 2

The public box is a pre-set box by default in the equipment. Use it to store documents that any user may need to work with. Up to 200 user boxes can be registered. It can be registered as a password-protected user box by setting the password. Before storing documents in e-Filing, prepare the user boxes to manage documents efficiently.

- Up to 100 folders per one box can be created (can only be set via the network). See the [e-Filing Guide] for details.
- Up to 400 documents can be stored in a box or a folder. The Maximum page number of a document is 200.

2. SETTING UP BOX

The e-Filing consists of one public box and user boxes up to 200. The public box is a pre-set box since the installation of the equipment, and no setting up is required. The user box can be set/registered by giving a box name. If the password is set, the box is protected and important documents can be stored safely. Up to 200 user boxes can be set/registered.

* Before storing documents in the e-Filing, we recommend you to prepare user boxes and folders (can only be set in the network) to manage documents efficiently. See the [e-Filing Guide] for details.

1 Press the [e-FILING] button on the control panel.

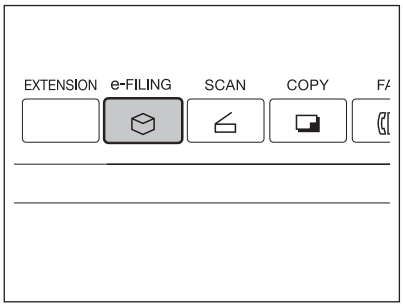

2 Select the blank buttons numbered from 001 to 200, and then press the [SETUP] button.

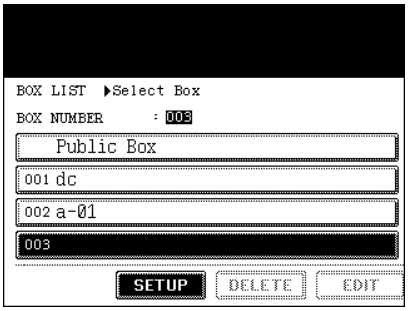

3 Set the “BOX NAME”. Then, set the “Password” as required.

- When pressing the [BOX NAME] button, the letter entry menu ("Setting Letters" 📖 Page 30) is displayed. A box name can contain up to 32 letters.
- Key in the 5-digit identical number in both “Password” and “Retype Password”. Press the [SET] button after entering the password.

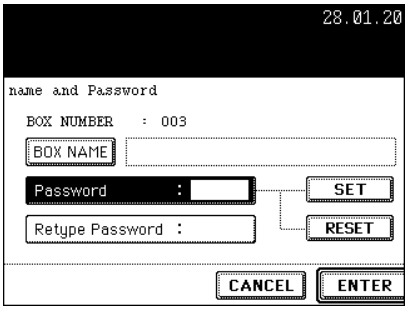

4 Press the [ENTER] button.

- A box is newly set.

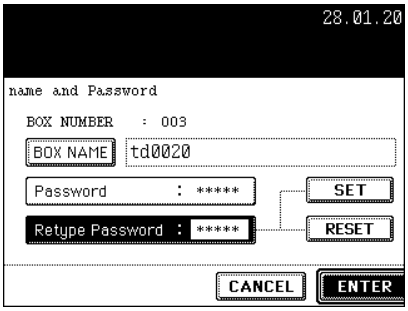

3. CHANGING INPUT DATA

The “registered box name” and “password” of the user box can be changed.

* You cannot change the folder name with the equipment. Change it with a client PC using the e-Filing web utility via network, if required. See the [e-Filing Guide] for details.

1 Press the [e-FILING] button on the control panel.

2 Select the box you want to change, and then press the [EDIT] button.

- Switch to the applicable menu using the [Prev] or the [Next] button.
- To display the applicable menu immediately, key in the number of the desired box you want to change.

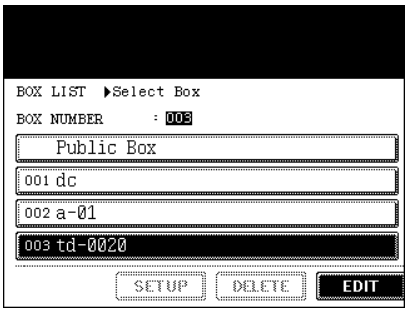

3 Key in the “Password” (5 digits) for the selected box, and then press the [ENTER] button.

- If the password has not been set at the box registration, skip to step 4.

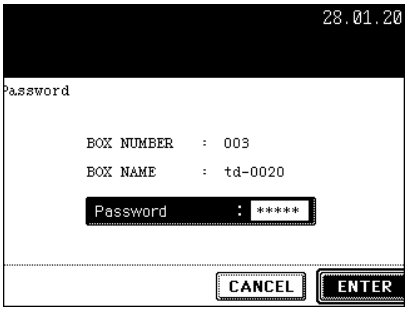

4 Change the data of the “BOX NAME” and the “Password”.

- When pressing the [BOX NAME] button, the letter entry menu ("Setting Letters" 📖 Page 30) is displayed. A box name can contain up to 32 letters.
- Key in the 5-digit identical number in both “Password” and “Retype Password”. Press the [SET] button after entering the password.

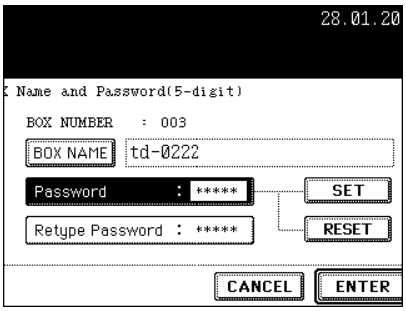

10

5 Press the [ENTER] button.

- The box settings are updated.

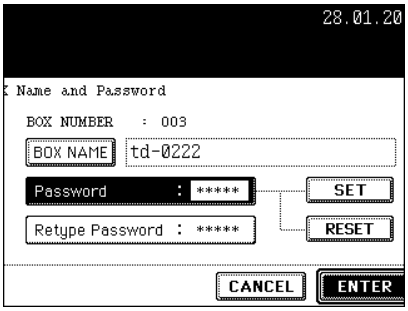

4. DELETING BOX

The unnecessary user box can be deleted. In this case, all the documents in a user box are also deleted.

* The public box cannot be deleted.
* You cannot delete the folder in a user box with the equipment. Delete it with a client PC using the e-Filing web utility via network, if required. See the [e-Filing Guide] for details.

1 Press the [e-FILING] button on the control panel.

2 Select the box you want to delete, and then press the [DELETE] button.

- Switch to the applicable menu using the [Prev] or the [Next] button.
- To display the applicable menu immediately, key in the number of the desired box you want to change.

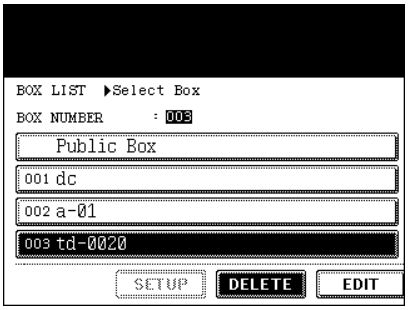

3 Key in the “Password” (5 digits) for the selected box, and then press the [ENTER] button.

- If the password has not been set at the box registration, skip to step 4.

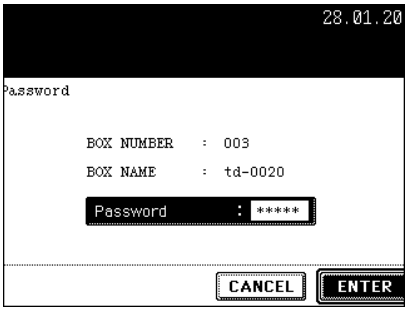

4 “Are you sure you want to delete this BOX?” appears. Press the [YES] button to delete the box.

- The selected box is deleted.

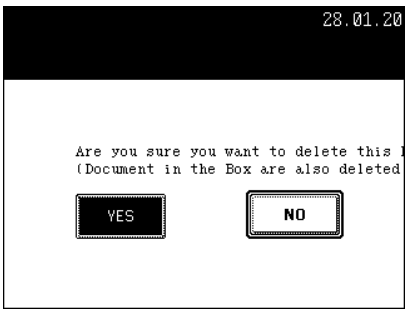

5. PRINTING STORED DOCUMENT

Documents stored in the box or the folder can be printed.
State of finishing can be selected. And to confirm the printing content, test printing can also be performed.

Print the whole Document.

All the pages of the document will be printed. If printing multiple copies is desired, see "Printing the Stored Document with Added/Changed Settings" 📖 Page 231.

1 Press the [e-FILING] button on the control panel.

2 Select the box which has the desired printing document stored, and then press the [ENTER] button.

- Switch to the applicable menu using the [Prev] or the [Next] button.
- To display the applicable menu immediately, key in the number of the desired box you want to change.

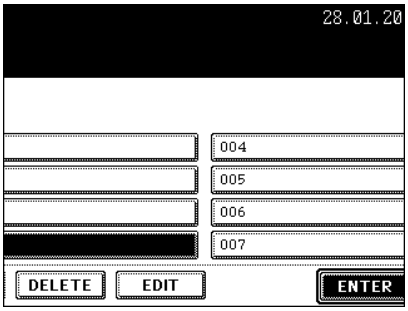

3 Key in the “Password” (5 digits) for the selected box, and then press the [ENTER] button.

- If the password has not been set at the box registration, skip to step 4.

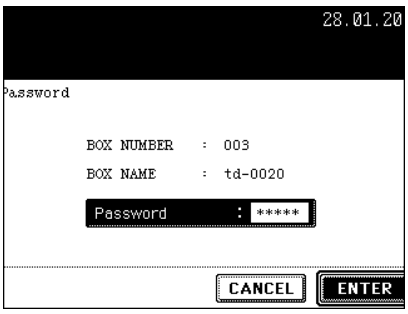

4 Select the document to be printed.

- When you want to select the document in the folder, select the folder and press the [OPEN FOLDER] button. And then select the desired document.

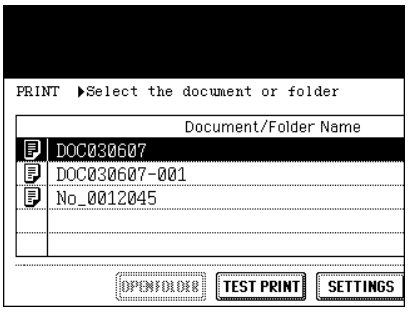

5 Press the [PRINT] button.

- Printing of the whole document starts.

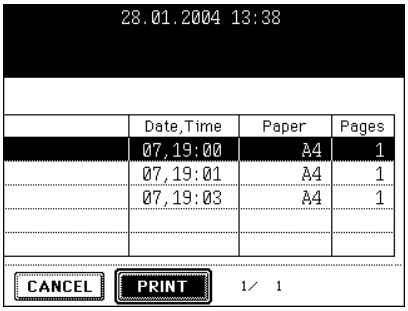

Tip

When you want to stop the print of the stored document during the operation, select the job you want to stop from the PRINT JOB screen or SCAN JOB screen and then press the [DELETE] button. For details, see the JOB STATUS.
"Deleting a Job" 📖 Page 191
"7.CONFIRMING THE STATUS OF SCAN" 📖 Page 201

Execute Test Printing

A part can be printed from a document that consists of several pages.

1 Perform steps 1 to 4 of the “Print the whole Document”.

2 Press the [TEST PRINT] button.

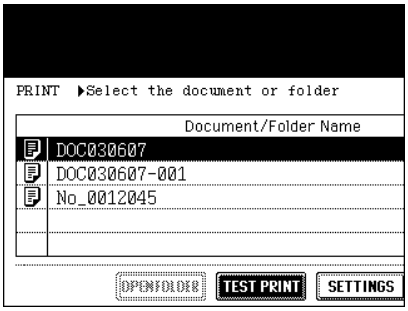

3 Key in the number of the last page to specify the printing page.

- When printing all pages are desired, press the [ALL PAGES] button.

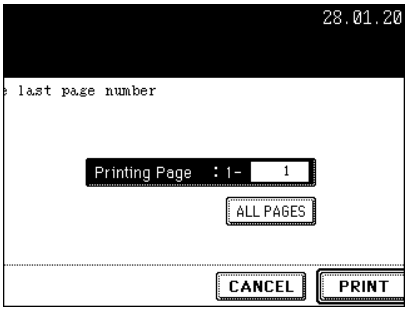

4 Press the [PRINT] button.

- Printing the set page starts.

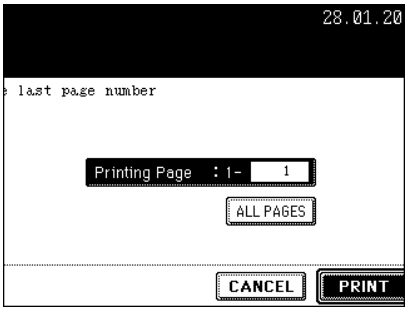

Tip

When you want to stop the print of the stored document during the operation, select the job you want to stop from the PRINT JOB screen or SCAN JOB screen and then press the [DELETE] button. For details, see the JOB STATUS.

"Deleting a Job" 📖 Page 191
"7.CONFIRMING THE STATUS OF SCAN" 📖 Page 201

Printing the Stored Document with Added/Changed Settings

The following settings can be added (or changed) to the stored document in the filing box.

1: Setting the feeding source (Press the cassette area of the feeding source)
2: Setting the number of printing (Key in by the digital key)
3: Setting single-side printing/duplex printing.
4: Setting the finishing mode setting (Selection of the mode is limited depending on the installed option equipment)
5: Setting the paper exit (Can be set when an optional finisher is installed.)
6: Setting the image shift position
7: Setting the added date and time position
8: Setting of page number position

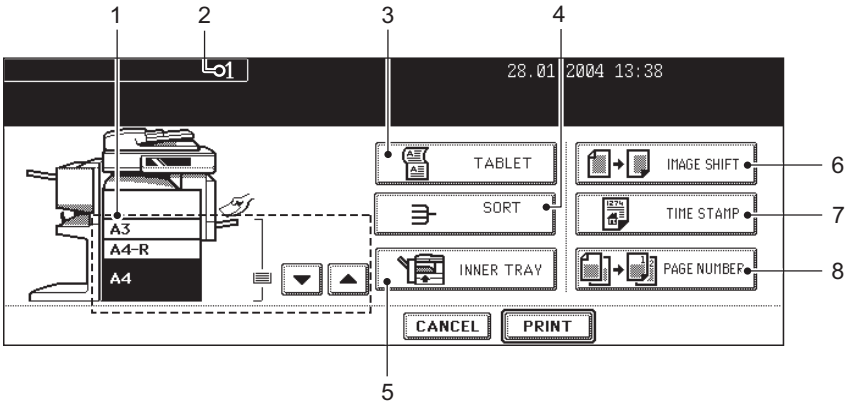

1 Perform steps 1 to 4 of the “Print the whole Document”.

2 Press the [SETTINGS] button.

3 Set printing as required.

- See the previous page for details. As for the settings of 3 to 8, press the button, select the desired button in the menu and press the [ENTER] button.

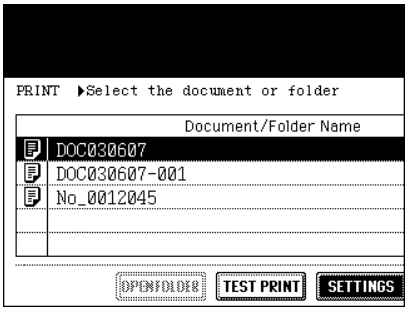

4 Press the [PRINT] button.

- Printing starts.

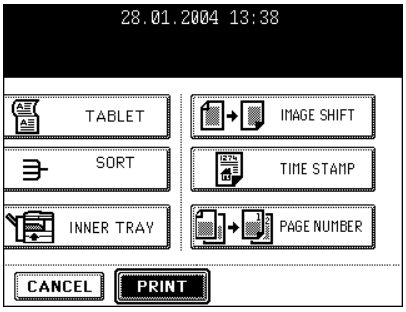

Tip

When you want to stop the print of the stored document during the operation, select the job you want to stop from the PRINT JOB screen or SCAN JOB screen and then press the [DELETE] button. For details, see the JOB STATUS.

"Deleting a Job" 🕮 Page 191
"7.CONFIRMING THE STATUS OF SCAN" 🕮 Page 201

11. TEMPLATE

1. TEMPLATE 234
2. RECALLING TEMPLATE 235
3. REGISTERING TEMPLATE 238
4. CHANGING INPUT DATA 243
5. DELETING TEMPLATE 247

1. TEMPLATE

A combination of functions frequently used can be registered as a template and recalled as required

* You can register the setting combination of copy functions, scan functions or Fax functions as a template and retrieve it.

The combinations are registered in either “PUBLIC TEMPLATE GROUP” or “USER GROUP (Up to 200 groups are available.)” in the menu of template. Up to 60 combinations can be registered in 1 group.

Note

- To use scan functions, ‘optional Printer kit (GM-1020) and optional Scanner upgrade kit (GM-3020)’, or ‘optional Printer/Scanner kit (GM-2020)’
- To use Fax functions, ‘optional Fax board (GD-1150)’ is required.

1 : Register the combination of the functions.
2 : Place the original.
3 : Retrieve the desired template.

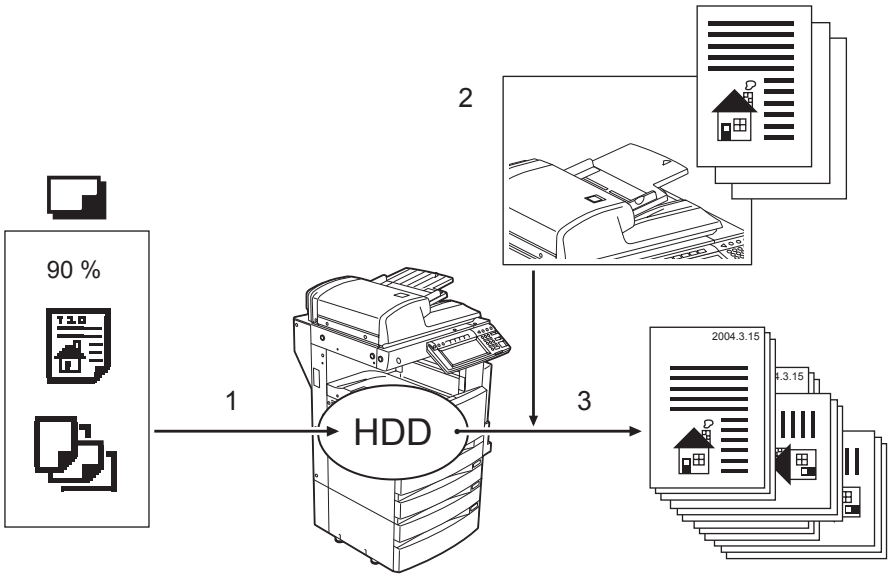

2. RECALLING TEMPLATE

All you have to do is to press the [START] button (the [SCAN] button on the touch panel for scanning) after recalling the required template.

* Before recalling templates, you need to register them. See "3.REGISTERING TEMPLATE" 🕮 Page 238.

When Recalling Template in the Public Group

1 Place paper in the drawer(s).

- "4.SETTING COPY PAPER" 🕮 Page 35

2 Place the original(s).

- "2.SETTING ORIGINALS" 🕮 Page 51

3 Press the [TEMPLATE] button on the control panel.

- Menu for recalling template is displayed.

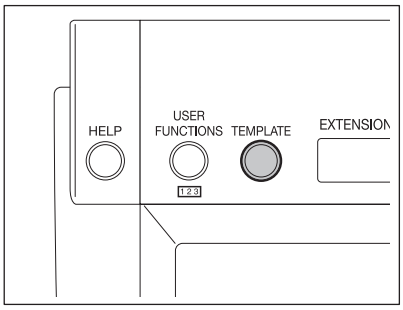

4 Select the [PUBLIC TEMPLATE GROUP] button, and then press the [ENTER] button.

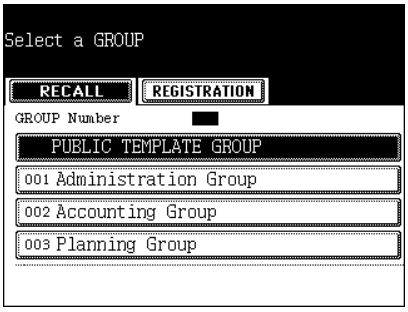

5 Select the desired template.

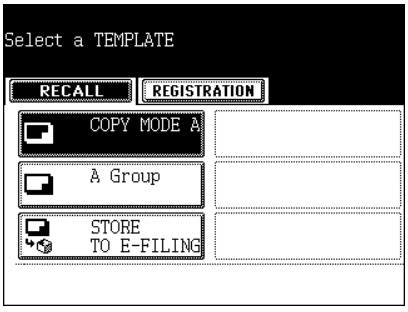

6 **Confirm that “Updated the template setting” is displayed on the screen.**

- Select other copy mode as required.

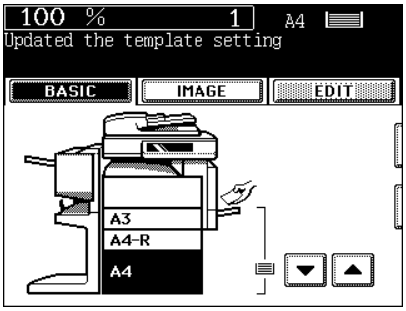

7 **Press the [START] button.**

When Recalling Template in the User Group

1 **Place paper in the drawer(s).**

- "4.SETTING COPY PAPER" 🕮 Page 35

2 **Place the original(s).**

- "2.SETTING ORIGINALS" 🕮 Page 51

3 **Press the [TEMPLATE] button on the control panel.**

- Menu for recalling template is displayed.

4 **Select the group registered the template you want to recall, and then press the [ENTER] button.**

- Switch to the applicable menu using the [Prev] or the [Next] button.
- To display the applicable menu immediately, key in the number of the desired user group.

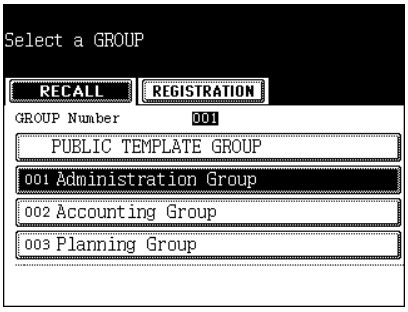

5 **Key in the Password (5 digits) of the selected group, and then press the [ENTER] button.**

- If the password has not been set at the group registration, skip this procedure and go to step 6.

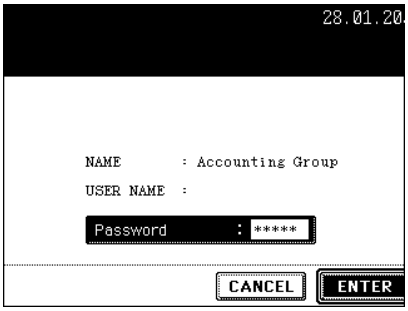

6 Select the desired template.

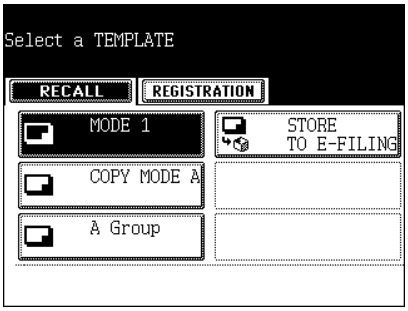

7 Key in the Password (5 digits) of the selected template, and then press the [ENTER] button.

- If the password has not been set at the group registration, skip this procedure and go to step 8.

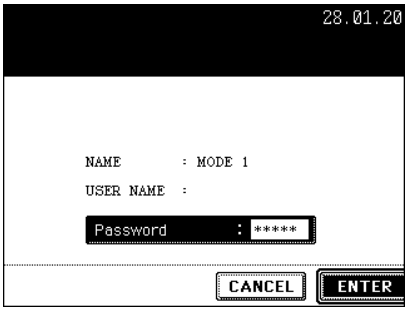

8 Confirm that “Updated the template setting” is displayed on the screen.

- Select other copy mode as required.

9 Press the [START] button.

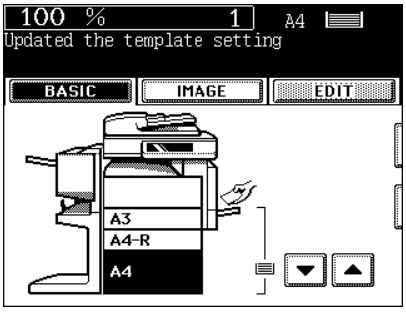

3. REGISTERING TEMPLATE

To recall the template, you need to first register the setting combination as a template.
The template is registered either in “PUBLIC TEMPLATE GROUP” or “USER GROUP” depending on your purpose.

- PUBLIC TEMPLATE GROUP:
  Anyone can use the template when the setting combination of the functions frequently used throughout the company or organization have been registered in this group. Up to 60 combinations (templates) are available in this group. According to the purpose of use, you can restrict the use by entering the password.
- USER GROUP:
  Each department, section or person controls one user group and registers it as a template. It is easier to control it if you set the password for group registration. Up to 200 groups can be set and up to 60 combinations (templates) are available in this group.

* When registering the template in the public template group, keying in the “Admin Password” is required.

Registering the Template in the Public Template Group

1 Set every function you want to combine.

- Ex.: Setting “Image shift”, “90% Reduction” and “10 sets of copies” of the copy function.

2 Press the [TEMPLATE] button on the control panel.

3 Press the [REGISTRATION] button.

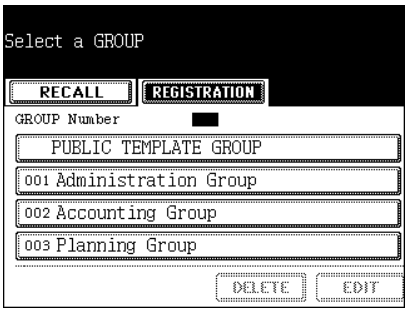

4 Select “PUBLIC TEMPLATE GROUP”, and then press the [ENTER] button.

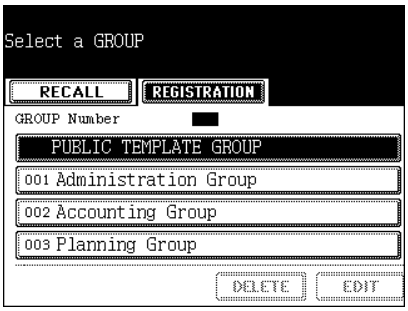

5 Key in the “Admin Password” (6 digits), and then press the [ENTER] button.

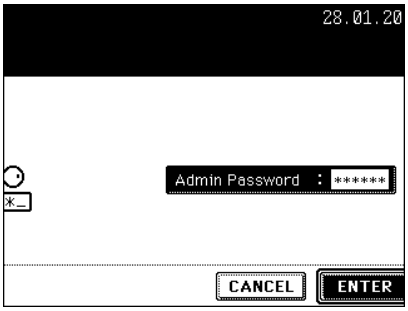

6 Press the blank key in the template menu, and then press the [SAVE] button.

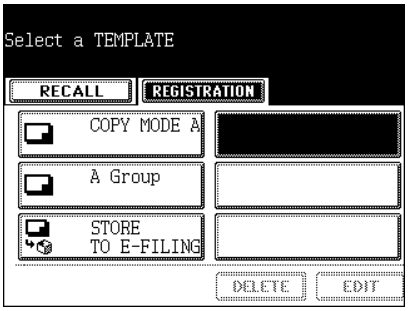

7 Enter the data for registering template.

- Although either the “NAME 1” or the “NAME 2” must be entered, the “USER NAME” and the “PASSWORD” are entered as required.
- When pressing the [NAME 1] button, the menu of entering letters ("Setting Letters" 📖 Page 30) is displayed, so enter the name with up to 11 letters.
- Enter the name with up to 11 letters for “NAME 2” and with up to 30 letters for “USER NAME” as the above manner.

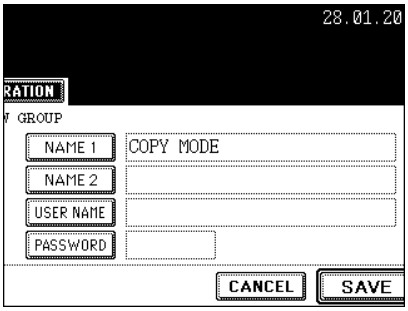

8 When pressing the [PASSWORD] button on the menu of step 7, the menu is switched as shown on the right. Key in a 5-digit identical number in both “Password” and “Retype Password”, and then press the [ENTER] button.

- Press the [ENTER] button after entering the password.

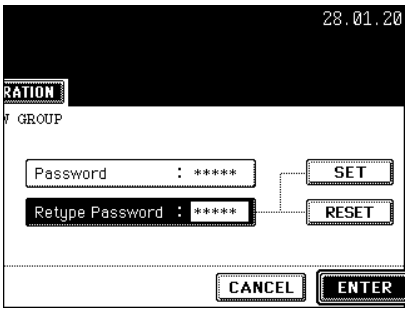

9 Press the [SAVE] button.

- The menu returns to step 1. (the menu before pressing the [TEMPLATE] button on the control panel.)

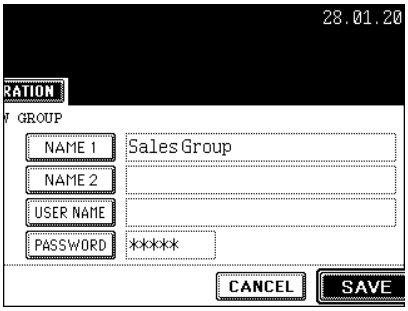

Registering the Template in the User Group

1 Set every function you want to combine.

- Ex.: Setting “Image shift”, “90% Reduction” and “10 sets of copies” of the copy function.

2 Press the [TEMPLATE] button on the control panel.

3 Press the [REGISTRATION] button.

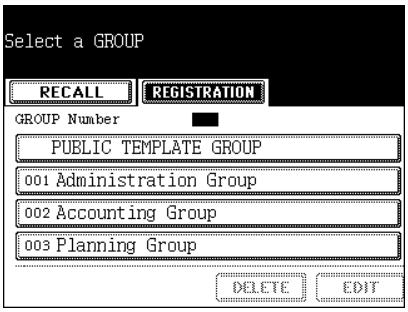

4 Select the “USER GROUP” of blank buttons from 001 to 200, and then press the [ENTER] button.

- When selecting the unregistered “USER GROUP”, follow step 5.

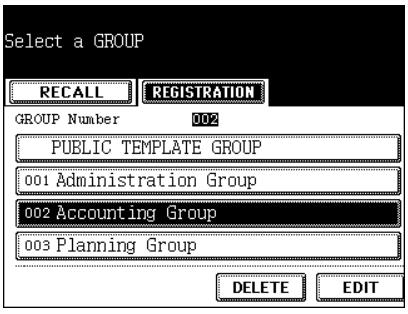

- When selecting the registered “USER GROUP”, key in “GROUP PASSWORD” (5 digits) on the next menu, and then skip to step 8.

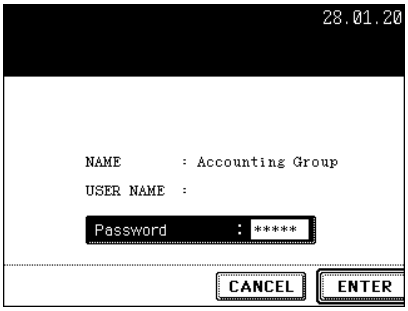

5 Enter the data for registering the new user group.

- Although the “NAME” must be entered, the “USER NAME” and the “PASSWORD” are entered as required.
- When pressing the [NAME] button, the menu of entering letters ("Setting Letters" Page 30) is displayed, so enter the name with up to 20 letters.
- Enter the name with up to 30 letters for the [USER NAME] as the above manner.

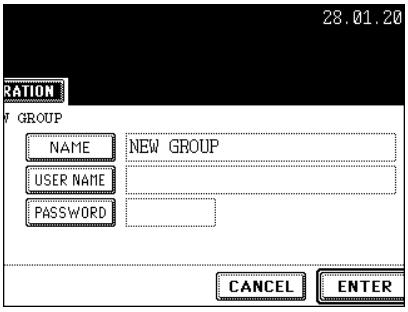

6 When pressing the [PASSWORD] button on the menu of step 5, the menu is switched as shown on the right. Key in a 5-digit identical number in both “Password” and “Retype Password”, and then press the [ENTER] button.

- Press the [SET] button after entering the password.

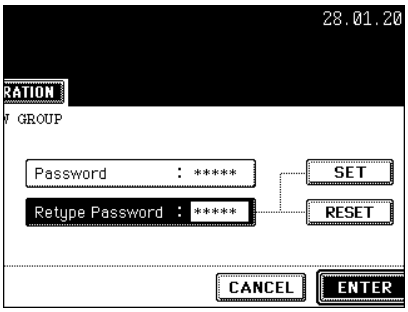

7 Press the empty [TEMPLATE] button, and then press the [SAVE] button.

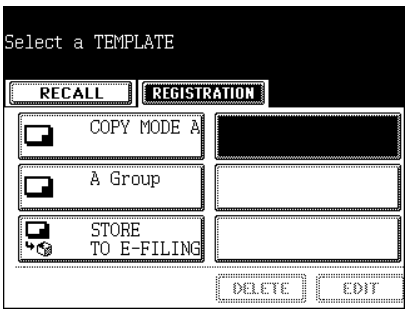

8 Enter the data requested.

- Although either the “NAME 1” or the “NAME 2” must be entered, the “USER NAME” and the “PASSWORD” are entered as required.
- When pressing the [NAME 1] button, the menu of entering letters ("Setting Letters" 📖 Page 30) is displayed, so enter the name with up to 11 letters.
- Enter the name with up to 11 letters for “NAME 2” and with up to 30 letters for “USER NAME” as the above manner.

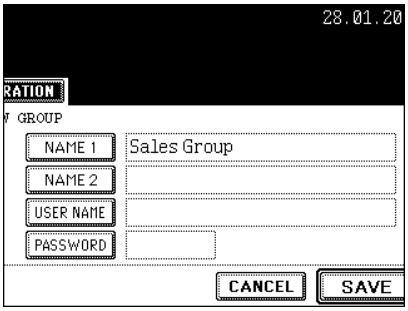

9 When pressing the [PASSWORD] button on the menu of step 9, the menu is switched as shown on the right. Key in a 5-digit identical number in both “Password” and “Retype Password”, and then press the [ENTER] button.

- Press the [ENTER] button after entering the password.

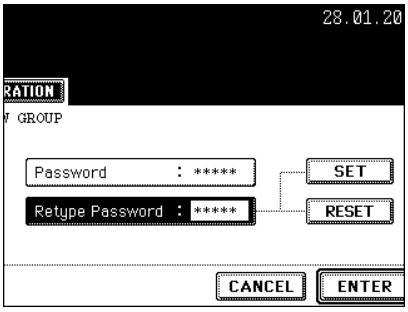

10 Press the [SAVE] button.

- The menu returns to step 1, which is the menu seen before pressing the [TEMPLATE] button on the control panel.

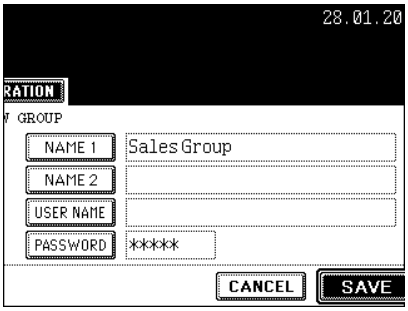

The registered name, user name, password of template/user group can be changed.

Changing the Data of Template

1 Press the [TEMPLATE] button on the control panel.

2 Press the [REGISTRATION] button

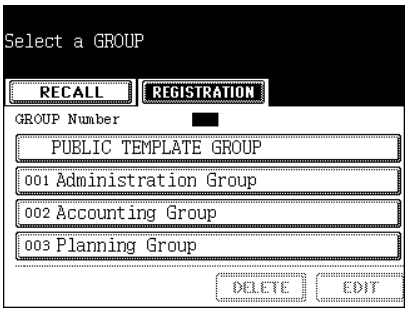

3 Select the group (in which the template was registered) that you want to change, and then press the [ENTER] button.

- Switch to the applicable menu using the [Prev] or the [Next] button.
- To display the applicable menu immediately, key in the number of desired user group.

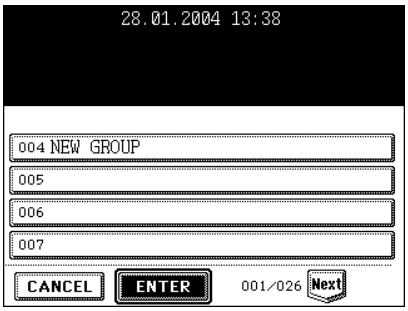

4 When selecting the [PUBLIC TEMPLATE GROUP] button, key in the “Admin Password” (6 digits), and then press the [ENTER] button. When selecting a user group, key in the selected group’s “Password” (5 digits), and then press the [ENTER] button.

- If the password has not been set at the user group registration, skip to step 5.

5 Select the template you want to change, and then press the [EDIT] button.

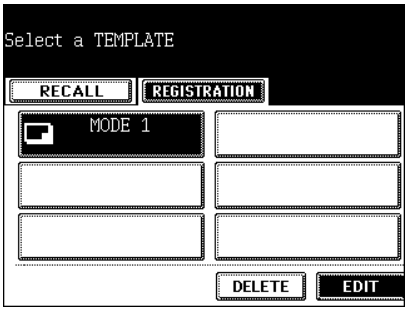

6 Key in the “Password” (5 digits) for the selected template, and then press the [ENTER] button.

- If the password has not been set at the template registration, skip to step 7.

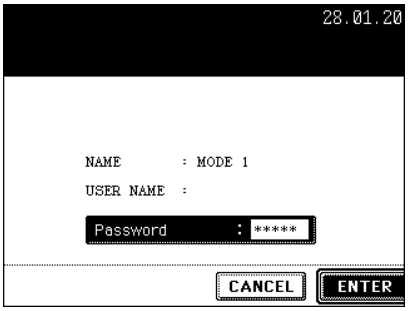

7 Press the button of “NAME 1”, “NAME 2” and/or “USER NAME”.

- When pressing the [NAME 1] button, the menu of entering letters ("Setting Letters" 📖 Page 30) is displayed, so enter the name with up to 11 letters.
- Enter the name with up to 11 letters for the “NAME 2” and with up to 30 letters for the “USER NAME” as the above manner.
- To change the password only, skip step 7.

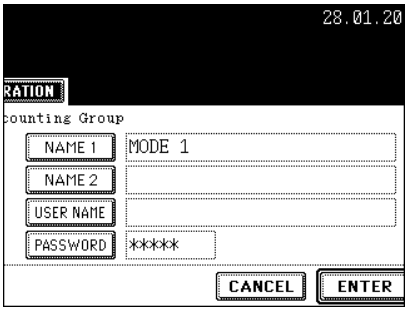

8 When pressing the [PASSWORD] button on the menu of step 7, the menu is switched as shown on the right. Key in the changed number (5-digits identical number) in both “Password” and “Retype Password”, then press the [ENTER] button.

- Press the [ENTER] button after entering the password.
- Not to change the password, skip step 8.

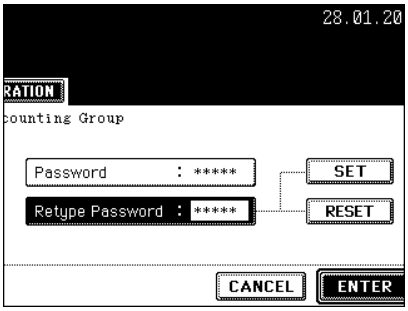

9 Press the [ENTER] button.

- The data of template are changed.

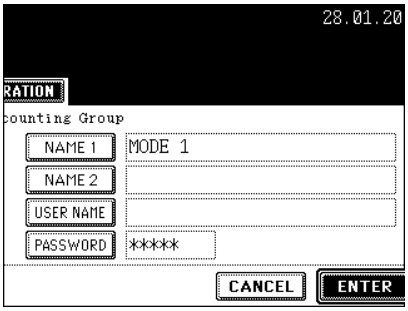

Changing the Data of User Group

Those of public group cannot be changed.

1 Press the [TEMPLATE] button on the control panel.

2 Press the [REGISTRATION] button.

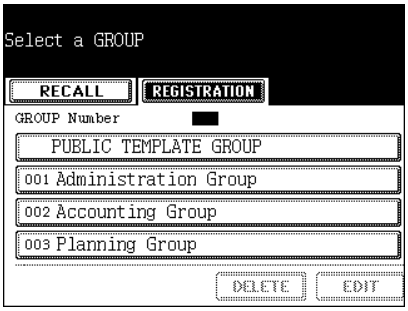

3 Select the “USER GROUP” you want to change, and then press the [EDIT] button.

- Switch to the applicable menu using the [Prev] or the [Next] button.
- To display the applicable menu immediately, key in the number of the desired user group using the digital keys.

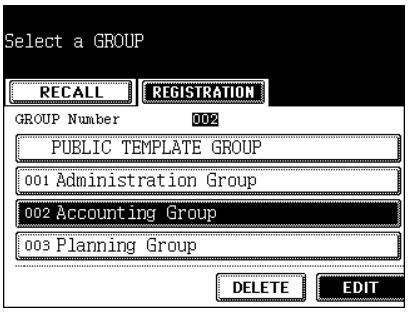

4 Key in the “Password” (5 digits) for selected group, and then press the [ENTER] button.

- If the password has not been set at the group registration, skip to step 5.

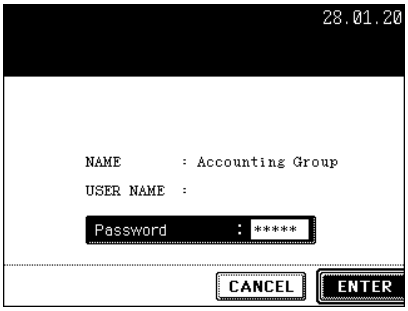

5 Press the [NAME] button and/or the [USER NAME] button.

- When pressing the NAME button, the menu of entering letters ("Setting Letters" 📖 Page 30) is displayed, so enter the name with up to 20 letters.
- Enter the name with up to 30 letters for the “USER NAME” as the above manner.
- To change the password only, skip step 5.

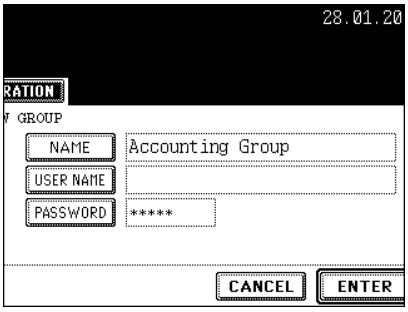

6 When pressing the [PASSWORD] button on the menu of step 5, the menu is switched as shown on the right. Key in the changed number (5-digit identical number) in both “Password” and “Retype Password”, then press the [ENTER] button.

- Not to change the password, skip step 5.

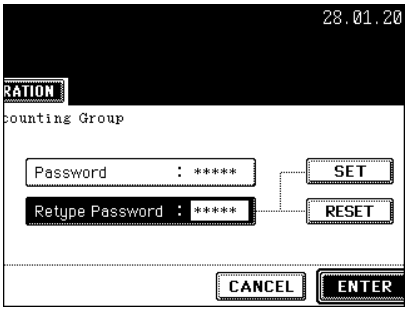

7 Press the [ENTER] button.

- The data of user group are changed.

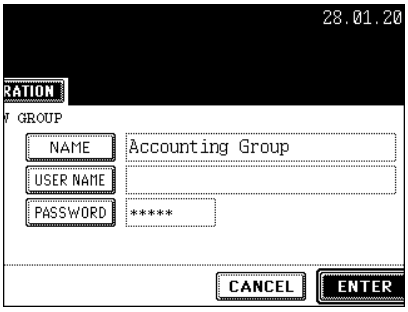

5. DELETING TEMPLATE

Unnecessary templates can be deleted. You can also delete user groups.

Deleting a Template

1 Press the [TEMPLATE] button on the control panel.

2 Press the [REGISTRATION] button.

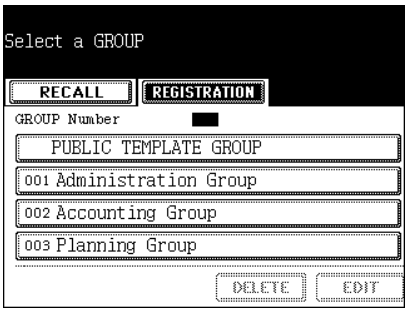

3 Select the group (in which the template was registered) that you want to delete, then press the [ENTER] button.

- Switch to the applicable menu using the [Prev] or the [Next] button.
- To display the applicable menu immediately, key in the number of desired user group.

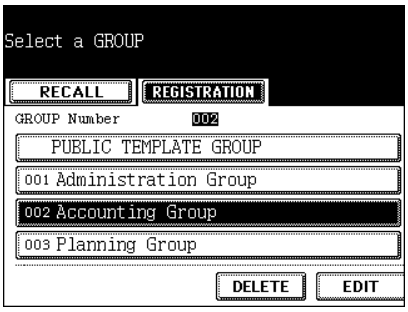

4 When selecting the [PUBLIC TEMPLATE GROUP] button, key in the “Admin Password” (6 digits) using the digital keys, and then press the [ENTER] button. When selecting a user group, key in the selected group “Password” (5 digits) using the digital keys, and then press the [ENTER] button.

- If the password has not been set at the user group registration, skip to step 5.

5 Select the template you want to delete, then press the [DELETE] button.

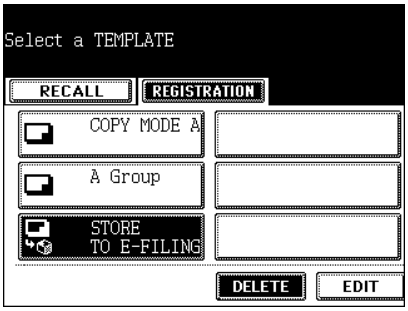

6 Key in the “Password” (5 digits) for the selected template, and then press the [ENTER] button.

- If the password has not been set at the user group registration, skip to step 7.

7 Press the [DELETE] button.

- The selected template is deleted.

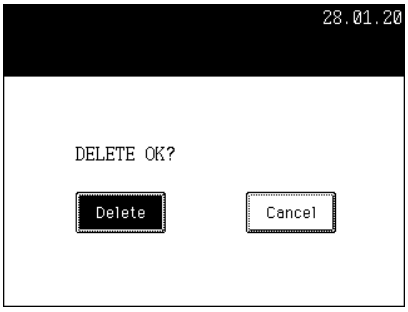

Deleting a User Group

1 Press the [TEMPLATE] button on the control panel.

2 Press the [REGISTRATION] button.

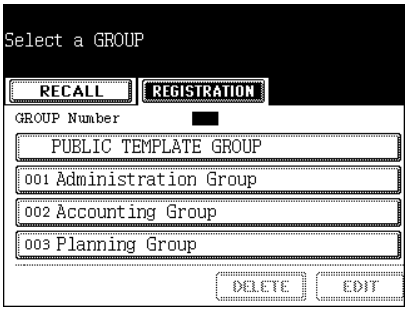

3 Select the user group you want to delete, and then press the [DELETE] button.

- Switch to the applicable menu using the [Prev] or the [Next] button.
- To display the applicable menu immediately, key in the number of desired user group.

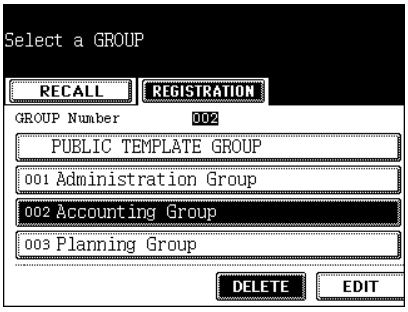

4 Key in the "Password" (5 digits) for the selected group, and then press the [ENTER] button.

- If the password has not been set at the user group registration, skip to step 5.

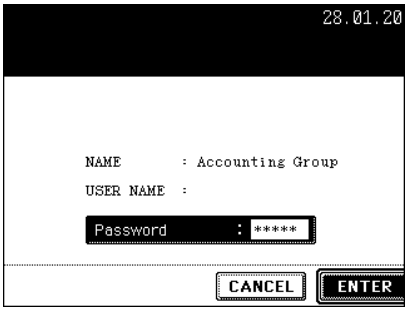

5 Press the [DELETE] button.

- The selected user group is deleted.

12. WHEN THE GRAPHIC SYMBOLS BLINK ON THE TOUCH PANEL

1. DESCRIPTION OF THE BLINKING GRAPHIC SYMBOLS 252
2. REPLACE TONER CARTRIDGE SYMBOL 254
3. CLEAR PAPER SYMBOL 259
4. ADDING STAPLES (OPTIONAL) 274
5. REMOVING JAMMED STAPLES (OPTIONAL) 279
6. DISPOSING OF THE PUNCHED PAPER BITS (OPTIONAL) 283
7. CALL SERVICE SYMBOL/PERIODIC MAINTENANCE MESSAGE 284

1. DESCRIPTION OF THE BLINKING GRAPHIC SYMBOLS

The graphic symbol on the touch panel shows the status of the equipment. When one of the graphic symbols blinks, take the appropriate action referring to the page shown.

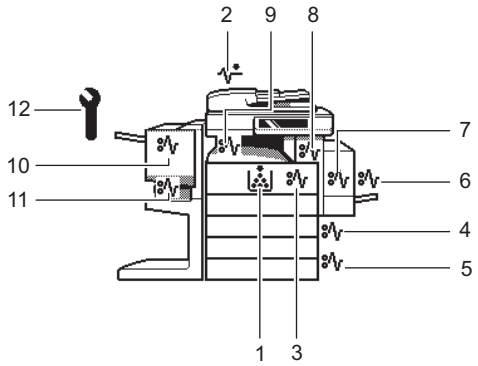

1 **: REPLACE TONER CARTRIDGE symbol**

Blinks when the toner cartridge runs out of toner.
"2.REPLACE TONER CARTRIDGE SYMBOL" 🕮 Page 254

2 **: CHECK ORIGINALS symbol**

Blinks when an original misfeed occurs inside the reversing automatic document feeder.
"1. Paper Misfeed in the Reversing Automatic Document Feeder (optional)" 🕮 Page 259

3 **: JAM RELEASING UNIT MISFEED symbol**

Blinks when a misfeed occurs in the jam releasing unit.
"2. Jam Releasing Unit Misfeed" 🕮 Page 262

4 **: DRAWER MISFEED symbol**

Blinks when paper fed from one of the drawers is misfed.
"3. Drawer Misfeed" 🕮 Page 263

5 **: OPTIONAL FEEDER MISFEED symbol**

Blinks when paper fed from the large capacity feeder/Paper Feed Pedestal (1 drawer type) (optional) is misfed.
"4. Paper Misfeed in the Large Capacity Feeder/Additional drawer module (optional)" 🕮 Page 264

6 **: BYPASS MISFEED symbol**

Blinks when a sheet of paper fails to be fed into the equipment during bypass copying.
"5. Paper Misfeed on the Bypass Feed Unit" 🕮 Page 265

7 **: DUPLEXER MISFEED symbol**

Blinks when a paper misfeed occurs inside the automatic duplexer.
"6. Paper Misfeed in the Automatic Duplexer" 🕮 Page 265

8 **: FUSER MISFEED symbol**

Blinks when a paper misfeed occurs in the fuser unit.
"7. Paper Misfeed in the Fuser Unit" 🕮 Page 266

9 **: RELAY UNIT MISFEED symbol**

Blinks when a paper misfeed occurs in the relay unit.

"9. Paper Misfeed in the Relay Unit (optional)" 🕮 Page 268

10**: FINISHER/HOLE PUNCH UNIT MISFEED symbol**

Blinks when a paper misfeed occurs inside the finisher (optional) or hole punch unit (optional).

"11. Paper Misfeed in the Hole Punch Unit" 🕮 Page 270

11**: SADDLE STITCHING UNIT MISFEED symbol**

Blinks when a paper misfeed occurs inside the saddle stitch unit of the finisher (optional).

"13. Paper Misfeed in the Saddle-stitch Finisher (optional: MJ-1025)" 🕮 Page 272

12**: CALL SERVICE symbol**

Blinks when inspection and maintenance by a service technician are necessary.

"Call Service Symbol" 🕮 Page 284

2. REPLACE TONER CARTRIDGE SYMBOL

When the toner in the cartridge runs out, the REPLACE TONER CARTRIDGE symbol blinks and “Install new toner cartridge” appears.

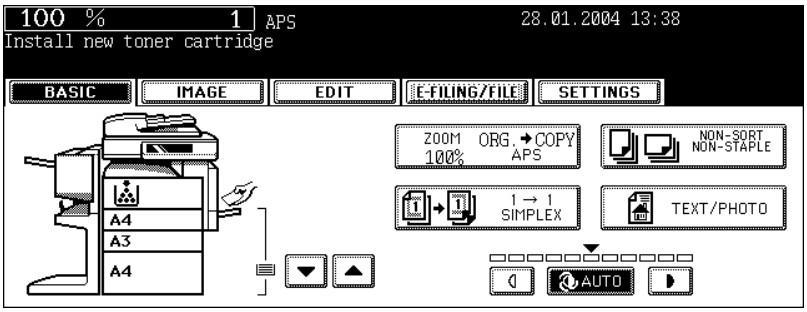

Replacing the Toner Cartridge

1 Open the front cover.

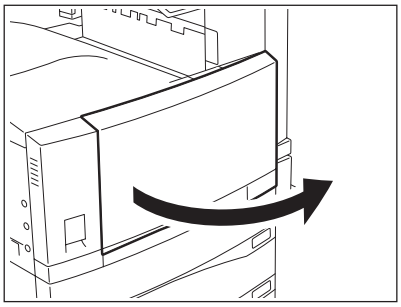

2 Press the green lever down.

- It makes the toner cartridge move to the front.

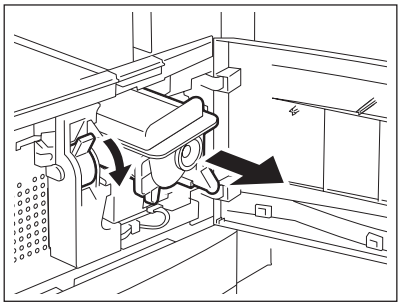

3 **Pull out the toner cartridge.**

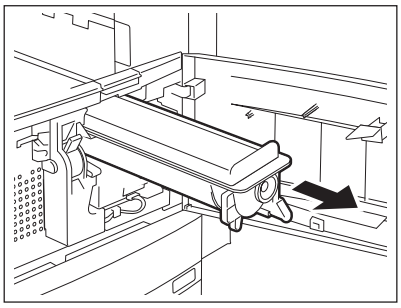

4 **Shake the new toner cartridge well to loosen the toner inside.**

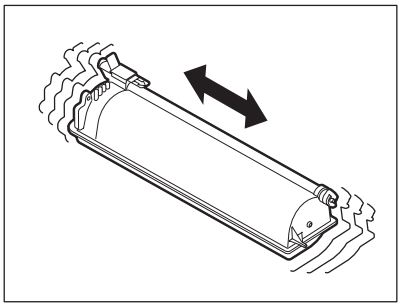

5 **Pull out the seal in the direction of the arrow.**

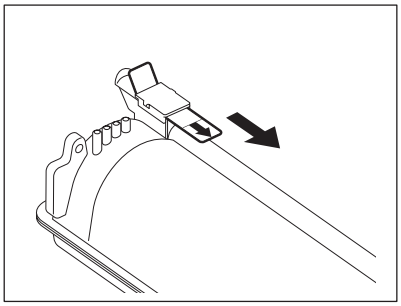

6 **Insert the toner cartridge until it clicks.**

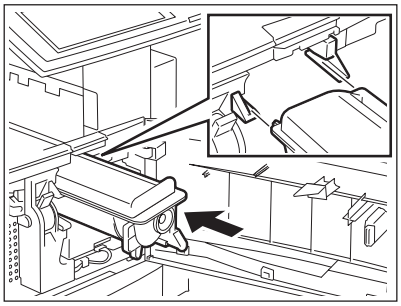

7 Lower the bypass tray.

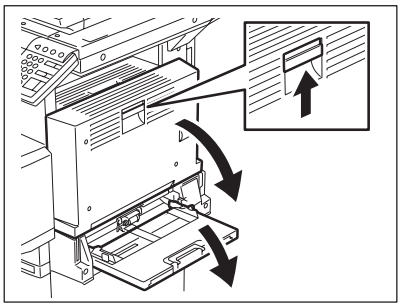

8 Open the automatic duplexer.

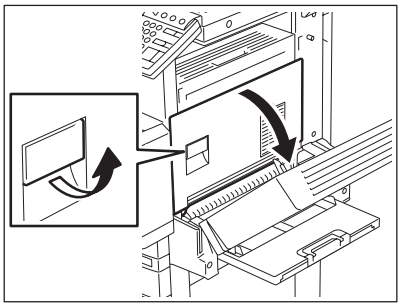

9 Open the transfer cover to take out the transfer charger cleaner from the front pocket.

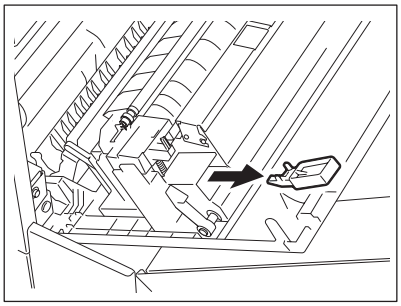

10 Wipe the transfer charger wire properly with the transfer charger cleaner.

- Insert the transfer charger cleaner into the edge of the transfer separation unit. Then take it out again after cleaning.
- Press the cleaner against the wall of the next charger and check if the cleaner pad contacts the wire.

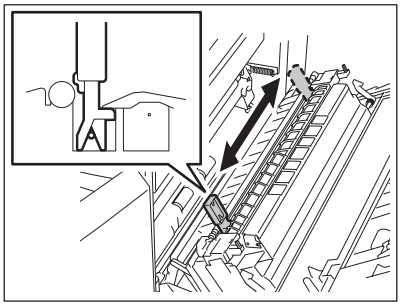

11 **Return the transfer charger cleaner to the front pocket, and then close the transfer cover.**

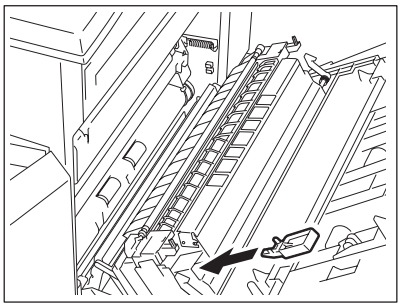

12 **Return the automatic duplexer and the bypass tray to their original position.**

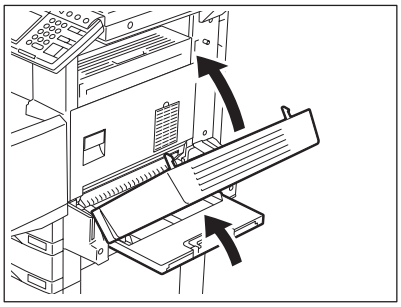

13 **Close the front cover.**

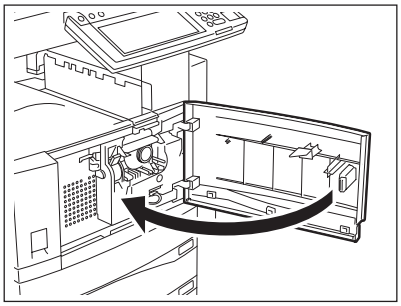

Additional Explanation

The life of the toner cartridge (number of copies) varies depending on the following conditions.

1 Coverage of originals (printing ration of copies)
2 Size and density of originals
3 The existence of solid black when making copies (when a book is copied and the original cover is partially open.)
4 Temperature and humidity in the room when making copies.
5 Copy density and image quality mode
As indicated in the figure below, the life of the toner cartridge varies depending on the copy mode and the coverage of the originals.

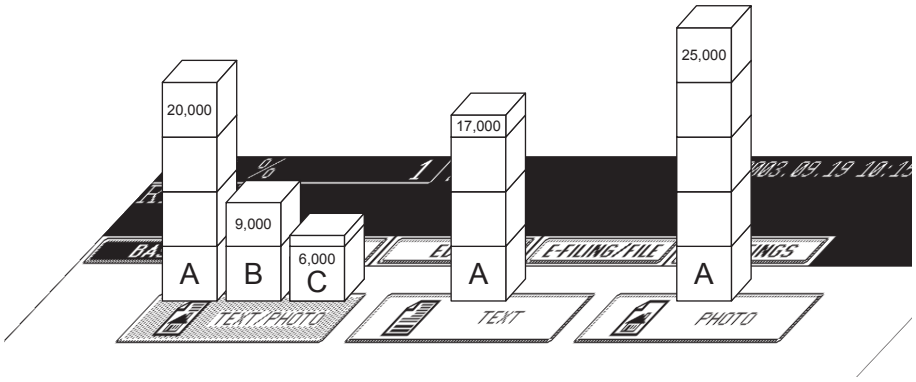

Type of originals

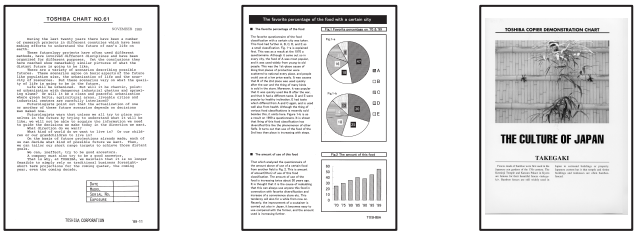

A B C

3. CLEAR PAPER SYMBOL

When a paper misfeed occurs in the equipment, the [8/V] or [/V±] symbol on the touch panel blinks in the positions where the paper is misfed. In that case, remove the misfed paper using the following procedure referring to the illustration below.

* See "1.DESCRIPTION OF THE BLINKING GRAPHIC SYMBOLS" 📖 Page 252 for the details.

1. Paper Misfeed in the Reversing Automatic Document Feeder (optional)

1 Push the button on the reversing automatic document feeder to open the upper cover.

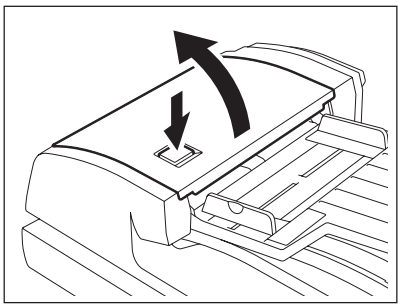

- Remove any misfed originals.

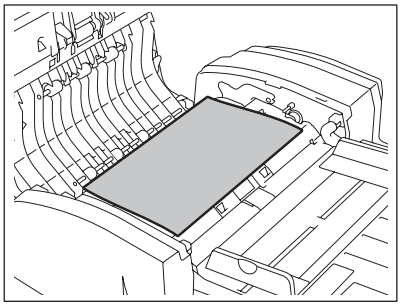

2 Rotate the green knob to remove any misfed originals.

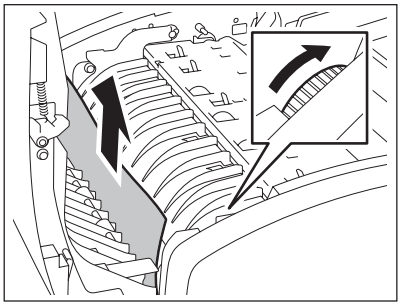

3 **If the misfed original still remains, rotate the green knob to the opposite direction against the step 2. Then remove it.**

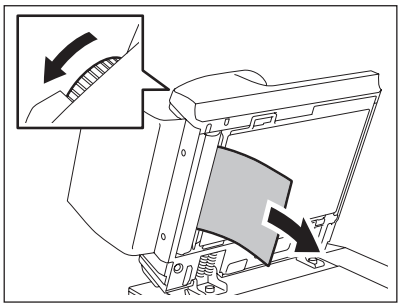

4 **Lift the green handle.**

- Remove any misfed originals.

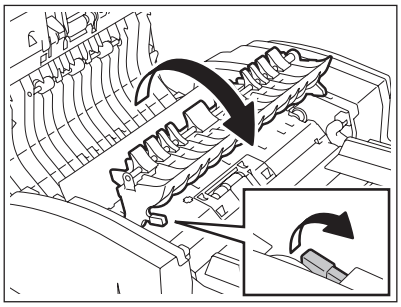

5 **Rotate the green knob on your side in the direction of the arrow and remove any misfed originals.**

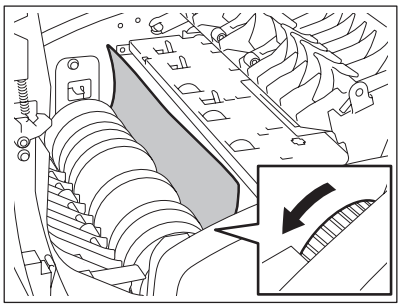

6 **Lift the original feeding tray and remove any misfed originals.**

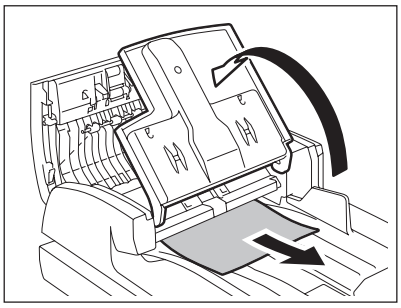

7 **Lower the original feeding tray, move the green knob toward the front and open the cover.**

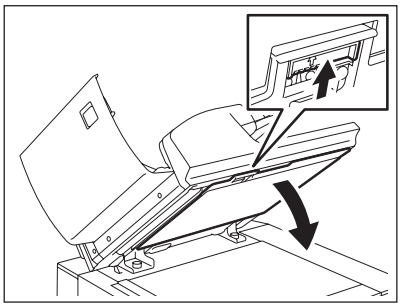

8 **Remove any misfed paper.**

9 **Close the upper and lower cover.**

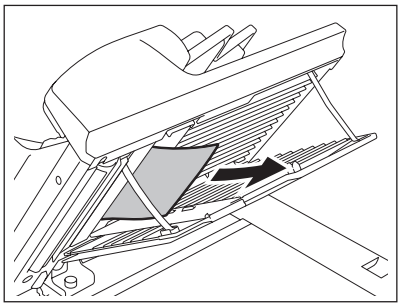

2. Jam Releasing Unit Misfeed

1 **Open the bypass tray.**

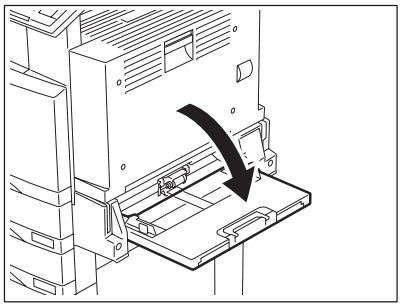

2 **Open the automatic duplexer.**

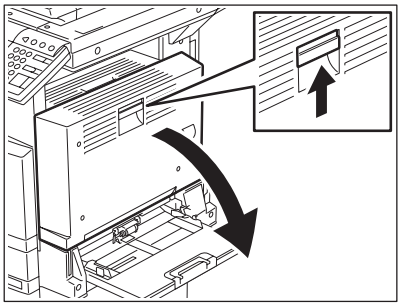

3 **Open the transfer cover.**

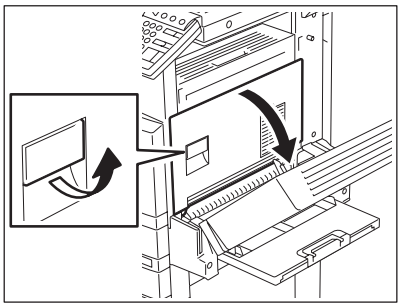

4 **Rotate the green knob as indicated by the arrow toward the inside and remove any misfed paper.**

5 **Return the transfer cover, the automatic duplexer and the bypass tray to the original positions.**

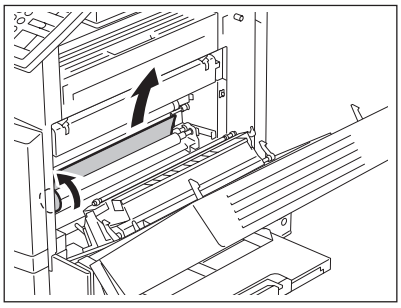

3. Drawer Misfeed

1 **Open the cover.**

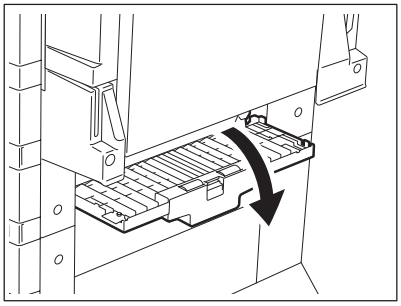

2 **Remove any misfed paper.**

3 **Close the cover.**

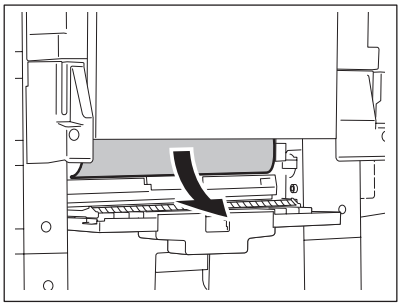

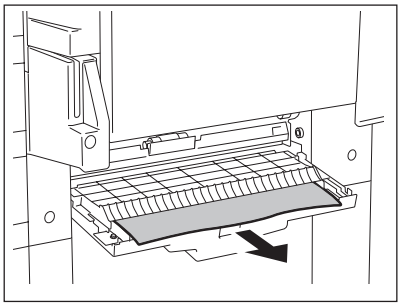

4. Paper Misfeed in the Large Capacity Feeder/Additional drawer module (optional)

1 **Open the cover.**

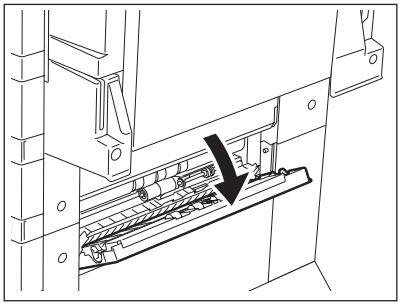

2 **Remove any misfed paper.**

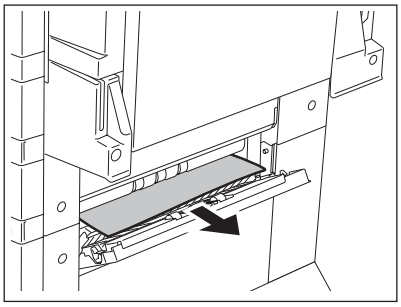

Tip

Paper Misfeed in the Paper Feed Pedestal (optional)

-Open the cover as shown on the right, and remove any misfed paper.

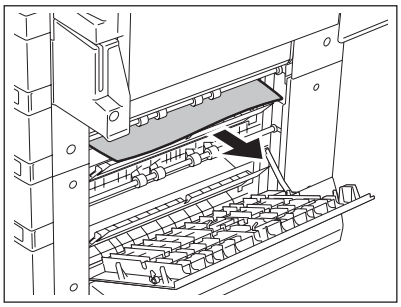

3 **Close the cover.**

5. Paper Misfeed on the Bypass Feed Unit

1 Pull out misfed paper on the bypass tray.

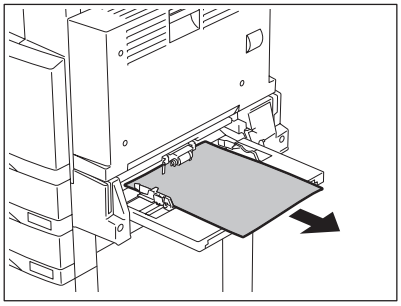

6. Paper Misfeed in the Automatic Duplexer

1 Make sure that the bypass tray is opened, and then open the automatic duplexer.

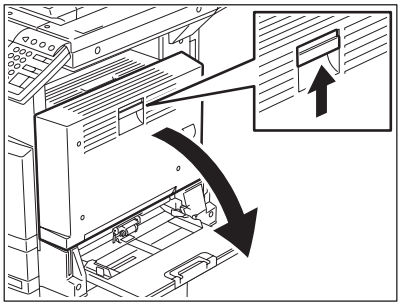

Caution

- Be careful not to let your fingers be caught between the equipment and the automatic duplexer.
  This could injure you.
- Do not touch the metal portion of a guide board as it could burn you.

2 Lift the paper guide as indicated by the arrow and remove any misfed paper.

3 Lower the paper guide and return the automatic duplexer to the original position.

- Be sure to close both sides of the Automatic Duplexer firmly.

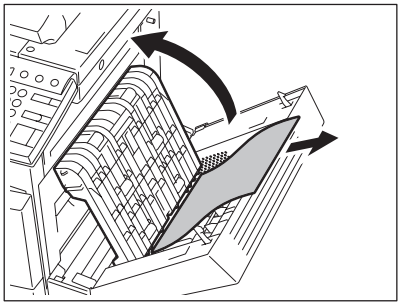

7. Paper Misfeed in the Fuser Unit

1 Make sure that the bypass tray and the automatic duplexer are opened, and then open the transfer cover.

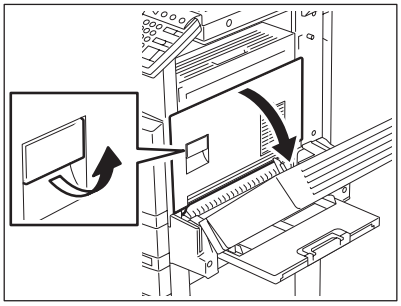

2 Open the exit cover.

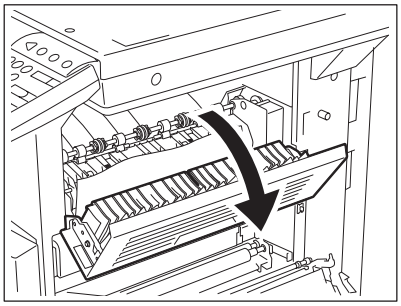

- Press it down completely.

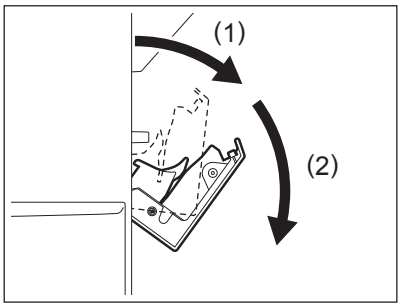

3 Remove any misfed paper.

4 Close the exit cover, the transfer cover and the automatic duplexer. Return the bypass tray to the original position.

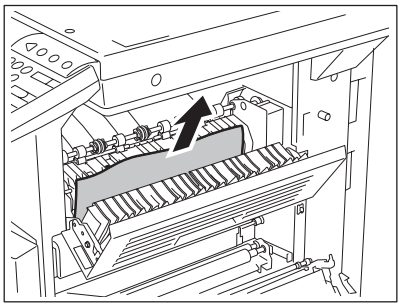

8. Paper Misfeed in the Offset Tray Unit or Job Separator Unit (Optional)

1 **Make sure that the bypass tray and the automatic duplexer are open, then open the transfer cover.**

Caution

DO NOT touch the fuser unit and the metal area around it. Since they are very hot, you could be burned or the shock could cause an injury to your hand in the equipment.

2 **Open the fuser unit cover.**

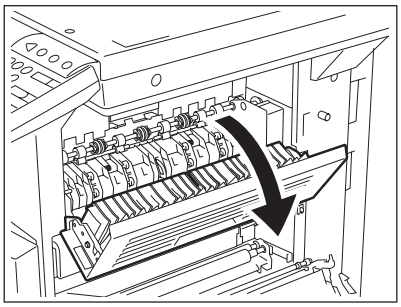

3 **Open the offset tray cover or job separator cover.**

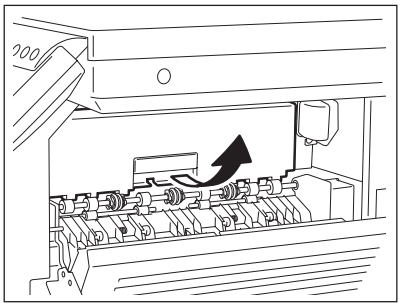

4 Remove any misfed paper inside the offset tray unit or job separator unit.

- According to the position of the misfed paper, pull it out upward or downward.
- upward

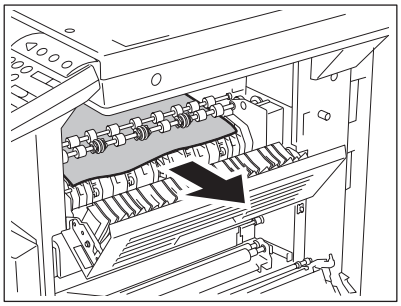

- downward

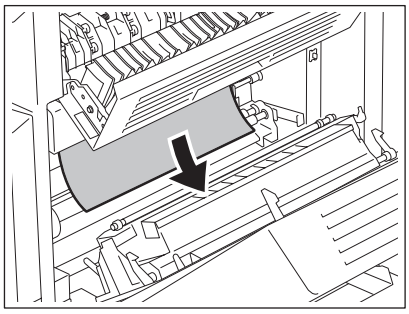

5 Close the offset tray cover or job separator cover. Close the fuser unit cover and the transfer cover. Return the automatic duplexer and bypass tray to the original positions.

9. Paper Misfeed in the Relay Unit (optional)

1 Holding the cover handle of the relay unit, open the cover.

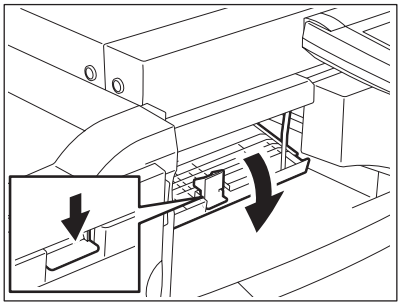

2 **Remove any misfed paper that is inside the relay unit.**

- Remove the misfed paper from the fuser unit side if it is easier.

3 **Close the relay unit cover.**

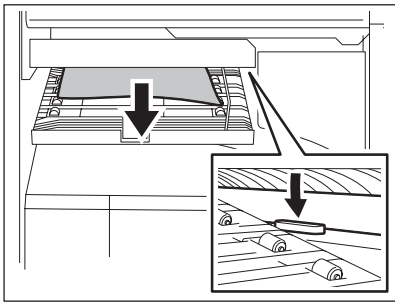

10. Paper Misfeed in the Finisher (optional: MJ-1025)

1 **Remove any misfed paper in the paper exit area.**

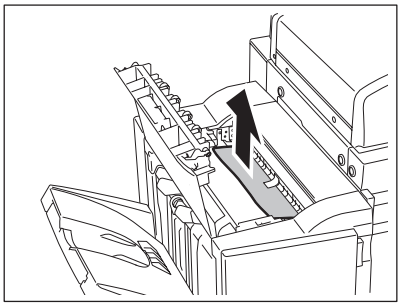

2 **Open the upper cover of the finisher.**

3 **Remove any misfed paper in the finisher.**

4 **Close the upper cover.**

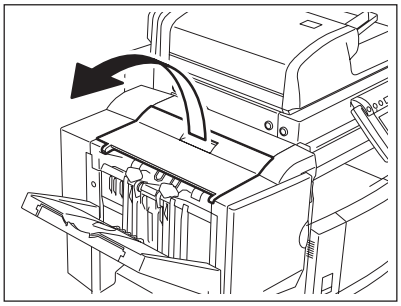

11. Paper Misfeed in the Hole Punch Unit

1 Pressing the release lever of the finisher, move the finisher carefully away from the copier.

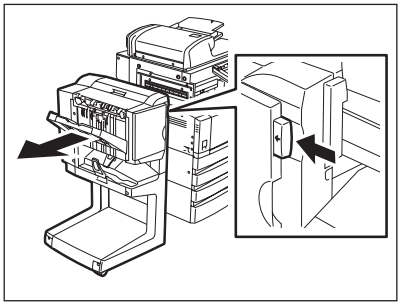

2 Rotate the green knob of the hole punch unit to locate the arrow within the shadow area in the right side of the knob.

- Under this condition, the punches are up.

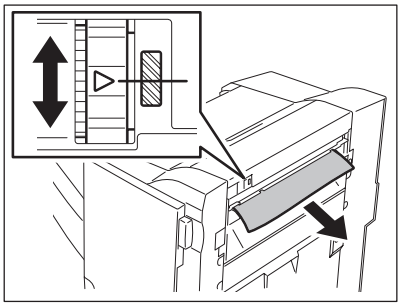

3 Remove any misfed paper.

4 Return the finisher to the original position.

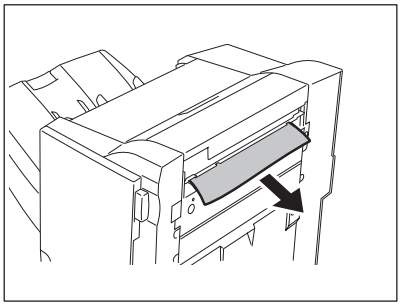

12. Paper Misfeed in the Single-staple Finisher (optional: MJ-1022)

1 **Pull the lever and move the finisher carefully away from the copier.**

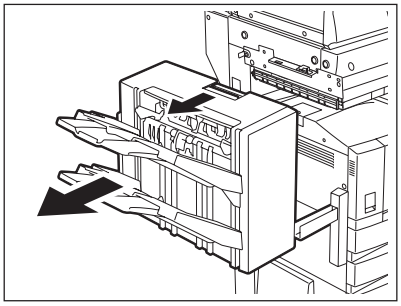

2 **Lift the green lever and remove any misfed paper.**

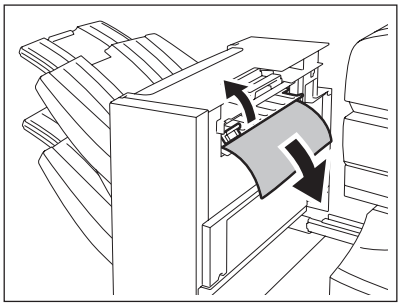

3 **Remove any misfed paper in the paper exit area.**

4 **Install the finisher to the equipment.**

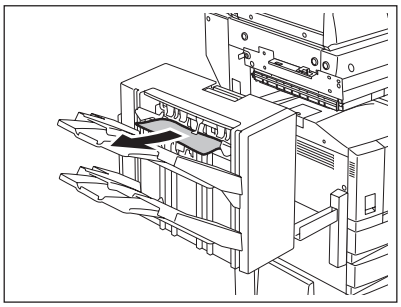

Caution

Be careful not to let your fingers be caught between the equipment and the finisher (optional).
This could injure you.

13. Paper Misfeed in the Saddle-stitch Finisher (optional: MJ-1025)

1 **Pressing the release lever of the finisher, move the finisher carefully away from the copier.**

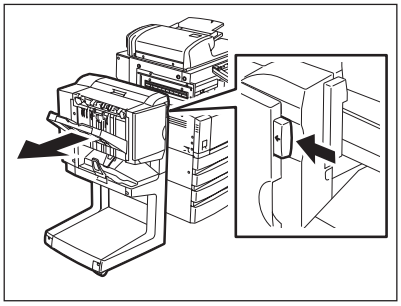

2 **Open the exit cover.**

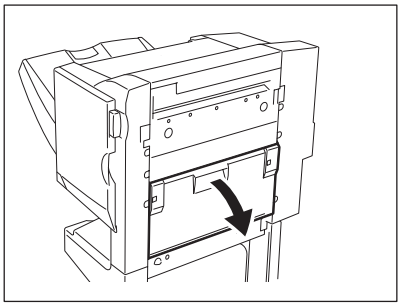

3 **Remove any misfed paper.**

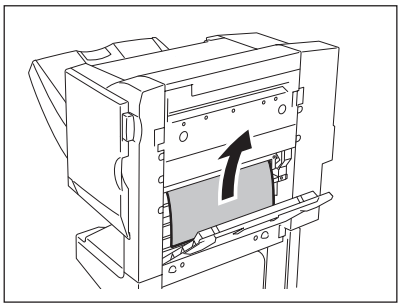

4 **Open the front cover.**

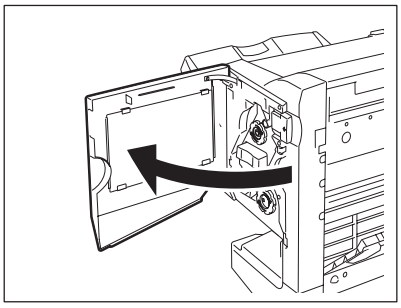

5 **Rotate the knob in the lower right clockwise.**

- Remove any misfed paper in the paper exit area of the saddle stitch unit.

6 **Close the exit cover and the front cover, and then return the finisher to the original position.**

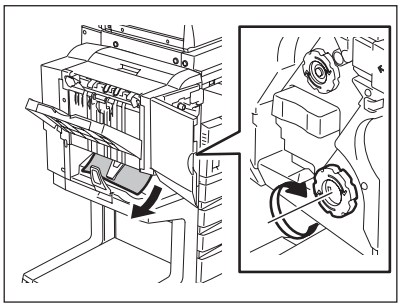

14. Paper Misfeed in the Staple Unit

1 **Open the front cover of the finisher.**

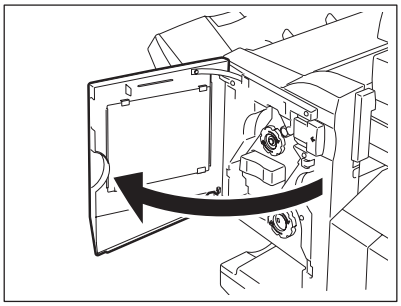

2 **Rotate the green knob in the middle clockwise.**

- When the staples are up, the window in the upper right of the knob becomes blue.

3 **Remove any misfed paper in the paper exit area.**

4 **Close the front cover.**

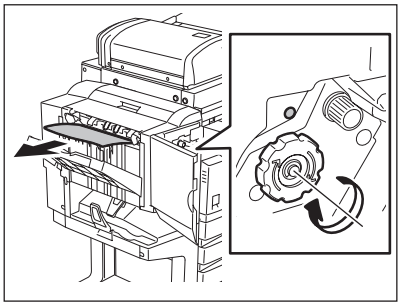

4. ADDING STAPLES (OPTIONAL)

When the staple in the cartridge runs out, “Check staple cartridge” appears.
Add staples to the cartridge according to the procedure below.

Saddle-stitch Finisher (MJ-1025)

1 Open the front cover of the finisher.

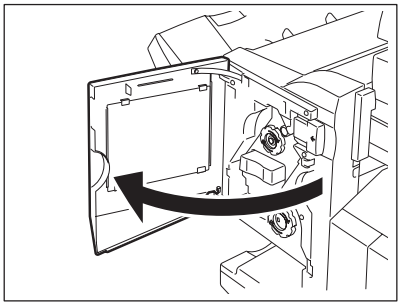

2 Hold the green handle to pull out the staple unit.

- Turn the upper green handle to position the mark shown in the right-hand illustration so that the staple cartridge comes out toward you.

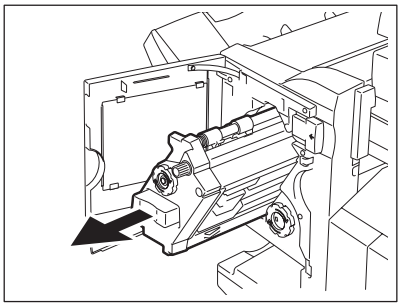

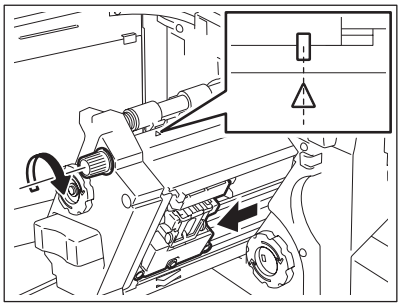

3 Holding the both sides of the green area of the staple cartridge, take out the cartridge.

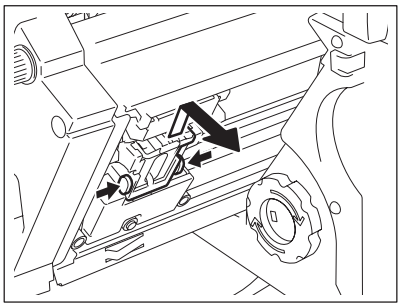

4 Take out the empty staple case.

- Push the buttons (marked PUSH) from both sides to release the lock.

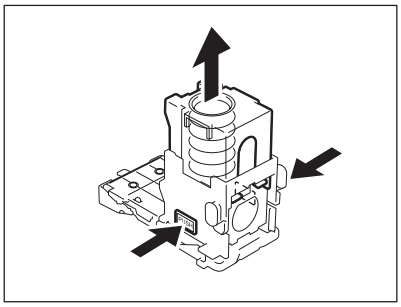

- Take out the empty staple case from the staple cartridge.

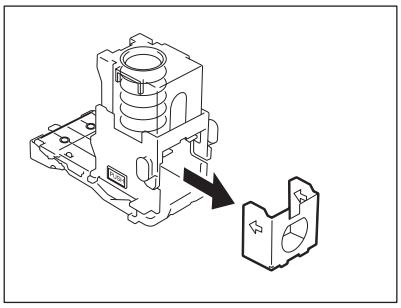

5 Push the new staple case into the staple cartridge until it clicks.

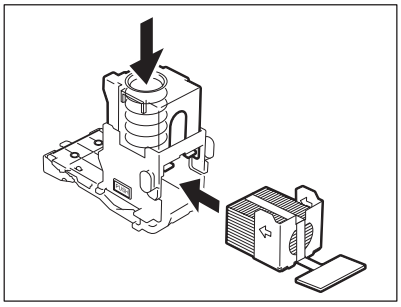

6 **Pull out the seal holding the staples.**

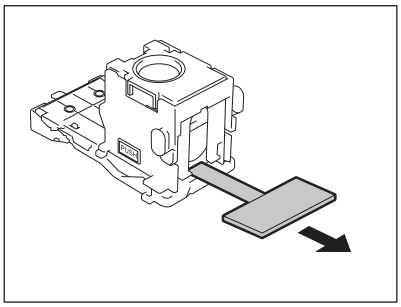

7 **Return the staple cartridge to the original position.**

8 **Return the staple unit to the original position, and then close the front cover.**

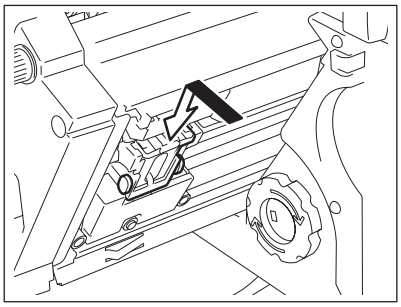

Single-staple Finisher (MJ-1022)

1 Pull the lever and move the finisher away carefully from the equipment.

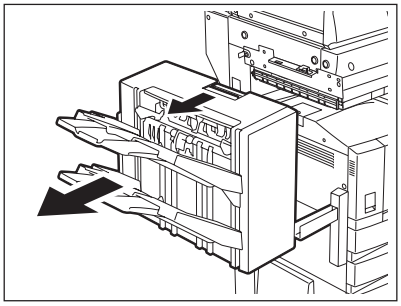

2 Take out the staple cartridge.

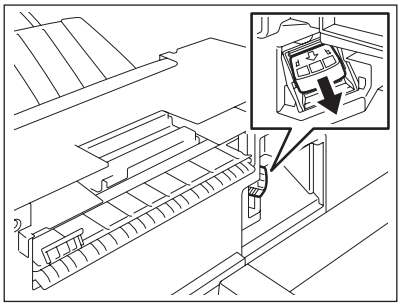

3 Remove the empty staple case from the staple cartridge.

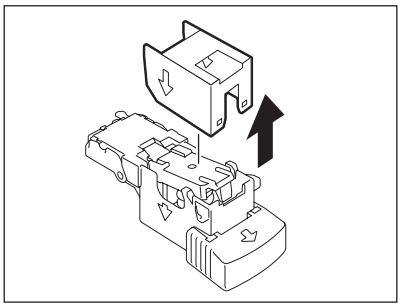

4 Set the new staple case.

- Push a new staple case into the staple cartridge until it clicks.
- Do not remove the seal holding the staples before the staple case is set in the cartridge.

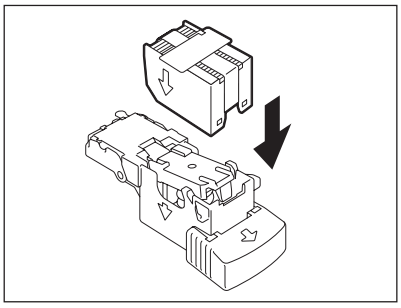

5 Pull out the seal holding the staples straight upward.

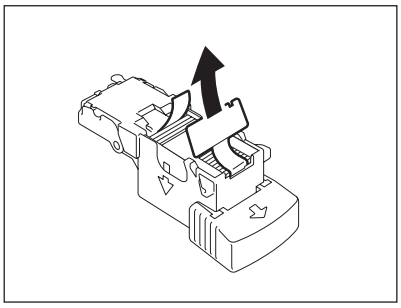

6 Return the staple cartridge to its original position.

- Insert the cartridge until it is caught by the latch and fixed with a click sound.

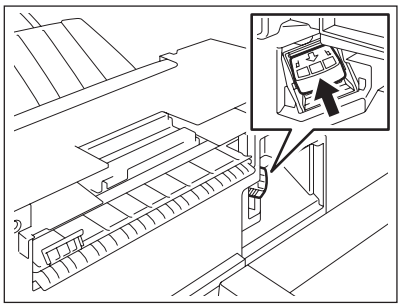

Tip

If “Check staple cartridge” remains, repeat the above procedure from step 1 to 6.

7 Install the finisher to the equipment.

Caution

Be careful not to let your fingers be caught between the equipment and the finisher (optional).
This could injure you.

5. REMOVING JAMMED STAPLES (OPTIONAL)

If copies have not been stapled in the staple mode, “Examine stapler” appears.
This shows that the staples are jammed. Remove them as described below.

Saddle-stitch Finisher (MJ-1025)

1 Open the front cover of the finisher.

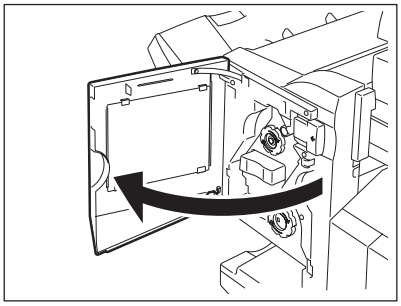

2 Hold the green handle to pull out the staple unit.

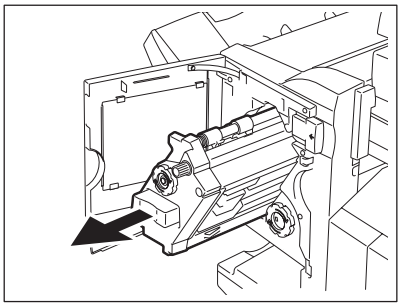

- Turn the upper green handle to position the mark shown in the right-hand illustration so that the staple cartridge comes out toward you.

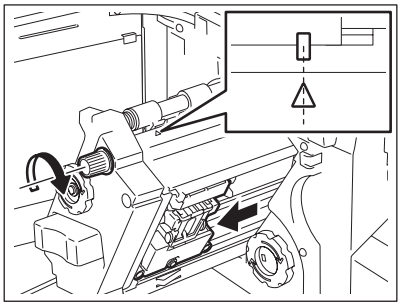

3 **Holding the both sides of the green area of the staple cartridge, take out the cartridge.**

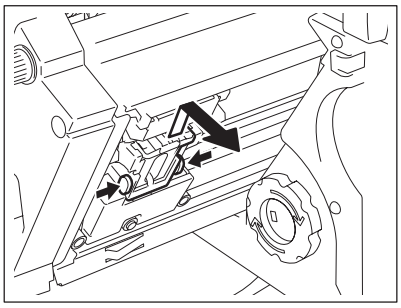

4 **Holding the knob on which the blue seal attaches, raise the staple cover.**

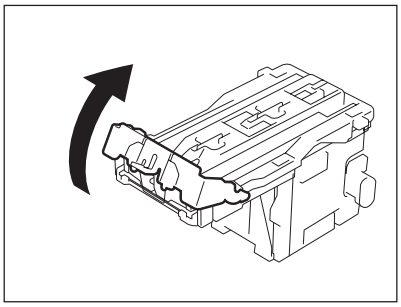

5 **Remove any jammed staples.**

6 **Holding the handle, lower the staple cover.**

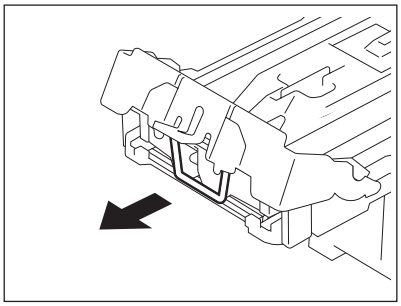

7 **Return the staple cartridge to the original position.**

8 **Return the staple unit to the original position, and then close the front cover.**

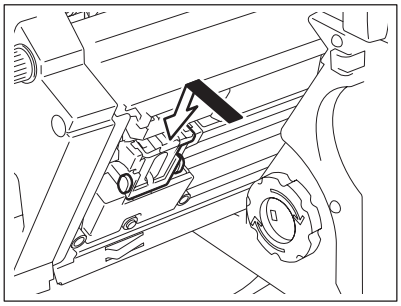

Single-staple Finisher (MJ-1022)

1 Pull the lever and move the finisher away carefully from the equipment.

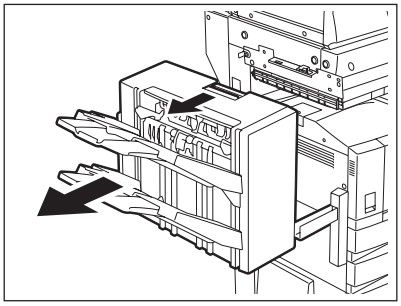

2 Take out the staple cartridge.

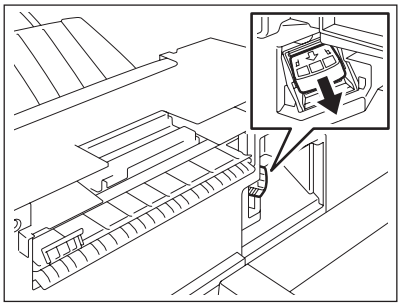

3 Lower the staple cover while holding the knob.

- A: stapler

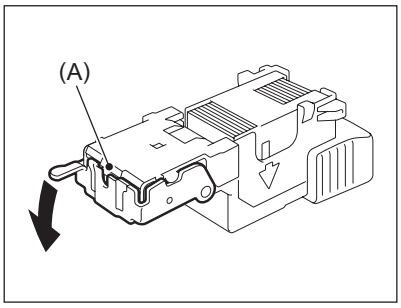

Caution

Do not touch the stapling area. The stapler could injure you.

4 Remove any jammed staples.

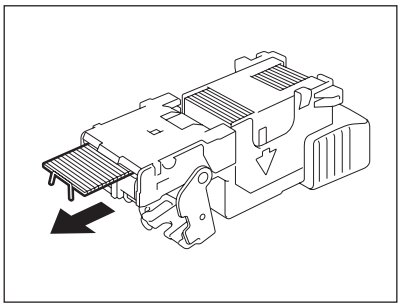

5 Return the staple cover to its original position while holding the knob.

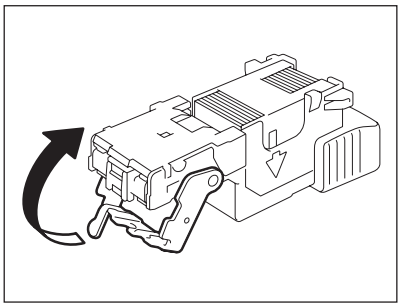

6 Return the staple cartridge to its original position.

- Insert the cartridge until it is caught by the latch and fixed with a click sound.

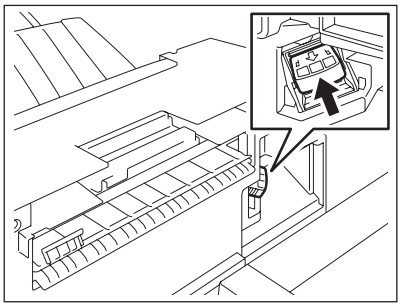

7 Install the finisher to the equipment.

Caution

Be careful not to let your fingers be caught between the equipment and the finisher (optional).
This could injure you.

6. DISPOSING OF THE PUNCHED PAPER BITS (OPTIONAL)

When paper bits punched from copies have accumulated to a certain level, “READY (HOLE PUNCH DUST BIN IS FULL)” appears. Dispose of the paper bits as described below.

1 Pressing the release lever of the finisher, move the finisher carefully away from the copier.

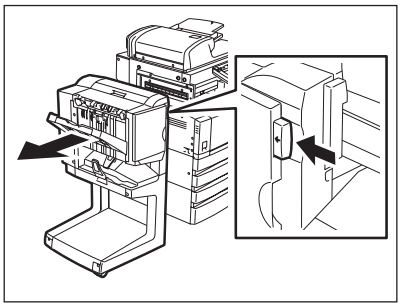

2 Pull out the case which contains the paper bits, and then dispose of them.

3 Return the case to the original position.

4 Return the finisher to the original position.

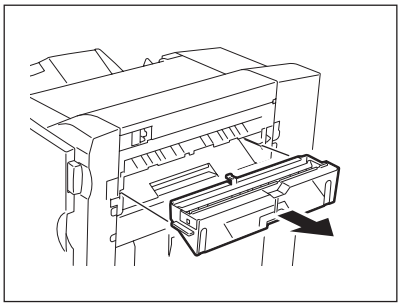

Call Service Symbol

Warning

Never attempt to repair, disassemble or modify the equipment by yourself. You could cause a fire or get an electric shock.
Always contact your service representative for maintenance or repair of the internal parts of the copier.

When the CALL SERVICE symbol blinks and “Misfeed in copier Press HELP” appears, output is no longer possible. Contact your service technician.

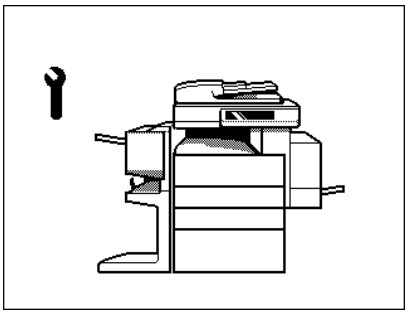

Note

When the CALL SERVICE or CLEAR PAPER symbol is blinking, if you press the [CLEAR] button and the digital key [8] together before you turn off the power, the corresponding error code will appear at the output quantity display area only while both are held down. Please provide the error code when you ask for service.

Tip

Since heaters are used to fix toner images to the paper, a heat-sensing safety circuit is incorporated in this equipment. After you turn ON the power switch, if a certain temperature is not attained within a specified period of time, the safety circuit assumes that something abnormal has happened and it stops the equipment’s operation.
This can happen when the temperature is low even if the equipment is not malfunctioning. If this occurs, turn the power OFF and then ON again. (To turn the power OFF, see "Turning off the Power (Shutting down)" Page 31.) Repeat this procedure twice, and if the problem still persists, turn OFF the power and contact your service technician.

Periodic Maintenance Message

When “Time for periodic maintenance” appears on the touch panel, the assistance from a qualified service technician is required. Contact your service technician.

13. MAINTENANCE

1. DAILY INSPECTION 286
2. SIMPLE TROUBLESHOOTING 288

1. DAILY INSPECTION

Items for Daily Check

Power ON/OFF status

We recommend that you turn the power switch ON at the startup everyday so as to use whenever needed. Also, be sure to turn the power OFF ("Turning off the Power (Shutting down)" 📖 Page 31) when you leave the office, except in the following cases:

- When the off-mode (or sleep mode) is set;
- When the weekly timer is in use;
- When the Fax (optional) is installed;

Weekly Maintenance

Cleaning the original glass, the original cover, the scanning area and the guide area.

To scan the original in good condition, we recommend that you clean the following items weekly.

(1) Scanning area

DO NOT use solvents such as alcohol. Clean the surface with a dried cloth or cloth moistened with a small amount of water.

(2) Original glass

(3) Guide

(4) Original cover

Clean the surface with a cloth moistened with a small amount of water, alcohol or neutral detergent, then wipe with a dry cloth over the surface.

- Be careful not to scratch the parts that you are cleaning.

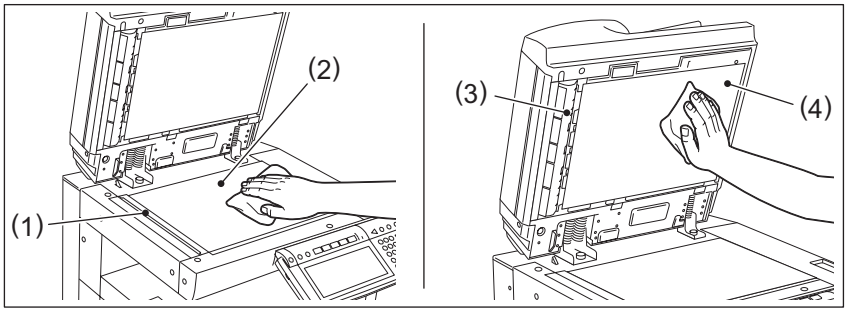

Caution

DO NOT use such solvents as thinner or alcohol when cleaning the surface of the equipment.

-This could warp the shape of the surface or leave it discoloured.

-When using a chemical cleaning pad to clean it, pay attention to any cautionary points.

Cleaning the Charger

If the inside of the charger wire become dirty, the dirt may appear on the copy.

* Before start cleaning, BE SURE TO TURN OFF THE POWER, then open the front cover.
  To turn the power OFF, see "Turning off the Power (Shutting down)" 📖 Page 31.

1 Open the front cover.

2 Clean the charger.

- Hold the cleaning knob, pull it out slowly and fully to the front and then push it back to the inside carefully and completely. Repeat this 2 or 3 times.

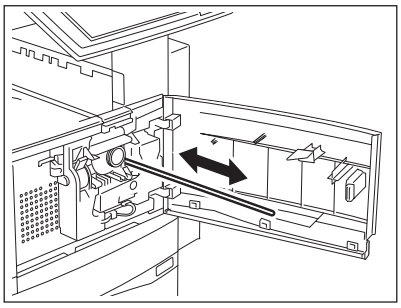

Note

Make sure that the charger knob is pushed in fully inside.

3 Close the front cover.

2. SIMPLE TROUBLESHOOTING

Check the following items and, if the problem still occurs, call your service representative for assistance.

Warning

NEVER attempt to repair, disassemble or modify the equipment by yourself. You could cause a fire or get an electric shock.
ALWAYS contact your service representative for maintenance or repair of the internal parts of the equipment.

Equipment does not Start

Item to be checked	Countermeasure	Reference page
Is the power cord plug securely inserted in the outlet?	Insert the power cord plug until it comes to a stop.	-
Is the front cover firmly closed?	Close the cover properly.	"1.DESCRIPTION OF EACH COMPONENT" 🕮 Page 20

Display does not Change when Buttons or Icons are Pressed

Item to be checked	Countermeasure	Reference page
Is the copier in the energy saving mode (Automatic Energy Saving mode)?	Press the [ENERGY SAVER] or [START] button on the control panel to clear the mode.(It takes a while for the copier to become ready.)	"Control Panel" 🕮 Page 23, "3.SWITCHING TO THE ENERGY-SAVING MODE" 🕮 Page 34
Is the power 'OFF' because the weekly timer is functioned?	Press the [START] button to return the power 'ON'.	See the [User Functions Guide].
Is the department code keyed in?	Key in the correct department code.	"Controlling the Use of the Copier with Department Codes" 🕮 Page 33
Is the "Warming up" message displayed?	Wait until the copier becomes ready.	"2.TURNING ON THE POWER SWITCH" 🕮 Page 31

Image Density is too Low

Items to be checked	Countermeasure	Reference page
Has the message “Install new toner cartridge” appeared on the screen?	Replace the toner cartridge.	"2.REPLACE TONER CARTRIDGE SYMBOL" 🕮 Page 254
Is the image density or the background adjustment set lighter than is standard?	Use the manual density buttons or the background adjustment function to adjust the image density properly.	"Manual Copy Density Mode" 🕮 Page 103, "1.BACKGROUND ADJUSTMENT" 🕮 Page 106

Image Density is too High

Items to be checked	Countermeasure	Reference page
Is the image density or the background adjustment set darker than standard?	Use the manual density buttons or the background adjustment function to adjust the image density properly.	"Manual Copy Density Mode" 🕮 Page 103, "1.BACKGROUND ADJUSTMENT" 🕮 Page 106

Images are Stained

Items to be checked	Countermeasure	Reference page
Is the original cover or the optional reversing automatic document feeder firmly closed?	Close the cover or the feeder properly to shut out any outer light.	"When Placing an Original on the Glass" 🕮 Page 52
Are the original glass, the original cover and the scanning area dirty?	Clean them up.	"Weekly Maintenance" 🕮 Page 286
Is the image density set properly?	Adjust the image density properly with the [AUTO] button or manual density buttons.	"6.COPY DENSITY ADJUSTMENT" 🕮 Page 103
Are 2-sided originals used?	As the other side of the originals can be seen, adjust the image density properly (lighter) with the background adjustment function.	"1.BACKGROUND ADJUSTMENT" 🕮 Page 106
Are originals with high transparency used?	Place a blank sheet of paper with originals of the same size or larger over the original.	"When Placing an Original on the Glass" 🕮 Page 52

Images are Blurred

Items to be checked	Countermeasure	Reference page
Does the entire originals lie properly on the surface of the glass?	Place the original on the glass or the reversing automatic document feeder and close the original cover firmly.	-
Is the paper moist?	Replace it with new paper.	-

Images are Partially Missing

Item to be checked	Countermeasure	Reference page
Are the original size and direction, as well as the reproduction ratio suitable for the paper size?	Select copy paper of the same size as the original, or set the reproduction ratio suitable for the paper size.	"1.PAPER SELECTION" 🕮 Page 74, "2.REDUCTION AND ENLARGEMENT COPYING" 🕮 Page 80
Is the margin on the copy set properly?	Adjust the image shift value.	"1.IMAGE SHIFT" 🕮 Page 110

Functions cannot be Set

Item to be checked	Countermeasure	Reference page
Are there functions that cannot be combined set together?	See the Copying Function Combination and Image Quality Adjustment Combination Matrices and set again.	"4.COPYING FUNCTION COMBINATION MATRIX" 🕮 Page 304

14. SPECIFICATIONS & OPTIONS

1. e-STUDIO230/280 SPECIFICATIONS....294
2. SPECIFICATIONS OF OPTIONS....297
3. PACKING LIST....303
4. COPYING FUNCTION COMBINATION MATRIX....304
   Combination Matrix 1/2....304
   Combination Matrix 2/2....305

1. e-STUDIO230/280 SPECIFICATIONS

Model Name		DP-2320/2820
Type		Desktop type
Original Glass		Fixed
Printing (Copying) System		Indirect electrophotographic method
Developing System		2-component magnetic brush developing
Fixing Method		Halogen lamp (2 pieces)
Photosensor Type		OPC
Original Scanning System		Flat surface scanning system (When the reversing automatic document feeder is installed: Fixed scanning system by feeding the original)
Original Scanning Sensor		Linear CCD sensor
Scanning Light Source		Xenon lamp
Resolution	Scanning	600 dpi x 600 dpi
	Writing	2,400 dpi (equive) x 600 dpi (Smoothing process)
Acceptable Originals		Sheets, books and 3-dimensional objects
Acceptable Original Size		Max. A3
Acceptable Copy Paper Size	Drawer	A3, A4, A4-R, A5-R, B4, B5, B5-R, FOLIO, LD, LG, LT, LT-R, ST-R, COMP, 13” LG, 8.5” SQ, 8K, 16K, 16K-R
	Bypass	Paper size within 100-297 mm (Length), 148-432 mm (Width)
Acceptable Copy Paper Weight	Drawer	64-105 g/m^2
	Bypass	64-209 g/m^2 (for continuous feed) 50-209 g/m^2 (for single feed) 64-105 g/m^2 (When the reversing automatic duplexer is used.)
Warm-up Time		Approx. 25 seconds
First Copy Time		5.4 seconds max.
Continuous Copy Speed		See “Continuous Copying Speed”.
Multiple Copying		Up to 999 copies (digital key entry)
Excluded Image Width	Copy	Leading edge: 3.0±2.0 mm, Trailing edge: 2.0±2.0 mm, Both edge: 2.0±2.0 mm
	Printer	Leading edge: 5.0±2.0 mm, Trailing edge: 5.0±2.0 mm, Both edge: 5.0±2.0 mm
Reproduction Ratio		Actual size: 100±0.5%
		Zoom: 25-400% (in 1% increments)
		For the reversing document feeder 25-200% (in 1% increments)

Paper Supply	Drawer	550 sheets (80 g/m^2)
	Bypass	100 sheets (80 g/m^2)
Toner Density Adjustment		Magnetic auto-toner system
Exposure Control		Automatic plus manual selection from 11 exposure step
Environment (for normal use)		Temperature: 10-30ºC, Humidity: 20-85% (No Condensation)
Power Requirements		220-240 V ±10%, 8 A (50/60 Hz) 110-127 V ±10%, 12 A (50/60 Hz) (for Saudi Arabia 100V version only)
Power Consumption		At least 1.6 kW (including optional equipments) At least 1.5 kW (including optional equipments) (for Saudi Arabia 100V version only)
Dimensions (equipment only)		637 mm (W) x 715 mm (D) x 739 mm (H)
Weight		Approx. 75 kg (equipment including developer and drum)
Space Occupied (equipment only)		1,002 mm (W) x 1,164 mm (D)
Storage Capacity		Max. 1,000 sheets or until the memory is full (Toshiba's own chart)

Continuous Copying Speed **Unit: sheets/min.**

Paper Type	Paper size	Feeder	e-STUDIO230	e-STUDIO280
Plain Paper	A4, A5-R, B5, LT, ST-R	Drawer	23	28
		Bypass	23	28
	A4-R, B5-R, LT-R	Drawer	21	21
		Bypass	21	21
	B4, FOLIO, LG, COMP	Drawer	18	18
		Bypass	18	18
	A3, LD	Drawer	16	16
		Bypass	16	16
Thick 1	A4, A5-R, B5, LT, ST-R	Drawer	16	16
		Bypass	16	16
	A4-R, B5-R, LT-R	Drawer	16	16
		Bypass	16	16
	B4, FOLIO, LG, COMP	Drawer	16	16
		Bypass	16	16
	A3, LD	Drawer	16	16
		Bypass	16	16
Thick 2	A4, A5-R, B5, LT, ST-R	Bypass	16	16
	A4-R, B5-R, LT-R	Bypass	16	16
	B4, FOLIO, LG, COMP	Bypass	16	16
	A3, LD	Bypass	16	16
Thick 3	A4, A5-R, B5, LT, ST-R	Bypass	16	16
	A4-R, B5-R, LT-R	Bypass	16	16
	B4, FOLIO, LG, COMP	Bypass	16	16
	A3, LD	Bypass	16	16

* The bypass copying speed is measured with the paper size specified.
* This specification varies depending on copying condition and environment.
* The paper mentioned above is Toshiba-recommended paper. Specifications and appearance are subject to change without notice in the interest of product improvement.

Reversing Automatic Document Feeder

Model Name	MR-3016
Copy Sides	1-side, Duplex
Number of Originals (A4)	100 originals (50-80 g/m^2)
Feeding Speed	45 originals/min. (A4, 100%)
Acceptable Originals	A3 - A5-R, LD - ST-R (A5 and ST are not acceptable)
Paper Weight	50-127 g/m^2 (1-sided original), 50-105 g/m^2 (2-sided original)
Power Source	Power supplied from the equipment
Dimensions	557 mm (W) x 530 mm (D) x 165 mm (H)
Weight	Approx.15 kg
Power Consumption	43.6 W max.

Large Capacity Feeder

Model Name	KD-1012
Acceptable Paper Size	A4
Paper Weight	64-105 g/m^2
Maximum Capacity	2,500 sheets (80 g/m^2) (Height: approx. 137 mm x 2)
Power Source	5 V, 24 V (supplied from the equipment)
Dimensions	623 mm (W) x 657 mm (D) x 307.5 mm (H) (incl. Stabilizer)
Weight	Approx. 27 kg
Power Consumption	50 W max.

Paper Feed Pedestal (1 drawer type)

Model Name	KD-1011
Acceptable Paper Size	A3 - A5-R, LD - ST-R (A5, ST and non-standard size are not acceptable)
Paper Weight	64-105 g/m^2
Maximum Capacity	550 sheets (80 g/m^2)
Dimensions	623 mm (W) x 657 mm (D) x 320 mm (H)
Weight	Approx. 21.5 kg

Additional Drawer Module

Model Name	MY-1021
Acceptable Paper Size	A3 - A5-R, LD - ST-R (A5, ST and non-standard size are not acceptable)
Paper Weight	64-105 g/m^2
Maximum Capacity	550 sheets (80 g/m^2)
Dimensions	526 mm (W) x 569.5 mm (D) x 107 mm (H)
Weight	Approx. 3.8 kg

Saddle-stitch Finisher (MJ-1025)

Model Name	MJ-1025	
Type	Floor type (Console type)	
Acceptable Paper Size	A3, A4, A4-R, A5-R, B4, B5, B5-R, FOLIO, LD, LG, LT, LT-R, ST-R, COMP	
Acceptable Paper Weight	50-209 g/m^2	
Number of Copies Stapled at a time (Including 2 covers (91-128 g/m^2))	Paper Size	64-80 g/m^2
	A4, A4-R, B5, LT, LT-R	50 sheets
	A3, B4, FOLIO, LD, LG, LT-R, COMP	25 sheets
Stapling Position	Front, Rear, Double	
Stitching Capacity (Including 2 covers (91-128 g/m^2))	Paper Size	64-80 g/m^2
	A3, A4-R, B4, LD, LT-R	10 sheets
Power Source	Supplied from the equipment	
Dimensions	538 mm (W) x 603 mm (D) x 1,011 mm (H) (When the sub-tray is retracted)	
Weight	Approx. 38 kg	
Power Consumption	60 W max.	

Tray Loading Capacity: (See "Available Conditions for Saddle Stitch" 🕮 Page 93)

(MJ-1025 with mixed paper not loaded)

Mode	Non-Sort	Sort/Group	Staples loaded
Tray No.	1	1	1
A4, A4-R, A5-R, B5, B5-R, LT, LT-R, ST-R	160 (1,000) *1	160 (1,000)	160 (1,000 sheets or 30 sets) *2
A3, B4, FOLIO, LD, LG, COMP	80 (500)	80 (500)	80 (500 sheets or 30 sets) *2

*1. Number of sheets including the load in the processing tray
*2. The value reached earlier by using condition

Unit: mm (with ±7 mm allowance)

Values in parentheses is the number of 80 g/m^2 sheets.

Sort/Group/Staple is not available with A5-R, ST-R, B5-R.

(MJ-1025 with mixed paper loaded)

Mode	Non-Sort	Sort/Group	Staples loaded
Tray No.	1	1	1
LD and LT	80 (500)	80 (500)	80 (500 sheets or 30 sets) *1
LG and LT-R	80 (500)	80 (500)	
A3 and A4	80 (500)	80 (500)	
B4 and B5	80 (500)	80 (500)	

*1. The value reached earlier by using condition

Unit: mm (with ±7 mm allowance)

Values in parentheses is the number of 80 g/m^2 sheets.

Single-staple Finisher (MJ-1022)

Model Name	MJ-1022	
Type	Hanging-type	
Acceptable Paper Size	A3, A4, A4-R, B4, B5, B5-R, A5-R, FOLIO, LD, LG, LT, LT-R, ST-R, COMP	
Acceptable Paper Weight	50-209 g/m^2	
Number of Copies Stapled at a time Acceptable weight for staple: 64-80 g/m^2	A4, A4-R, B5, LT, LT-R	30 sheets
	B4, LG	20 sheets
	A3, FOLIO, LD, COMP	15 sheets
Stapling Position	Rear	
Power Source	Supplied from the copier	
Dimensions	451 mm (W) x 539 mm (D) x 590 mm (H)	
Weight	Approx. 17 kg	
Power Consumption	40 W max.	

Tray Loading Capacity:

(MJ-1022 with mixed paper not loaded)

Mode	Non-Sort		Sort/Group		Staples loaded	
Tray No.	1	2	1	2	1	2
ST-R, A5-R, B5-R	30 (200)	99 (700)	-	-	-	-
LT, LT-R, A4, A4-R, B5	30 (200)	99 (700)	30 (200)	99 (700)	170 sheets or 30 sets *1	600 sheets or 50 sets *1
B4, LG	20 (140)	70 (490)	20 (140)	70 (490)	110 sheets or 30 sets *1	400 sheets or 50 sets *1
A3, FOLIO, LD, COMP	15 (100)	49 (350)	15 (100)	49 (350)	80 sheets or 30 sets *1	300 sheets or 50 sets *1

*1. The value reached earlier by using condition

Unit: mm (with ±7 mm allowance)

Values in parentheses is the number of 80 g/m^2 sheets.

(MJ-1022 with mixed paper loaded)

Mode	Non-Sort		Sort/Group		Staples loaded	
Tray No.	1	2	1	2	1	2
Combination of different width paper	15 (100)	49 (350)	-	-	-	-
LD and LT	15 (100)	49 (350)	15 (100)	49 (350)	80 sheets or 15 sets *1	300 sheets or 15 sets *1
LG and LT-R	15 (100)	49 (350)	15 (100)	49 (350)	110 sheets or 15 sets *1	400 sheets or 15 sets *1
A3 and A4	15 (100)	49 (350)	15 (100)	49 (350)	80 sheets or 15 sets *1	300 sheets or 15 sets *1
B4 and B5	15 (100)	49 (350)	15 (100)	49 (350)	110 sheets or 15 sets *1	400 sheets or 15 sets *1

*1. The value reached earlier by using condition

Unit: mm (with ±7 mm allowance)

Values in parentheses is the number of 80 g/m^2 sheets.

Bridge Unit

Model Name	KN-3520
Dimensions	417 mm (W) x 395 mm (D) x 154 mm (H) (incl. cover)
Weight	Approx. 4 kg

Job Separator

Model Name	MJ-5004
Acceptable Paper Size	A3, A4, A4-R, B4, B5, B5-R, A5-R, FOLIO
Acceptable Paper Weight	Upper stacker: 64-105 g/m^2 Lower stacker: 50-209 g/m^2
Loading Capacity	Upper stacker: 25 mm (150 sheets) Lower stacker: 40 mm (250 sheets) *1
Power Source	Supplied from the multifunctional digital systems
Dimensions	498 mm (W) x 415 mm (D) x 153 mm (H)
Weight	Approx. 3.3 kg

*1. Values in parentheses is the number of 80 g/m^2 sheets.

Offset Tray

Model Name	MJ-5005
Acceptable Paper Size	A3, A4, A4-R, B4, B5-R, FOLIO, LD, LG, LT, LT-R, COMP
Acceptable Paper Weight	50-209 g/m^2
Loading Capacity	39 mm (250 sheets) *1
Shift Amount	Approx. 30 mm
Power Source	Supplied from the multifunctional digital systems
Dimensions	500 mm (W) x 415 mm (D) x 169 mm (H)
Weight	Approx. 3.5 kg

*1. Values in parentheses is the number of 80 g/m^2 sheets.

Hole Punch Unit

Model Name	MJ-6005E	MJ-6005F	MJ-6005S
Acceptable Paper Size	A3, A4, A4-R, B4, B5, B5-R, FOLIO, LD, LG, LT, LT-R, COMP	A3, A4	A3, A4, A4-R, B4, B5, B5-R, FOLIO, LD, LG, LT, LT-R, COMP
Acceptable Paper Weight	64-200 g/m^2 (OHP film and specially treated paper are not available)		
Dimensions	104 mm (W) x 556 mm (D) x 174 mm (H)		
Weight	Approx. 2.6 kg		

	Number of punch holes and hole diameter	**Available paper sizes**
Japan and most of Europe MJ-6005E	2 holes (6.5 mm dia.)	A3, A4, A4-R, B4, B5, B5-R, FOLIO, LT, LT-R, LD, LG, COMP
France MJ-6005F	4 holes (6.5 mm dia.; 80 mm pitch)	A3, A4, LD, LT
Sweden MJ-6005S	4 holes (6.5 mm dia.; 70,21 mm pitch)	A3, A4, A4-R, B4, B5, B5-R, FOLIO, LD, LG, LT, LT-R, COMP

* The paper mentioned above is Toshiba-recommended paper. Specifications and appearance are subject to change without notice in the interest of product improvement.

3. PACKING LIST

Packing List	Operator’s Manual Pocket
	Unpacking Instructions
	Operator’s Manual
	Setup Report
	Customer satisfaction card
	PM Sticker

Combination Matrix 1/2

Already setting \ Next setting	1 to 1 Simplex	1 to 2 Duplex	2 to 1 Split	2 to 2 Duplex	Book to 2	Non-sort/ Non-staple	Sort	Group	Staple sort	Magazine sort	Magazine sort & Saddle stitch	Hole punch	Saddle stitch	Rotate sort	Rotate copier (A4,B5, A5,LT)	Mixed original sizes	ADF	SADF
1 to 1 Simplex		*1	*1	*1	*1	YES	YES	YES	YES	*1	*1	YES	*1	YES	--	YES	YES	YES
1 to 2 Duplex	*1		*1	*1	*1	YES	YES	YES	YES	YES	YES	YES	*1	YES	--	(YES)	YES	YES
2 to 1 Split	*1	*1		*1	*1	YES	YES	YES	YES	NO	NO	YES	*1	YES	--	YES	YES	YES
2 to 2 Duplex	*1	*1	*1		*1	YES	YES	YES	YES	YES	YES	YES	YES	YES	--	YES	YES	YES
Book to 2	*1	*1	*1	*1		YES	YES	YES	(YES)	NO	NO	YES	*1	NO	--	NO	YES	--
Non-sort/Non-staple	YES	YES	YES	YES	YES		*1	*1	*1	*1	*1	YES	*1	*1	--	YES	YES	YES
Sort	YES	YES	YES	YES	YES	*1		*1	*1	*1	*1	YES	*1	*1	--	YES	YES	YES
Group	YES	YES	YES	YES	YES	*1	*1		*1	*1	*1	YES	*1	*1	--	YES	YES	YES
Staple sort	YES	YES	YES	YES	YES	*1	*1	*1		*1	*1	YES	*1	*1	--	(YES)	YES	YES
Magazine sort	NO	YES	NO	YES	NO	*1	*1	*1	*1		*1	NO	*1	*1	--	NO	YES	YES
Magazine sort & Saddle stitch	NO	YES	NO	YES	NO	NO	*1	*1	*1	*1		NO	*1	*1	--	NO	YES	YES
Hole punch	YES	YES	YES	YES	YES	YES	YES	YES	YES	NO	NO		NO	NO	--	(YES)	YES	YES
Saddle stitch	NO	NO	NO	YES	NO	*1	*1	*1	*1	*1	*1	NO		*1	--	NO	YES	YES
Rotate sort	YES	YES	YES	YES	NO	*1	*1	*1	*1	*1	*1	NO	*1		--	YES	YES	YES
Rotate copier (A4,B5,A5,LT)	--	--	--	--	--	--	--	--	--	YES	YES	YES	YES	YES		YES	YES	YES
Mixed original sizes	YES	(YES)	YES	YES	NO	YES	YES	YES	(YES)	NO	NO	(YES)	NO	NO	--		YES	YES
ADF	YES	YES	YES	YES	--	YES	YES	YES	YES	YES	YES	YES	YES	YES	--	YES		*1
SADF	YES	YES	YES	YES	--	YES	YES	YES	YES	YES	YES	YES	YES	YES	--	YES	*1	
Image direction	YES	YES	YES	YES	YES	YES	YES	YES	YES	YES	YES	YES	YES	YES	--	YES	YES	YES
Book - Tablet	*1	*1	*1	YES	NO	YES	YES	YES	YES	NO	NO	YES	NO	YES	--	YES	YES	YES
Edge erase	YES	YES	YES	YES	YES	YES	YES	YES	YES	YES	YES	YES	YES	YES	--	NO	YES	YES
Image shift	YES	YES	YES	YES	YES	YES	YES	YES	YES	NO	NO	YES	NO	YES	--	NO	YES	YES
2IN1/4IN1	YES	YES	YES	YES	NO	YES	YES	YES	YES	NO	NO	YES	NO	YES	--	NO	YES	YES
Book centre erase	YES	YES	NO	NO	NO	YES	YES	YES	YES	NO	NO	NO	NO	YES	--	NO	YES	--
XY zoom	YES	YES	YES	YES	NO	YES	YES	YES	YES	NO	NO	YES	NO	NO	--	NO	YES	YES
Dual page	YES	YES	NO	NO	NO	YES	YES	YES	YES	NO	NO	YES	NO	NO	--	NO	YES	--
Mirror	YES	YES	YES	YES	NO	YES	YES	YES	YES	NO	NO	YES	NO	YES	--	NO	YES	YES
Trim/Mask	YES	YES	YES	YES	NO	YES	YES	YES	YES	NO	NO	YES	NO	YES	--	NO	YES	YES
Cover sheet: Top blank	YES	YES	YES	YES	NO	NO	YES	NO	YES	YES	YES	YES	YES	NO	--	YES*2	YES	YES
Cover sheet: Top copied	YES	YES	YES	YES	NO	NO	YES	NO	YES	YES	YES	YES	YES	NO	--	YES*2	YES	YES
Cover sheet: Both blank	YES	YES	YES	YES	NO	NO	YES	NO	YES	NO	NO	YES	NO	NO	--	YES*2	YES	YES
Cover sheet: Top copied back blank	YES	YES	YES	YES	NO	NO	YES	NO	YES	NO	NO	YES	NO	NO	--	YES*2	YES	YES
Sheet insertion	YES	YES	YES	YES	NO	NO	YES	NO	YES	NO	NO	YES	NO	NO	--	YES*2	YES	YES
Date stamp	YES	YES	YES	YES	YES	YES	YES	YES	YES	YES	YES	YES	NO	YES	--	NO	YES	YES
Page number	YES	YES	YES	YES	YES	YES	YES	YES	YES	YES	YES	YES	NO	YES	--	NO	YES	YES
Job build	*5	*5	*5	*5	NO	*3	*3	*3	*3	NO	NO	*3	*3	*3	--	*3	YES	YES

YES: The functions can be combined.

NO: The function set first takes precedence.

(YES): The result is not guaranteed although the function are operable.

*1: The function set last takes precedence.

*2: Only AMS (Automatic Magnification Selection).

*3: Bookbinding margin setting in the image shift functions cannot be combined with the dual page setting.

*4: The setting cannot be changed from 2nd job or later.

*5: The type of original (1-sided or 2-sided) can be changed.

Combination Matrix 2/2

Already setting \ Next setting		Image direction	Book - Tablet	Edge erase	Image shift	2IN1/ 4IN1	Book centre erase	XY zoom	Dual page	Mirror	Trim/ Mask	Cover sheet				Sheet insertion	Date stamp	Page number	Job build
												Top blank	Top copied	Both blank	Top copied back blank				
1 to 1 Simplex		YES	*1	YES	YES	*1	YES	YES	*1	YES	YES	YES	YES	YES	YES	YES	YES	YES	*5
1 to 2 Duplex		YES	*1	YES	YES	*1	YES	YES	*1	YES	YES	YES	YES	YES	YES	YES	YES	YES	*5
2 to 1 Split		YES	*1	YES	YES	*1	NO	YES	NO	YES	YES	YES	YES	YES	YES	YES	YES	YES	*5
2 to 2 Duplex		YES	YES	YES	YES	*1	NO	YES	NO	YES	YES	YES	YES	YES	YES	YES	YES	YES	*5
Book to 2		YES	NO	YES	YES	NO	NO	NO	NO	NO	NO	NO	NO	NO	NO	NO	YES	YES	NO
Non-sort/Non-staple		YES	YES	YES	YES	YES	YES	YES	YES	YES	YES	*1	*1	*1	*1	*1	YES	YES	*3
Sort		YES	YES	YES	YES	YES	YES	YES	YES	YES	YES	YES	YES	YES	YES	YES	YES	YES	*3
Group		YES	YES	YES	YES	YES	YES	YES	YES	YES	YES	NO	NO	NO	NO	NO	YES	YES	*3
Staple sort		YES	YES	YES	YES	YES	YES	YES	YES	YES	YES	YES	YES	YES	YES	YES	YES	YES	*3
Magazine sort		YES	NO	YES	NO	NO	NO	NO	NO	NO	NO	YES	YES	NO	NO	NO	YES	YES	NO
Magazine sort & Saddle stitch		YES	NO	YES	NO	NO	NO	NO	NO	NO	NO	YES	YES	NO	NO	NO	YES	YES	NO
Hole punch		YES	YES	YES	YES	YES	NO	YES	YES	YES	YES	YES	YES	YES	YES	YES	YES	YES	*3
Saddle stitch		YES	NO	YES	NO	NO	NO	NO	NO	NO	NO	YES	YES	NO	NO	NO	NO	NO	*3
Rotate sort		YES	YES	YES	YES	YES	YES	NO	NO	YES	YES	NO	NO	NO	NO	NO	YES	YES	*3
Rotate copier (A4,B5,A5,LT)		YES	YES	YES	*1	YES	*1	*1	YES	YES	YES	YES	YES	YES	YES	YES	YES	YES	--
Mixed original sizes		YES	YES	NO	NO	NO	NO	NO	NO	NO	NO	NO	NO	NO	NO	NO	NO	NO	*3
ADF		YES	YES	YES	YES	YES	--	YES	--	YES	YES	YES	YES	YES	YES	YES	YES	YES	YES
SADF		YES	YES	YES	YES	YES	--	YES	--	YES	YES	YES	YES	YES	YES	YES	YES	YES	YES
Image direction			YES	YES	YES	YES	YES	YES	YES	YES	YES	YES	YES	YES	YES	YES	YES	YES	*4
Book - Tablet		YES		YES	NO	NO	NO	YES	NO	YES	YES	YES	YES	YES	YES	YES	NO	NO	*4
Edge erase		YES	YES		YES	YES	NO	YES	YES	NO	NO	YES	YES	YES	YES	YES	YES	YES	YES
Image shift		YES	NO	YES		YES	YES	YES	YES*3	YES	YES	YES	YES	YES	YES	YES	YES	YES	*4
2IN1/4IN1		YES	NO	YES	YES		NO	NO	NO	NO	NO	NO	NO	NO	NO	NO	YES	YES	NO
Book centre erase		YES	NO	NO	YES	NO		YES	NO	YES	NO	NO	NO	NO	NO	NO	YES	YES	*4
XY zoom		YES	YES	YES	YES	NO	YES		NO	NO	NO	YES	YES	YES	YES	YES	YES	YES	NO
Dual page		YES	NO	YES	YES*3	NO	NO	NO		NO	NO	NO	NO	NO	NO	NO	YES	YES	YES
Mirror		YES	YES	NO	YES	NO	YES	NO	NO		--	YES	YES	YES	YES	YES	YES	YES	NO
Trim/Mask		YES	YES	NO	YES	NO	NO	NO	NO	--		YES	YES	YES	YES	YES	YES	YES	NO
Cover sheet	Top blank	YES	YES	YES	YES	NO	NO	YES	NO	YES	YES		--	--	--	YES	YES	YES	NO
	Top copied	YES	YES	YES	YES	NO	NO	YES	NO	YES	YES	--		--	--	YES	YES	YES	NO
	Both blank	YES	YES	YES	YES	NO	NO	YES	NO	YES	YES	--	--		--	YES	YES	YES	NO
	Top copied back blank	YES	YES	YES	YES	NO	NO	YES	NO	YES	YES	--	--	--		YES	YES	YES	NO
Sheet insertion		YES	YES	YES	YES	NO	NO	YES	NO	YES	YES	YES	YES	YES	YES		YES	YES	NO
Date stamp		YES	NO	YES	YES	YES	YES	YES	YES	YES	YES	YES	YES	YES	YES	YES		YES	*4
Page number		YES	NO	YES	YES	YES	YES	YES	YES	YES	YES	YES	YES	YES	YES	YES	YES		*4
Job build		*4	*4	YES	*4	*4	*4	NO	YES	NO	NO	NO	NO	NO	NO	NO	*4	*4	

YES: The functions can be combined.

NO: The function set first takes precedence.

(YES): The result is not guaranteed although the function are operable.

*1: The function set last takes precedence.

*2: Only AMS (Automatic Magnification Selection).

*3: Bookbinding margin setting in the image shift functions cannot be combined with the dual page setting.

*4: The setting cannot be changed from 2nd job or later.

*5: The type of original (1-sided or 2-sided) can be changed.

INDEX

Numerics

1-Sided Originals -> 1-Sided Copies (default setting) 97
1-Sided Originals -> 2-Sided Copies 97
2 IN 1/4 IN 1 117
2-Sided Originals -> 1-Sided Copies 99
2-Sided Originals -> 2-Sided Copies 98

A

Acceptable Copy Paper Types and Sizes 35
Acceptable Original Types and Sizes 51
Acceptable Original Types and Sizes/Maximum Number of Sheets that can be Stored 51
Acceptable paper size 100
ACCESS button 24
Adding a blank cover 126
Adding a copied cover 126
ADDING STAPLES (OPTIONAL) 274
  Saddle-stitch Finisher (MJ-1025) 274
  Single-staple Finisher (MJ-1022) 277
Address Book Entry 174
ADDRESS REGISTRATION FROM LOG LISTS 205
Admin Password 238, 239, 243, 247
Advanced Function 184
Advice 8
Auto Exposure 48
Auto Job Start 31, 57, 58
AUTO JOB START (JOB PRESET) 57
Automatic Copy Density Modes 103
Automatic duplexer 20
Automatic Function Clear 24, 29
Automatic Magnification Selection (AMS) 80
Automatic paper selection 48
Automatic Paper Selection (APS) 74
Available Conditions for Saddle Stitch 93
Available paper size 95
Available paper sizes for the hole punch 94

B

BACKGROUND ADJUSTMENT 106
basic screen 24, 27
Before copying on an envelope 68
BLINKING GRAPHIC SYMBOLS 252
BOOK CENTRE ERASE 114
Bookbinding margin 111
Booklet mode 91
Book-type Originals 53
Book-type Originals to 2-Sided Copies 100
BYPASS COPYING 61
Bypass Copying on Non-Standard-Size Paper 65
Bypass Copying on Standard Size Paper 62
bypass feeding 12, 62, 92, 119
BYPASS MISFEED 252
Bypass tray 20

C

CALL SERVICE SYMBOL 253
Call Service Symbol 284
CALL SERVICE SYMBOL/ PERIODIC MAINTENANCE MESSAGE 284
Caution 8
CHANGING INPUT DATA 226, 243
Changing the Data of Template 243
Changing the Data of User Group 245
Changing the Paper Size of the Drawer 38
Changing the Paper Size of the Drawer/ Setting the Drawer for Special Uses 38
CHECK ORIGINALS 252
Cleaning the Charger 287
CLEAR button 24
CLEAR PAPER SYMBOL 259
Clearing the Drawer for Special Uses 44
Clearing the Functions Selected 29
Coloured paper 41, 126, 129
Confirming and Canceling Auto Job Start 58
Confirming the Destinations 182
CONFIRMING THE STATUS OF FAX/ INTERNET FAX JOB 200
CONFIRMING THE STATUS OF SCAN 201
Continuous Copying Speed 296
Continuous Feed Mode 55, 141
Continuous original feed mode 48
CONTINUOUS/SINGLE ORIGINAL FEEDING 141
Control Panel 20, 23
Controlling the Use of the Copier with Department Codes 33
COPY & FILE 147

COPY button 23
COPY DENSITY ADJUSTMENT 103
Copy paper 35, 41
Copying function combination 291
Copying on an envelope 69
Copying Procedure 48
Cost Advantage 7
COVER COPYING 126
Cover sheet copying 59
Creating a Bookbinding Margin 111
Creating a Right or Left Margin 110
Currently selected drawer size 27

D

DAILY INSPECTION 286
Date and time 27
default setting 23, 24
Deleting a Job 191, 195
Deleting a Job from the List 199
Deleting a Private Print 197
Deleting a User Group 249
DELETING BOX 228
DELETING TEMPLATE 247
department code 33
Dependability 7
DESCRIPTION OF EACH COMPONENT 20
DESCRIPTION OF THE BLINKING GRAPHIC SYMBOLS 252
DIGITAL KEYS 24
Direct Entry 173
DIRECTION OF COPY IMAGES IN “1 TO 2” AND “2 TO 1” 138
DIRECTION OF DUPLEX COPY IMAGES IN “2 TO 2” 140
DISCLAIMER NOTICE 17
DISPOSING OF THE PUNCHED PAPER BITS (OPTIONAL) 283
drawer feeding 92, 119
Drawer for cover sheet 41, 127, 128
Drawer for sheet insertion 41
Drawer for special sheets. 41
DRAWER MISFEED 252
Drawer Misfeed 263
Drawers 20
DUAL-PAGE 115
Dual-page 61
DUPLEX COPYING 96
DUPLEXER MISFEED 252
During Maintenance or Inspection 15

E

EDGE ERASE 113
Edge erase 61
Edge Erase Copying 113
e-FILING 221
e-FILING button 23
e-FILING FUNCTIONS 222
ENERGY SAVER button 24, 34, 288
Enlargement copying 80, 117
Environmental Harmony 7
Equipment does not Start 288
ERROR lamp 24
e-STUDIO230/280 SPECIFICATIONS 294
Execute Test Printing 230
EXTENSION button 23

F

FAX button 23
Features of the e-STUDIO230/280 9
Feeder 35, 296
Finisher (optional MJ-1022) 271
FINISHER/HOLE PUNCH UNIT MISFEED 253
Finishing Modes and Finishers (Optional) 84
For Making 1-sided, 2-sided and Book-type Copying 96
Front cover 20, 85
FUNCTION CLEAR button 24
Function setting area 27
Functions cannot be set 291
FUSER MISFEED 252

G

General 7
GENERAL COPYING PROCEDURES 48
GENERAL PRECAUTIONS 10
Group copying 87
Group Entry 175

H

Handling and Storing Paper 37

HELP button 23
High Productivity 7
Hole Punch Mode (Optional) 94
Hole punch unit 85
HOW TO MAKE COPIES 47

I

Image Density is too High 289
Image Density is too Low 289
IMAGE EDITING 121
IMAGE SHIFT 110
Image shift 61, 238, 240
Images are Blurred 290
Images are partially missing 291
Images are Stained 290
In the Continuous Feed Mode 55
Initial (default) Settings 48
Inner tray 20
INSERT 1 .....43, 44
INSERT 2 .....43, 44
INSERT SOURCE 2 130
Inside the Single-feed Mode 56
INTERNET FAX 167, 168
Internet Fax Transmission Overview 168
INTERRUPT button 24, 59
INTERRUPT COPYING 59
Items for Daily Check 286

J

JAM RELEASING UNIT MISFEED 252
Jam Releasing Unit Misfeed 262
JOB BUILD 134
JOB STATUS 189, 190
JOB STATUS button 24, 50, 58

L

Large Capacity Feeder 264
LOG LIST 202

M

Machine Balance 7
MAGAZINE SORT 119
Magazine Sort 91, 119
MAGAZINE SORT &
SADDLE STITCH button 91, 92
Magazine Sort & Saddle Stitch Mode
(Booklet Mode) 91
Main Components 20
MAINTENANCE 285
Manual Copy Density Mode 103
Manual Paper Selection 76
Masking 121
Maximum capacity for saddle stitch 93
Maximum number of sheets that can be
set 39, 45
Maximum Number of Sheets that can be
Stapled 90
Maximum Number of Sheets that can be
Stored 51
Maximum sheet capacity 35
Message Display 27
Mirror Image 123
MJ-1022 with mixed paper loaded 301
MJ-1022 with mixed paper not loaded 300
MJ-1025 with mixed paper loaded 299
MJ-1025 with mixed paper not loaded 299
MONITOR/PAUSE button 24
Moving a Print Job 193
Multi-address Transmission 181

N

Negative/Positive Reversal 124
NOTICE TO USERS 5
Number of punch holes and hole
diameter 95, 302

O

Operator's Manual Pocket 20, 303
Optimum image Quality 7
Optional 20
Optional Equipment 21
OPTIONAL FEEDER MISFEED 252
ORIGINAL MODE 102
Original scale 20

P

PACKING LIST 303
PAGE NUMBERING 132
Paper Misfeed
in the Automatic Duplexer 265
in the Fuser Unit 266

in the Hole Punch Unit 270
in the Large Capacity Feeder/
Additional drawer module (optional) 264
in the Offset Tray Unit or
Job Separator Unit (Optional) 267
in the Relay Unit (optional) 268
in the Reversing Automatic Document
Feeder (optional) 259
in the Saddle-stitch Finisher
(optional MJ-1025) 272
in the Single-staple Finisher
(optional MJ-1022) 271
on the Bypass Feed Unit 265
Paper Misfeed in the Finisher
(optional MJ-1025) 269
Paper Misfeed in the Staple Unit 273
PAPER SELECTION 74
Paper Size 35
paper with a watermark 41
Pause/Resume 192
Performing the Proof Print 194
PERIODIC MAINTENANCE MESSAGE 284
Periodic Maintenance Message 284
Power switch 20
Precaution for Internet Transmission 168
Precautions for Using the Reversing
Automatic Document Feeder 54
PREFACE 8
PRINT DATA/MEMORY RX/
FAX communication 24
PRINT JOB LIST 191
Print the whole document 229
PRINTING SEND/RECEIVE LOG LIST OF
FAX 207
PRINTING STORED DOCUMENT 229
Printing the Stored Document with Added/
Changed Settings 231
Priority Transmission 185
Private Print 196
PRIVATE PRINT JOB 196
PROOF PRINT JOB 194

R

RECALLING TEMPLATE 235
Receiving from POP3 Server 188
Receiving from SMTP Server 188
RECEIVING INTERNET FAX 187
Receiving Modes 187
REDUCTION AND ENLARGEMENT
COPYING 80
REGISTERING TEMPLATE 238
Registering the template in the Public
Template Group 238
Registering the template in the
User Group 240
RELAY UNIT MISFEED 253
Remaining paper level 27
REMOVING JAMMED STAPLES
Saddle-stitch Finisher (MJ-1025) 279
Single-staple Finisher (MJ-1022) 281
REMOVING JAMMED STAPLES
(OPTIONAL) 279
REPLACE TONER CARTRIDGE 252
REPLACE TONER CARTRIDGE SYMBOL 254
Replacing the Toner Cartridge 254
Reproduction ratio 27, 48
Rotate Sort Mode 88

S

SADDLE STITCHING UNIT MISFEED 253
Saddle-stitch Finisher (MJ-1025) 298
SCAN button 23, 235
SCAN SETTING IN THE TOUCH PANEL 152
SCAN TO e-FILING 154
SCAN TO E-MAIL 162
SCAN TO FILE 158
Scanning Procedure 152
SCANNING THE IMAGES 151
Searching Address Using LDAP Server 180
Searching by Address 178
Searching by ID Number 177
SELECTING FINISHING MODES 84
Sending 2-sided Originals 184
SENDING INTERNET FAX 170
Service and Support Benefits 7
SETTING COPY PAPER 35
Setting Letters 30
Setting Magazine Sort & Saddle Stitch
Mode 92
SETTING OF BASIC COPY MODES 73
SETTING ORIGINALS 51

Setting Paper to the Large Capacity Feeder (Optional) 44
Setting Staple Sort Mode 89
Setting the Drawer for Special Uses 38, 41
Setting the Transmission Conditions 170
SETTING UP BOX 224
Setup Report 303
SHARPNESS ADJUSTMENT 107
SHEET INSERTION MODE 129
Sheet Originals 52
SIMPLE TROUBLESHOOTING 288
Single-feed Mode 56, 142
Single-staple Finisher (MJ-1022) 300
Sort copying 87
Sort/Group Copying 87
SPECIFICATIONS & OPTIONS 293
SPECIFICATIONS OF OPTIONS 297
Specifying Both Original Size and Copy Size 81
Specifying the Recipients 173
Stable Image Quality 7
Staple Sort 89
Staple Sorting 89
START button 24
STATUS 208
Sticker labels 9, 35, 61
STOP button 24
STOPPING THE COPY OPERATION 60
STORE TO E-FILING 144
Storing a Non-Standard Size in MEMORY 67
STORING ORIGINALS 143
Sub-trays 85
Supplies/Parts 7
SWITCHING TO THE ENERGY-SAVING MODE 34

T

TEMPLATE 233, 234
TEMPLATE button 23, 236, 238
TEXT/PHOTO mode 48
The recommended paper 37
Thick 1 ..... 35, 37, 43, 296
Thick 2 .....35, 37
Thick 3 .....35, 37
TIME & DATE STAMP 131
Tip 8
To Restore the Invalid Code (print error) to the Normal Print 198
Toner 7, 20
TOP COPIED button 127, 128
TOSHIBA QUALITY IS SECOND TO NONE 6
Toshiba-recommended paper/Handling and Storing Paper 37
Total copy quantity 27
TOUCH PANEL 20, 24, 27
Touch panel contrast adjustment volume 20
Touch-buttons 27
Tray load capacity 90, 93
Trays 85
Trimming 121
Trimming/Masking 121
TURNING ON THE POWER SWITCH 31
Types of originals 51

U

Unpacking Instructions 303
Upper cover 85
User Friendly 7
USER FUNCTIONS button 23
USING THE EDITING FUNCTIONS 109
Using the Reduction/Enlargement Zoom Buttons or One-touch Zoom Buttons 82

W

Warning 8
Weekly Maintenance 286
When Coming Across the Situations below 50
When handling supplies 16
When Installing or Moving 10
When Placing an Original on the Glass 52
When recalling Template in the Public Group 235
When recalling Template in the User Group 236
WHEN THE GRAPHIC SYMBOLS BLINK ON THE TOUCH PANEL 251
WHEN USING THE DEPARTMENT CODES 198

When Using the Multifunctional
Digital Systems 13
When Using the Reversing Automatic
Document Feeder 54

X

X-Y ZOOM 125

Printed in China
DP-2320/2820
OME04002800

MULTIFUNCTIONAL DIGITAL SYSTEMS
Operator's Manual for Basic Function

e-STUDIO230/280

TOSHIBA TEC CORPORATION

1-1, KANDA NISHIKI-CHO, CHIYODA-KU, TOKYO, 101-8442, JAPAN

6LA91394000 欧
R04022053500-TTEC
2004-06

© 2004 TOSHIBA TEC CORPORATION All rights reserved

Free Manuals Download Website

http://myh66.com

http://usermanuals.us

http://www.somanuals.com

http://www.4manuals.cc

http://www.manual-lib.com

http://www.404manual.com

http://www.luxmanual.com

http://aubethermostatmanual.com

Golf course search by state

http://golfingnear.com

Email search by domain

http://emailbydomain.com

Auto manuals search

http://auto.somanuals.com

TV manuals search

http://tv.somanuals.com