ST-200

Techno Strobe™ 200

USER MANUAL

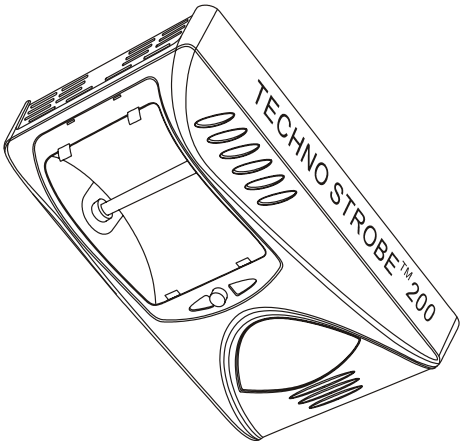

Chauvet, 3000 N 29th Ct, Hollywood, FL 33020 U.S.A
(800) 762-1084 – (954) 929-1115
FAX (954) 929-5560
www.chauvetlighting.com

Download from Www.Somanuals.com. All Manuals Search And Download.

TABLE OF CONTENT

BEFORE YOU BEGIN **3**

WHAT IS INCLUDED 3
UNPACKING INSTRUCTIONS 3
SAFETY INSTRUCTIONS 3

INTRODUCTION **4**

FEATURES 4
PRODUCT OVERVIEW 4

SETUP **5**

LAMP 5
Lamp installation *5*
MOUNTING 6
Orientation *6*
Rigging *6*
USING A COLOR GEL 6

OPERATING INSTRUCTIONS **7**

OPERATING MODES 7
Stand Alone *7*
Unison Strobe *7*

APPENDIX **8**

MAINTENANCE 8
RETURNS PROCEDURE 8
CLAIMS 8
GENERAL TROUBLESHOOTING 9
TECHNICAL SPECIFICATIONS 10

Download from Www.Somanuals.com. All Manuals Search And Download.

BEFORE YOU BEGIN

What is included

- ST-200
- Power cord with plug
- 200w Xenon lamp (Installed)
- Warranty Card & Manual

Unpacking Instructions

Immediately upon receiving a fixture, carefully unpack the carton, check the contents to ensure that all parts are present, and have been received in good condition. Notify the shipper immediately and retain packing material for inspection if any parts appear damaged from shipping or the carton itself shows signs of mishandling. Save the carton and all packing materials. In the event that a fixture must be returned to the factory, it is important that the fixture be returned in the original factory box and packing.

Safety Instructions

Please read these instructions carefully, which includes important information about the installation, usage and maintenance?

- Please keep this User Guide for future consultation. If you sell the unit to another user, be sure that they also receive this instruction booklet.
- Always make sure that you are connecting to the proper voltage and that the line voltage you are connecting to is not higher than that stated on decal or rear panel of the fixture.
- This product is intended for indoor use only!
- To prevent risk of fire or shock, do not expose fixture to rain or moisture. Make sure there are no flammable materials close to the unit while operating.
- The unit must be installed in a location with adequate ventilation, at least 50cm from adjacent surfaces. Be sure that no ventilation slots are blocked.
- Always disconnect from power source before servicing or replacing lamp or fuse and be sure to replace with same lamp source.
- Secure fixture to fastening device using a safety chain. Never carry the fixture solely by its head. Use its carrying handles.
- Maximum ambient temperature is Ta: 40°. Do not operate fixture at temperatures higher than this.
- In the event of serious operating problem, stop using the unit immediately. Never try to repair the unit by yourself. Repairs carried out by unskilled people can lead to damage or malfunction. Please contact the nearest authorized technical assistance center. Always use the same type spare parts.
- Don't connect the device to a dimmer pack.
- Make sure power cord is never crimped or damaged.
- Never disconnect power cord by pulling or tugging on the cord.
- Avoid direct eye exposure to lamp.

Caution! ***There are no user serviceable parts inside the unit. Do not any repairs yourself. In the unlikely event your unit may require service, please contact CHAUVET.***

Download from Www.Somanuals.com. All Manuals Search And Download.

INTRODUCTION

Features

- audio sensitivity adjustment
- manual strobe speed control
- manual strobe intensity control
- 1 year warranty

Product Overview

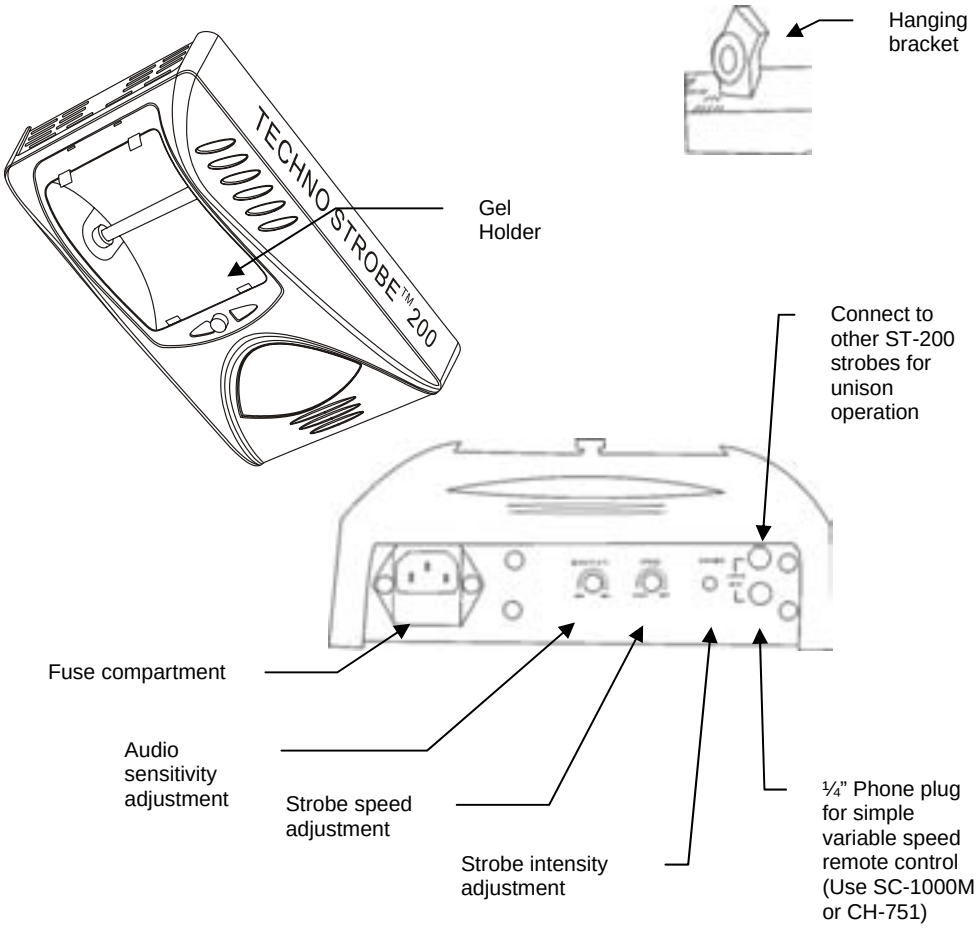

Download from Www.Somanuals.com. All Manuals Search And Download.

SETUP

Lamp

The xenon 200 watt lamp comes pre-installed from the factory.

Warning! ***When replacing the lamp, please wait 15 minutes after powering down to allow the unit to cool down! Always disconnect from main power prior to lamp replacement.***
Do not touch the envelope (glass area) of the bulb with bare hands. If this happens, clean the lamp with alcohol and wipe it with a lint free cloth before installation.

LAMP INSTALLATION

1) Unscrew the three most left and right screws on the back of the ST-200X and lift the front cover carefully. The segment display can remain attached to the PCB during lamp replacement.
2) Unscrew the three lamp wires from their respective terminals on the PCB as illustrated in Figure 3. You may need to clip the tie-wraps that restrain the loose wires to the screw posts on the PCB in order to free the lamp.
3) Slide lamp socket out of the thin metal plate one end at a time.
4) Replace strobe with new lamp and re-fasten wires to the terminals. (CHAUVET lamp model # BL-200ST)

ST-200 Lamp Installation

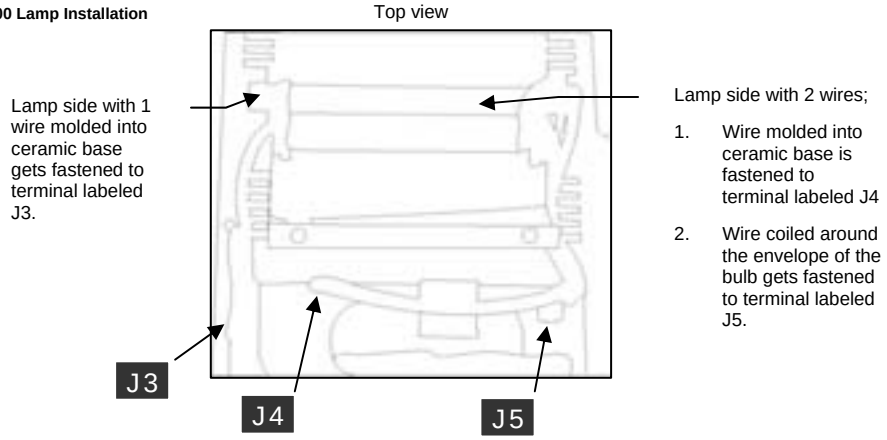

5) Replace front cover and screws.

Download from Www.Somanuals.com. All Manuals Search And Download.

Mounting

ORIENTATION

This fixture may be mounted in any position provided there is adequate room for ventilation. It is also possible to stand this fixture using the removable feet provided.

RIGGING

It is important never to obstruct the fan or vents pathway. Mount the fixture using, a suitable “C” or “O” type clamp. Adjust the angle of the fixture by loosening both knobs and tilting the fixture. After finding the desired position, retighten both knobs.

- When selecting installation location, take into consideration lamp replacement access and routine maintenance.
- Safety cables should always be used.
- Never mount in places where the fixture will be exposed to rain, high humidity, extreme temperature changes or restricted ventilation.

Figure 1 - Hanging Bracket

Note!
Clamp is sold separately.

Using a Color Gel

The ST-200 is equipped with a detachable clear front cover that doubles as a gel holder as illustrated below.

1) Open the clear lamp cover by removing the thumbscrew.
2) Cut a piece of gel filter to match the size of the cover or slightly larger. The size of the gel used in the illustration was a 6.5” by 6.5”.
3) Lay the gel over the opening, close cover and replace the thumbscrew securely.

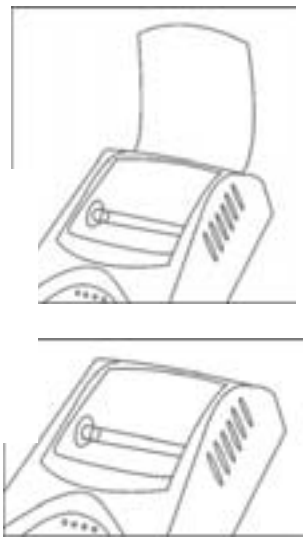

Download from Www.Somanuals.com. All Manuals Search And Download.

OPERATING INSTRUCTIONS

Operating Modes

- A stand-alone mode will listen to sound and strobe to the beat.
- Master/Slave output provides for unison triggering of chained strobes.

STAND ALONE

The Stand Alone mode is activated automatically when the fixture is absent of a CH-751 or a SC-1000M controller. The strobe speed, strobe intensity and the microphone sensitivity can all be adjusted and they are located on the bottom of the ST-200.

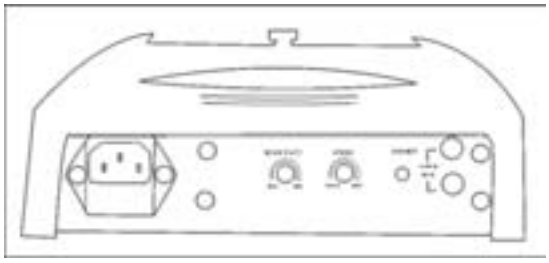

UNISON STROBE

The Unison strobe mode will allow you to link additional units in a daisy chain fashion. Simply connect each fixture in a daisy like fashion using a ¼" MONO phone cable.

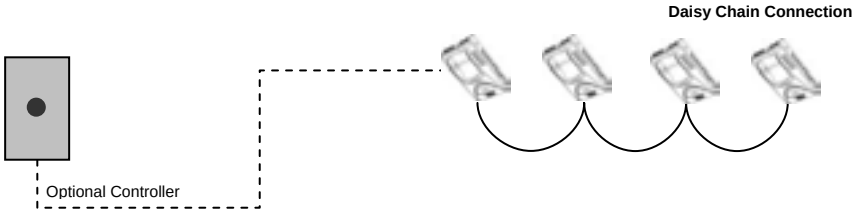

Download from Www.Somanuals.com. All Manuals Search And Download.

APPENDIX

Maintenance

To maintain optimum performance and minimize wear fixtures should be cleaned frequently. Usage and environment are contributing factors in determining frequency. As a general rule, fixtures should be cleaned at least twice a month. Dust build up reduces light output performance and can cause overheating. This can lead to reduced lamp life and increased mechanical wear. Be sure to power off fixture before conducting maintenance.

Unplug fixture from power. Use a vacuum or air compressor and a soft brush to remove dust collected on external vents and internal components. Clean all glass when the fixture is cold with a mild solution of glass cleaner or Isopropyl Alcohol and a soft lint free cotton cloth or lens tissue. Apply solution to the cloth or tissue and drag dirt and grime to the outside of the lens. Gently polish optical surfaces until they are free of haze and lint. Do not to touch the lamp glass when cleaning fixture. Oil and dirt can cause damage and premature aging of the lamp. In the event that the lamp is touched or becomes dirty, clean the lamps with an alcohol wipe.

The cleaning of internal and external optical lenses and/or mirrors must be carried out periodically to optimize light output. Cleaning frequency depends on the environment in which the fixture operates: damp, smoky or particularly dirty surrounding can cause greater accumulation of dirt on the unit's optics. Clean with soft cloth using normal glass cleaning fluid. - Always dry the parts carefully. - Clean the external optics at least every 20 days. Clean the internal optics at least every 30/60 days.

Returns Procedure

Returned merchandise must be sent prepaid and in the original packing, call tags will not be issued. Package must be clearly labeled with a Return Merchandise Authorization Number (RA #). Products returned without an RA # will be refused. Call CHAUVET and request RA # prior to shipping the fixture. Be prepared to provide the model number, serial number and a brief description of the cause for the return. Be sure to properly pack fixture, any shipping damage resulting from inadequate packaging is the customer's responsibility. CHAUVET reserves the right to use its own discretion to repair or replace product(s). As a suggestion, proper UPS packing or double-boxing is always a safe method to use.

Claims

Damage incurred in shipping is the responsibility of the shipper; therefore the damage must be reported to the carrier upon receipt of merchandise. It is the customer's responsibility to notify and submit claims with the shipper in the event that a fixture is damaged due to shipping. Any other claim for items such as missing component/part, damage not related to shipping, and concealed damage, must be made within seven (7) days of receiving merchandise.

Download from Www.Somanuals.com. All Manuals Search And Download.

General Troubleshooting

Symptom	Solution(s)	Applies to			
		Lights	Foggers & Snow	Controllers	Dimmers & Chaser
Auto shut off	Check fan thermal switch reset	✓			
Beam is very dim or not bright	Clean optical system or replace lamp Check 220/110v switch for proper setting	✓			
Breaker/Fuse keeps blowing	Check total load placed on device				✓
Chase is too slow	Check users manual for speed adjustment	✓		✓	✓
Device has no power	Check for power on Mains. Check device's fuse. (internal and/or external)	✓		✓	✓
Fixture is on but there is no movement to the audio	Make sure you have the correct audio mode on the control switches. If audio provided via ¼" jack, make sure a live audio signal exists Adjust sound sensitivity knob	✓		✓	✓
Lamps cuts off sporadically	Possible bad lamp or fixture is overheating. Lamp may be at end of its life.	✓			
Light will not come on after power failure	Some discharge lamps require a cooling off period before the electronics in the fixture can kick start it again, wait 5 to 10 minutes before powering up	✓			
Loss of signal	Use only DMX cables Install terminator Note: Keep DMX cables separated from power cables or black lights.	✓	✓	✓	✓
Moves slow	Check 220/110v switch for proper setting	✓			
No flash	Re-install bulb, may have shifted in shipping	✓			
No light output	Check slip ring & brushes for contact Install bulb Call service technician	✓			
Relay will not work	Check reset switch Check cable connections				✓
Remote does not work	Make sure connector is firmly connected to device	✓	✓		
Stand alone mode	All Chauvet lighting fixtures featuring stand-alone functions do not require additional settings, simply power the fixture and it will automatically enter into this mode	✓			

Download from Www.Somanuals.com. All Manuals Search And Download.

Technical Specifications

WEIGHT & DIMENSIONS

Length..... 330 mm (13 in)
Width ..... 205 mm (8.1 in)
Height .....100 mm (4 in)
Weight ..... 2.24 Kg (4.93 lbs)

POWER

Operating Range .....115V 60 Hz or 230V 50 Hz
AC input.....3 prongs IEC 60320 C14

LAMP

Xenon (BL-200ST) 200W

THERMAL

Maximum ambient temperature..... 40° (104° F)

FUSE

Main..... 20mm Glass 3A Fast Blow

CONTROL & PROGRAMMING

Remote Controller Input ..... ¼" MONO phone plug
Output..... ¼" MONO phone plug

ORDERING INFORMATION

Techno Strobe™ 200 .....ST-200
Techno Strobe™ Replacement Bulb.....BL-200ST
1 Channel Strobe Controller..... CH-751
4 Channel Strobe Controller..... SC-1000mono
Fuse 3A P170FUSE003

Download from Www.Somanuals.com. All Manuals Search And Download.

Free Manuals Download Website

http://myh66.com

http://usermanuals.us

http://www.somanuals.com

http://www.4manuals.cc

http://www.manual-lib.com

http://www.404manual.com

http://www.luxmanual.com

http://aubethermostatmanual.com

Golf course search by state

http://golfingnear.com

Email search by domain

http://emailbydomain.com

Auto manuals search

http://auto.somanuals.com

TV manuals search

http://tv.somanuals.com