LZ-NH2500N Bracket

Typical mounting on IN-SWINGING door

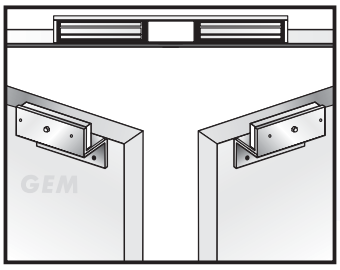

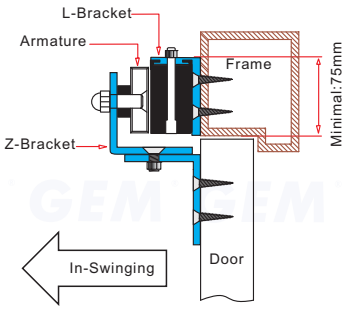

■ Application for the Electromagnet:
EM-NH2500 Series

RoHS Compliant

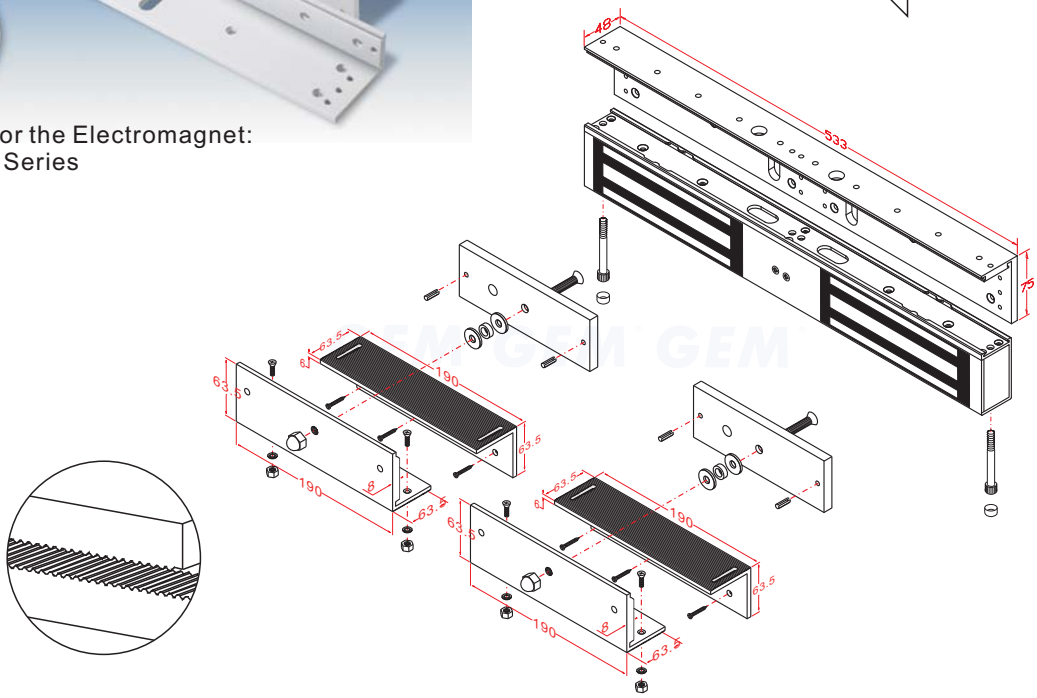

Unit:mm

Installation Steps of LZ bracket for In-swinging doors

1

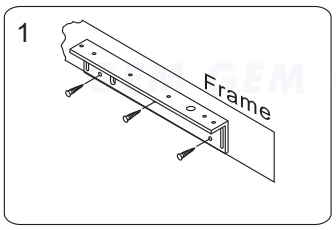

Find a mounting location on the door frame for the L bracket. Make sure that the door is still closeable.

2

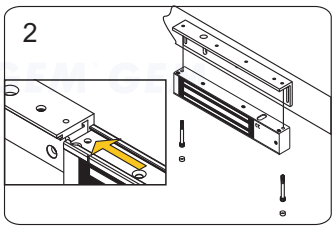

Slide the electromagnetic lock to fit with the mounting plate and tighten the electromagnetic lock on the L bracket.

3

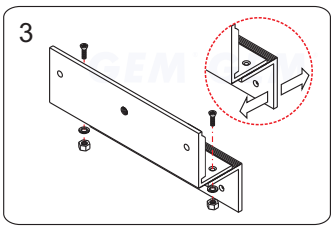

Assemble the Z bracket, and make sure that the Z bracket is adjustable.

4

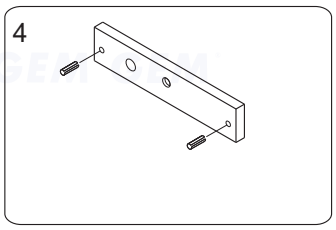

Insert the guide pins into the armature plate.

5

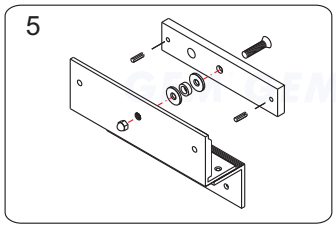

Put one rubber washer between armature plate and the Z bracket.

6

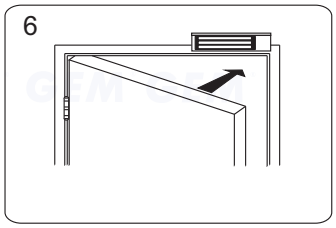

Close the door. Measure the correct position by bringing the armature plate close to the contact surface of the electromagnetic lock.

7

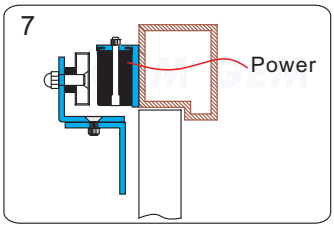

Turn on the power of EM-Lock, and let the armature plate bonds to the EM-lock. Adjust the position between the Z bracket and the door frame.

Finish

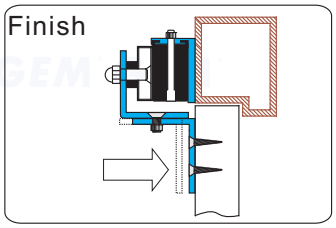

Once the position is correct, use the screws to permanently mount the Z bracket on the door frame. This should be the last step.

GIANNI INDUSTRIES, INC.

No. 13, Zhong Sing Road, Tu-Cheng Industrial Zone,
Tu-Cheng City, Taipei, Taiwan 23678
Tel: 886-2 2267 7986 / Fax: 886-2 2267 9876
E-Mail: info@gianni.com.tw
Website: gianni.tw

Copyright 2008 Gianni industries, inc. All rights reserved.

DM-CA-LZ-NH2500N Ver. A Published on 2008.06.18

The products are manufactured under an ISO 9001 & QC 080000 Certified Quality Management Program environment back its product quality, performance and commitment to customer satisfaction.

Download from Www.Somanuals.com. All Manuals Search And Download.

Free Manuals Download Website

http://myh66.com

http://usermanuals.us

http://www.somanuals.com

http://www.4manuals.cc

http://www.manual-lib.com

http://www.404manual.com

http://www.luxmanual.com

http://aubethermostatmanual.com

Golf course search by state

http://golfingnear.com

Email search by domain

http://emailbydomain.com

Auto manuals search

http://auto.somanuals.com

TV manuals search

http://tv.somanuals.com