Allegro²E

Widespread Lavatory Set / Mélangeur 3 trous pour lavabo / Batéria americana para lavabo

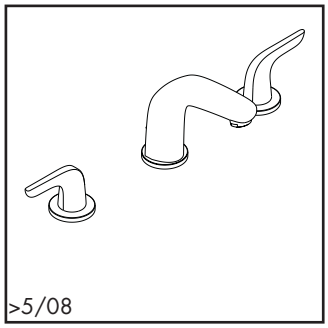

04182XX0

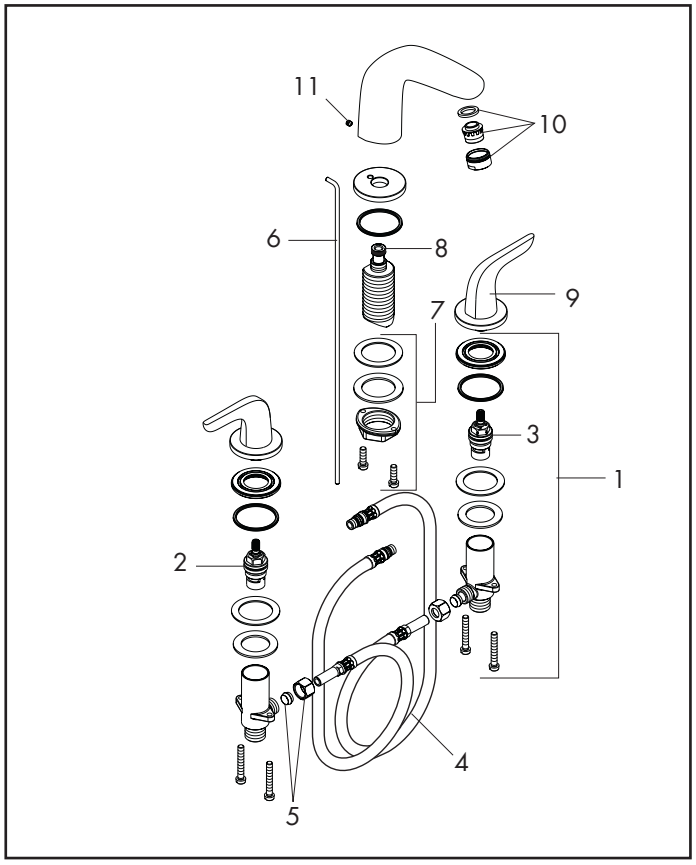

Pos.	Description	Description	Denominación	No./Nr./N°		
1	valve set	robinett d'arrêt cpl	Valvula completa	97960001		
2	hot cartridge	mécanisme eau chaude	Montura agua caliente	94009000		
3	cold cartridge	mécanisme eau froide	Montura agua fría	94008000		
4	connection hose	raccordements	Conexión	96321001		
5	3/8" compression fitting	raccord a bague sertie	tuercas giferia	88513000		
6	pull rod	tirette	Tirador completo	96657XX0		
7	fixing set	fixation	Set de fijación completo	13951000		
8	o-ring 11x2	joint torique 11x2	Junta toroidal 11x2	98127000		
9	handle	poignée Allegro²	Mando Allegro²			
10	aerator	mousseur	Aireador completo			
11	screw	vis	Tornillo			
	drain	vidage lavabo	Vaciadores	88509XX0		

XX = Please see page 9.1 for finish
XX = Description des codes couleur page 9.1
XX = Para el código de acabados ver página 9.1

Download from Www.Somanuals.com. All Manuals Search And Download.

Free Manuals Download Website

http://myh66.com

http://usermanuals.us

http://www.somanuals.com

http://www.4manuals.cc

http://www.manual-lib.com

http://www.404manual.com

http://www.luxmanual.com

http://aubethermostatmanual.com

Golf course search by state

http://golfingnear.com

Email search by domain

http://emailbydomain.com

Auto manuals search

http://auto.somanuals.com

TV manuals search

http://tv.somanuals.com