9800001046

PARTS GUIDE

STOP

Using the Parts Guide below, check to make sure all parts are included in the box.
If parts are missing or damaged call 1-888-830-1326.
PLEASE DO NOT RETURN THIS PRODUCT TO THE STORE.

Before installing your fan, record the following information for your records and warranty assistance.

Fan Parts

(Not Drawn to Scale)

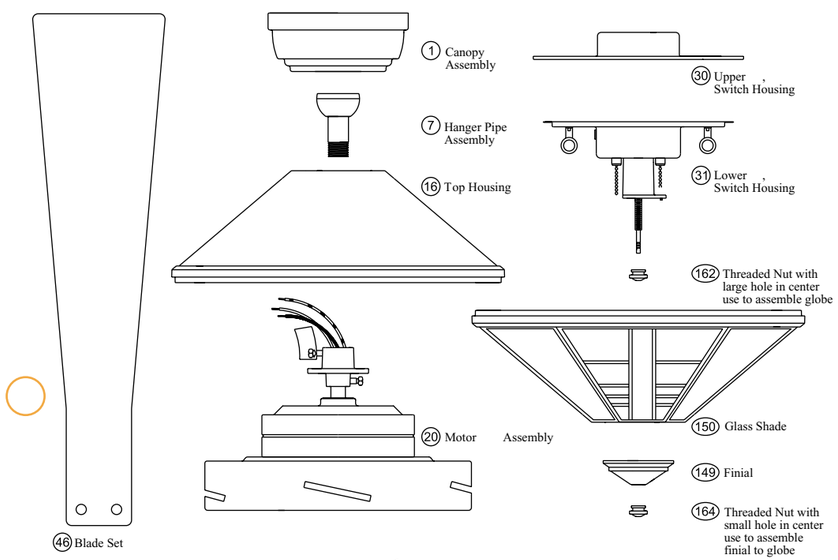

Hardware

(Drawn to Scale)

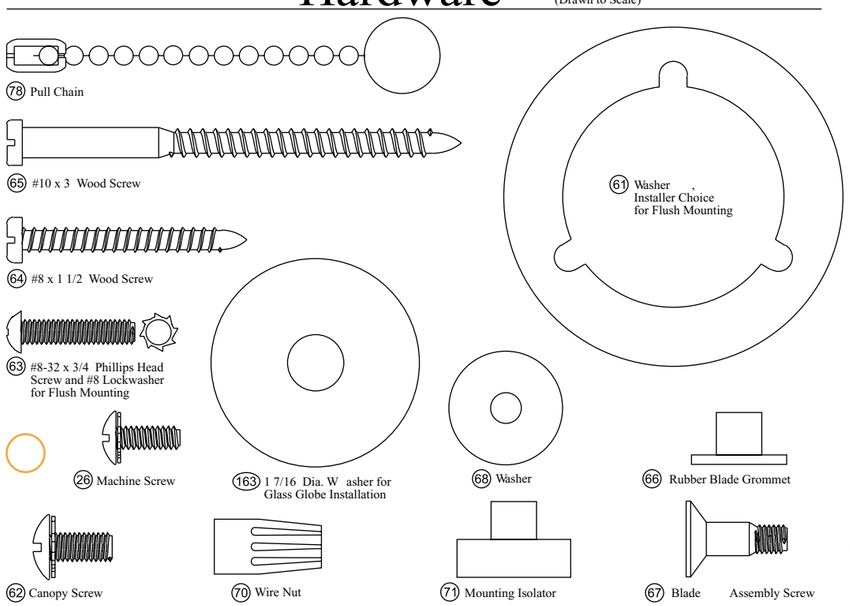

Model Name _____

Catalog No. _____

Serial No. _____

Date Purchased _____

Where Purchased _____

Missing / Broken Parts:
Call 1-888-830-1326

Fan does not work:
1. Reference the Trouble Shooting guide in your Instruction Manual.
2. Call your Local Service Center.
3. Call Technical Support at 901-248-2222.

For additional information on:
Hunter Products • Trouble Shooting
Dealer Location • Service Center Locator
Call 1-800-448-6837
www.hunterfan.com

FOR USE BY AUTHORIZED HUNTER SERVICE CENTERS ONLY

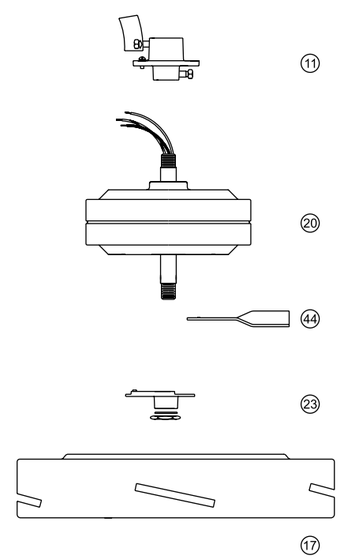

Parts List

		Model #	21970	21973	21978	21977	21888
		Asm. Dwg. #	92629-01	92629-02	92629-03	92629-04	92629-05
		Finish	Burnished Brass	Verde	Bronze	Textured White	Bronze
Item #	**Item Name**	**Qnty**	**Part #**	**Part #**	**Part #**	**Part #**	**Part #**
1	*** Canopy Assembly**	**1**	**92629-00-860**	**92629-00-861**	**92629-00-862**	**92629-00-863**	**92629-00-864**
2	Hanger Bracket Assembly	1	84102-01-000	84102-01-000	84102-01-000	84102-01-000	84102-01-000
3	Canopy	1	92599-01-127	92599-01-152	92599-01-195	92599-01-157	92599-01-195
7	**Hanger Pipe Assembly**	**1**	**63722-16-000**	**63722-14-000**	**63722-17-000**	**63722-06-000**	**63722-17-000**
47	**Screw, Blade Iron Armature**	**11**	**63755-01-000**	**63755-01-000**	**63755-01-000**	**63755-01-000**	**63755-01-000**
38	* Break Away Connector	2	73384-01-000	73384-01-000	73384-01-000	73384-02-000	73384-01-000
37	* Reversing Assembly Switch	1	08189-02-000	08189-02-000	08189-02-000	08189-02-000	08189-02-000
194	Switch, Pull Reversing	1	73987-01-000	73987-01-000	73987-01-000	73987-02-000	73987-01-000
195	Bushing- Plastic	2	63956-01-000	63956-01-000	63956-01-000	63956-01-000	63956-01-000
36	Switch, Fan Speed Pull Chain	1	63784-01-000	63784-01-000	63784-01-000	63784-01-000	63784-01-000
141	Socket Assembly	2	64043-01-000	64043-01-000	64043-01-000	64043-01-000	64043-01-000
151	Switch, 2 Way	1	08173-03-000	08173-03-000	08173-03-000	08173-04-000	08173-03-000
145	Globe Fitter	1	92631-02-127	92631-02-152	92631-02-169	92631-02-157	92631-02-169
78	Pull Chain	2	63914-01-000	63914-01-000	63914-01-000	63914-02-000	63914-01-000
44	**Blade Iron Set**	**1**	**84188-01-156**	**84188-01-156**	**84188-01-156**	**84188-01-156**	**84188-01-156**
46	**Blade Set**	**1**	**84211-02-000**	**84211-02-000**	**84211-01-000**	**84211-03-000**	**84211-01-000**
150	**Globe/Shade**	**1**	**92639-01-000**	**92639-02-000**	**92639-03-000**	**92639-04-000**	**92639-03-000**
149	**Finial**	**1**	**84194-01-127**	**84194-01-152**	**84194-01-195**	**84194-01-157**	**84194-01-195**
145	**Globe Fitter**	**1**	**73988-01-000**	**73988-02-000**	**73988-03-000**	**73988-04-000**	**73988-03-000**
60	*** Hardware Kit**	**1**	**92629-00-860**	**92629-00-861**	**92629-00-862**	**92629-00-863**	**92629-00-864**
67	Screw, Blade Assembly	11	63730-01-000	63730-01-000	63730-01-000	63730-01-000	63730-01-000
119	Blade Grommet - Lower	11	63975-01-000	63975-01-000	63975-01-000	63975-01-000	63975-01-000
163	Washer	1	73788-01-000	73788-01-000	73788-01-000	73788-01-000	73788-01-000
70	* Wire Nut	4	05172-01-000	05172-01-000	05172-01-000	05172-01-000	05172-01-000
75	* Balancing Kit	1	07570-01-000	07570-01-000	07570-01-000	07570-01-000	07570-01-000
81	* Warranty Card (English)	1	41187-01-000	41187-01-000	41187-01-000	41187-01-000	41187-01-000
82	* Warranty Card (Spanish)	1	41187-02-000	41187-02-000	41187-02-000	41187-02-000	41187-02-000
101	* Owners Manual (English)	1	41343-01-000	41343-01-000	41343-01-000	41343-01-000	41343-01-000
102	* Owners Manual (Spanish)	1	41343-02-000	41343-02-000	41343-02-000	41343-02-000	41343-02-000
120	* Site Prep Guide (English)	1	41278-01-000	41278-01-000	41278-01-000	41278-01-000	41278-01-000
121	* Site Prep Guide (Spanish)	1	41278-02-000	41278-02-000	41278-02-000	41278-02-000	41278-02-000

Hunter Fan Company
2500 Frisco Avenue
Memphis, TN 38114
www.hunterfan.com

Download from Www.Somanuals.com. All Manuals Search And Download.

Free Manuals Download Website

http://myh66.com

http://usermanuals.us

http://www.somanuals.com

http://www.4manuals.cc

http://www.manual-lib.com

http://www.404manual.com

http://www.luxmanual.com

http://aubethermostatmanual.com

Golf course search by state

http://golfingnear.com

Email search by domain

http://emailbydomain.com

Auto manuals search

http://auto.somanuals.com

TV manuals search

http://tv.somanuals.com